BS EN 1870-16:2012

BSI Standards Publication

Safety of woodworking machines — Circular sawing machines

Part 16: Double mitre sawing machines for V cutting

bsi.

...making excellence a habit.™

Document Sharing Hub

Full document details: BS EN 1870-16:2012

National foreword

This British Standard is the UK implementation of EN 1870-16:2012. It supersedes BS EN 1870-16:2005+A1:2009 which is withdrawn.

The UK participation in its preparation was entrusted to Technical Committee MTE/23, Woodworking machines.

A list of organizations represented on this committee can be obtained on request to its secretary.

This publication does not purport to include all the necessary provisions of a contract. Users are responsible for its correct application.

© The British Standards Institution 2012. Published by BSI Standards Limited 2012

ISBN 978 0 580 72428 2

ICS 79.120.10

Compliance with a British Standard cannot confer immunity from legal obligations.

This British Standard was published under the authority of the Standards Policy and Strategy Committee on 31 October 2012.

Amendments issued since publication

Date	Text affected

Documents
Document Sharing Hub

Full document details: BS EN 1870-16:2012

EUROPEAN STANDARD

NORME EUROPÉENNE

EUROPÄISCHE NORM

EN 1870-16

October 2012

ICS 79.120.10

Supersedes EN 1870-16:2005+A1:2009

English Version

Safety of woodworking machines - Circular sawing machines - Part 16: Double mitre sawing machines for V cutting

Sécurité des machines pour le travail du bois - Machines à scies circulaires - Partie 16 : Tronçonneuses doubles à coupe en V

Sicherheit von Holzbearbeitungsmaschinen - Kreissägemaschinen - Teil 16: Klinkschnittkreissägemaschinen

This European Standard was approved by CEN on 4 August 2012.

CEN members are bound to comply with the CEN/CENELEC Internal Regulations which stipulate the conditions for giving this European Standard the status of a national standard without any alteration. Up-to-date lists and bibliographical references concerning such national standards may be obtained on application to the CEN-CENELEC Management Centre or to any CEN member.

This European Standard exists in three official versions (English, French, German). A version in any other language made by translation under the responsibility of a CEN member into its own language and notified to the CEN-CENELEC Management Centre has the same status as the official versions.

CEN members are the national standards bodies of Austria, Belgium, Bulgaria, Croatia, Cyprus, Czech Republic, Denmark, Estonia, Finland, Former Yugoslav Republic of Macedonia, France, Germany, Greece, Hungary, Iceland, Ireland, Italy, Latvia, Lithuania, Luxembourg, Malta, Netherlands, Norway, Poland, Portugal, Romania, Slovakia, Slovenia, Spain, Sweden, Switzerland, Turkey and United Kingdom.

EUROPEAN COMMITTEE FOR STANDARDIZATION
COMITÉ EUROPÉEN DE NORMALISATION
EUROPÄISCHES KOMITEE FÜR NORMUNG

Management Centre: Avenue Marnix 17, B-1000 Brussels

© 2012 CEN All rights of exploitation in any form and by any means reserved worldwide for CEN national Members.

Ref. No. EN 1870-16:2012: E

Documents
Document Sharing Hub

Full document details: BS EN 1870-16:2012

Contents

Page

Foreword 4

Introduction 6

1 Scope 7

2 Normative references 7

3 Terms and definitions 9
3.1 General 9
3.2 Terms 10
3.3 Definitions 11

4 List of significant hazards 14

5 Safety requirements and/or measures 17
5.1 General 17
5.2 Controls 17
5.2.1 Safety and reliability of control systems 17
5.2.2 Position of controls 18
5.2.3 Starting 19
5.2.4 Normal stopping 20
5.2.5 Emergency stop 21
5.2.6 Mode selection 21
5.2.7 Failure of the power supply 22
5.3 Protection against mechanical hazards 22
5.3.1 Stability 22
5.3.2 Hazards of break-up during operation 22
5.3.3 Tool holder and tool design 23
5.3.4 Braking 24
5.3.5 Devices to minimise the possibility or the effect of ejection 25
5.3.6 Workpiece supports and guides 25
5.3.7 Prevention of access to moving parts 26
5.3.8 Workpiece clamping devices 30
5.4 Protection against non-mechanical hazards 31
5.4.1 Fire 31
5.4.2 Noise 32
5.4.3 Emission of chips and dust 33
5.4.4 Electricity 34
5.4.5 Ergonomics and handling 34
5.4.6 Pneumatics 35
5.4.7 Electromagnetic compatibility 35
5.4.8 Static electricity 35
5.4.9 Errors of fitting 35
5.4.10 Supply disconnection (Isolation) 35
5.4.11 Maintenance 36

6 Information for use 36
6.1 General 36
6.2 Warnings and warning devices 36
6.3 Marking 37
6.4 Instruction handbook 37

Annex A (normative) **Saw spindle dimensional tolerances** 42

Annex B (normative) **Braking tests** 43

Documents
Document Sharing Hub

Full document details: BS EN 1870-16:2012

B.1 Conditions for all tests 43
B.2 Tests 43
B.2.1 Un-braked run-down time 43
B.2.2 Braked run down time 43

Annex C (normative) **Impact test method for guards** 44
C.1 General 44
C.2 Test method 44
C.2.1 Preliminary remarks 44
C.2.2 Testing equipment 44
C.2.3 Projectile for guards 44
C.2.4 Sampling 44
C.2.5 Test procedure 44
C.3 Results 45
C.4 Assessment 45
C.5 Test report 45
C.6 Test equipment for impact test 45

Annex ZA (informative) **Relationship between this European Standard and the Essential Requirements of EU Directive 2006/42/EC** 47

Bibliography 50

Documents
Document Sharing Hub

Full document details: BS EN 1870-16:2012

Foreword

This document (EN 1870-16:2012) has been prepared by Technical Committee CEN/TC 142 “Woodworking machines - Safety”, the secretariat of which is held by UNI.

This European Standard shall be given the status of a national standard, either by publication of an identical text or by endorsement, at the latest by April 2013, and conflicting national standards shall be withdrawn at the latest by April 2013.

Attention is drawn to the possibility that some of the elements of this document may be the subject of patent rights. CEN [and/or CENELEC] shall not be held responsible for identifying any or all such patent rights.

This document supersedes EN 1870-16:2005+A1:2009.

This document has been prepared under a mandate given to CEN by the European Commission and the European Free Trade Association, and supports essential requirements of the Machinery Directive.

For relationship with EU Directive 2006/42/EC, see informative Annex ZA, which is an integral part of this document.

The main modification to the 2009 edition relates to the introduction of performance levels (PL).

Organisations contributing to the preparation of this document include European Committee of Woodworking Machinery Manufacturers Association "EUMABOIS".

EN 1870, *Safety of woodworking machines — Circular sawing machines*, consists of the following parts:

— *Part 1: Circular saw benches (with and without sliding table), dimension saws and building site saws*;

— *Part 3: Down cutting cross-cut saws and dual purpose down cutting cross-cut saws/circular saw benches*;

— *Part 4: Multiblade rip sawing machines with manual loading and/or unloading*;

— *Part 5: Circular sawbenches/up-cutting cross-cut sawing machines*;

— *Part 6: Circular sawing machines for firewood and dual purpose circular sawing machines for firewood/circular saw benches, with manual loading and/or unloading*;

— *Part 7: Single blade log sawing machines with integrated feed table and manual loading and/or unloading*;

— *Part 8: Single blade edging circular rip sawing machines with power driven saw unit and manual loading and/or unloading*;

— *Part 9: Double blade circular sawing machines for cross-cutting with integrated feed and with manual loading and/or unloading*;

— *Part 10: Single blade automatic and semi-automatic up-cutting cross-cut sawing machines*;

— *Part 11: Semi-automatic and automatic horizontal cross-cut sawing machines with one saw unit (radial arm saws)*;

— *Part 12: Pendulum cross-cut sawing machines*;

Documents
Document Sharing Hub
Full document details: BS EN 1870-16:2012

— *Part 13: Horizontal beam panel sawing machines*;

— *Part 14: Vertical panel sawing machines*;

— *Part 15: Multi-blade cross-cut sawing machines with integrated feed of the workpiece and manual loading and/or unloading*;

— *Part 16: Double mitre sawing machines for V-cutting*;

— *Part 17: Manual horizontal cutting cross-cut sawing machines with one saw unit (radial arm saws)*;

— *Part 18: Dimension saws* (at Enquiry stage at the time of publication of the present document);

— *Part 19: Circular saw benches (with and without sliding table) and building site saws* (at Enquiry stage at the time of publication of the present document).

The documents produced by CEN/TC 142 are particular to woodworking machines and complement the relevant A and B standards on the subject of general safety (see EN ISO 12100:2010, Introduction for a description of A, B and C standards).

According to the CEN/CENELEC Internal Regulations, the national standards organisations of the following countries are bound to implement this European Standard: Austria, Belgium, Bulgaria, Croatia, Cyprus, Czech Republic, Denmark, Estonia, Finland, Former Yugoslav Republic of Macedonia, France, Germany, Greece, Hungary, Iceland, Ireland, Italy, Latvia, Lithuania, Luxembourg, Malta, Netherlands, Norway, Poland, Portugal, Romania, Slovakia, Slovenia, Spain, Sweden, Switzerland, Turkey and the United Kingdom.

Documents
Document Sharing Hub
Full document details: BS EN 1870-16:2012

Introduction

This document has been prepared to be a harmonised standard to provide one means of conforming to the essential safety requirements of the Machinery Directive, and associated EFTA regulations.

This document is a type C standard as stated in EN ISO 12100:2010.

The machinery concerned and the extent to which hazards, hazardous situations and events are covered are indicated in the scope of this document.

When provisions of this type C standard are different from those which are stated in type A or B standards, the provisions of this C type standard take precedence over the provisions of other standards, for machines that have been designed and built in accordance with the requirements of the provisions of this type C standard.

The requirements of this document are directed to manufacturers and their authorised representatives of double mitre sawing machines for V-cutting. They are also useful for designers.

This document also includes information to be provided by the manufacturer to the user.

Common requirements for tooling are given in EN 847-1:2005+A1:2007.

Documents
Document Sharing Hub

Full document details: BS EN 1870-16:2012

1 Scope

This European Standard specifies all significant hazards, hazardous situations and events as listed in Clause 4 which are relevant to double mitre sawing machines for V-cutting with a maximum cutting capacity (width and height) of ≤ 200 mm, fitted or not with pneumatic systems, hereinafter referred to as the machine, designed to cut solid wood, chipboard, fibreboard or plywood and also these materials where they are covered with plastic laminate or edgings, when they are used as intended and under the conditions foreseen by the manufacturer including reasonably foreseeable misuse.

The requirements of this document apply to stationary and displaceable double mitre saw for V-cutting (see 3.3.3 and 3.3.4).

The requirements of this document apply to all machines whatever their method of control, e.g. electromechanical and/or electronic.

This document does not apply to transportable mitre saws or any adaptation permitting their use in a different mode, i.e. bench mounting.

NOTE 1 Transportable motor-operated electric single blade mitre saws are covered by the requirements of EN 61029-1:2009 and EN 61029-2-9:2009.

This document is not applicable to double mitre sawing machines for V-cutting fitted with hydraulic system.

This document is not applicable to double mitre sawing machines for V-cutting which are manufactured before the date of its publication as EN.

NOTE 2 Machines covered by this document are listed under 1.4 of Annex IV of the Machinery Directive.

2 Normative references

The following documents, in whole or in part, are normatively referenced in this document and are indispensable for its application. For dated references, only the edition cited applies. For undated references, the latest edition of the referenced document (including any amendments) applies.

EN 574:1996+A1:2008, *Safety of machinery — Two-hand control devices — Functional aspects — Principles for design*

EN 614-1:2006+A1:2009, *Safety of machinery — Ergonomic design principles — Part 1: Terminology and general principles*

EN 614-2:2000+A1:2008, *Safety of machinery — Ergonomic design principles — Part 2: Interactions between the design of machinery and work tasks*

EN 847-1:2005+A1:2007, *Tools for woodworking — Safety requirements — Part 1: Milling tools, circular saw blades*

EN 894-1:1997+A1:2008, *Safety of machinery — Ergonomics requirements for the design of displays and control actuators — Part 1: General principles for human interactions with displays and control actuators*

EN 894-2:1997+A1:2008, *Safety of machinery — Ergonomics requirements for the design of displays and control actuators — Part 2: Displays*

EN 894-3:2000+A1:2008, *Safety of machinery — Ergonomics requirements for the design of displays and control actuators — Part 3: Control actuators*

Documents
Document Sharing Hub

Full document details: BS EN 1870-16:2012

EN 1005-1:2001+A1:2008, *Safety of machinery — Human physical performance — Part 1: Terms and definitions*

EN 1005-2:2003+A1:2008, *Safety of machinery — Human physical performance — Part 2: Manual handling of machinery and component parts of machinery*

EN 1005-3:2002+A1:2008, *Safety of machinery — Human physical performance — Part 3: Recommended force limits for machinery operation*

EN 1005-4:2005+A1:2008, *Safety of machinery — Human physical performance — Part 4: Evaluation of working postures and movements in relation to machinery*

EN 1037:1995+A1:2008, *Safety of machinery — Prevention of unexpected start-up*

EN 1088:1995+A2:2008, *Safety of machinery — Interlocking devices associated with guards — Principles for design and selection*

EN 1760-1:1997+A1:2009, *Safety of machinery — Pressure sensitive protective devices — Part 1: General principles for the design and testing of pressure sensitive mats and pressure sensitive floors*

EN 50370-1:2005, *Electromagnetic compatibility (EMC) — Product family standard for machine tools — Part 1: Emission*

EN 50370-2:2003, *Electromagnetic compatibility (EMC) — Product family standard for machine tools — Part 2: Immunity*

EN 60204-1:2006, *Safety of machinery — Electrical equipment of machines — Part 1: General requirements (IEC 60204-1:2005, modified)*

EN 60439-1:1999,[1)] *Low-voltage switchgear and controlgear assemblies — Part 1: Type-tested and partially type-tested assemblies (IEC 60439-1:1999)*

EN 60529:1991,[2)] *Degrees of protection provided by enclosures (IP Code) (IEC 60529:1989)*

EN 61310-1:2008, *Safety of machinery — Indication, marking and actuation — Part 1: Requirements for visual, auditory and tactile signals (IEC 61310-1:2007)*

EN 61800-5-2:2007, *Adjustable speed electrical power drive systems — Part 5-2: Safety requirements — Functional*

CLC/TS 61496-2:2006, *Safety of machinery — Electro-sensitive protective equipment — Part 2: Particular requirements for equipment using active opto-electronic protective devices (AOPDs) (IEC 61496-2:2006)*

EN 61800-5-2:2007, *Adjustable speed electrical power drive systems — Part 5-2: Safety requirements — Functional (IEC 61800-5-2:2007)*

EN ISO 3743-1:2010, *Acoustics — Determination of sound power levels and sound energy levels of noise sources using sound pressure — Engineering methods for small movable sources in reverberant fields — Part 1: Comparison method for a hard-walled test room (ISO 3743-1:2010)*

EN ISO 3743-2:2009, *Acoustics — Determination of sound power levels of noise sources using sound pressure — Engineering methods for small, movable sources in reverberant fields — Part 2: Methods for special reverberation test rooms (ISO 3743-2:1994)*

---

1) EN 60439-1:1999 is amended by EN 60439-1:1999/A1:2004, based on IEC 60439-1:1999/A1:2004.

2) EN 60529:1991 is amended by EN 60529:1991/A1:2000, based on IEC 60529:1989/A1:1999.

Documents
Document Sharing Hub

Full document details: BS EN 1870-16:2012

EN ISO 3744:2010, *Acoustics — Determination of sound power levels and sound energy levels of noise sources using sound pressure — Engineering method in an essentially free field over a reflecting plane (ISO 3744:2010)*

EN ISO 3745:2009,[3] *Acoustics — Determination of sound power levels of noise sources using sound pressure — Precision methods for anechoic and semi-anechoic rooms (ISO 3745:2003)*

EN ISO 3746:2010, *Acoustics — Determination of sound power levels and sound energy levels of noise sources using sound pressure — Survey method using an enveloping measurement surface over a reflecting plane (ISO 3746:2010)*

EN ISO 4414:2010, *Pneumatic fluid power — General rules and safety requirements for systems and their components (ISO 4414:2010)*

EN ISO 4871:2009, *Acoustics — Declaration and verification of noise emission values of machinery and equipment (ISO 4871:1996)*

EN ISO 9614-1:2009, *Acoustics — Determination of sound power levels of noise sources using sound intensity — Part 1: Measurement at discrete points (ISO 9614-1:1993)*

EN ISO 11202:2010, *Acoustics — Noise emitted by machinery and equipment — Determination of emission sound pressure levels at a work station and at other specified positions applying approximate environmental corrections (ISO 11202:2010)*

EN ISO 11204:2010, *Acoustics — Noise emitted by machinery and equipment — Determination of emission sound pressure levels at a work station and at other specified positions applying accurate environmental corrections (ISO 11204:2010)*

EN ISO 11688-1:2009, *Acoustics — Recommended practice for the design of low-noise machinery and equipment — Part 1: Planning (ISO/TR 11688-1:1995)*

EN ISO 12100:2010 *Safety of machinery — General principles for design — Risk assessment and risk reduction (ISO 12100:2010)*

EN ISO 13849-1:2008, *Safety of machinery — Safety-related parts of control systems — Part 1: General principles for design (ISO 13849-1:2006)*

EN ISO 13850:2008, *Safety of machinery — Emergency stop — Principles for design (ISO 13850:2006)*

EN ISO 13857:2008, *Safety of machinery — Safety distances to prevent hazard zones being reached by upper and lower limbs (ISO 13857:2008)*

ISO 7960:1995, *Airborne noise emitted by machine tools — Operating conditions for woodworking machines*

3 Terms and definitions

3.1 General

For the purposes of this document, the terms and definitions given in EN ISO 12100:2010 and the following apply.

3) EN ISO 3745:2009 is superseded by EN ISO 3745:2012.

Documents
Document Sharing Hub
Full document details: BS EN 1870-16:2012

3.2 Terms

The main parts of vertical and horizontal double mitre sawing machines for V-cutting and their terminology are illustrated in Figures 1 and 2.

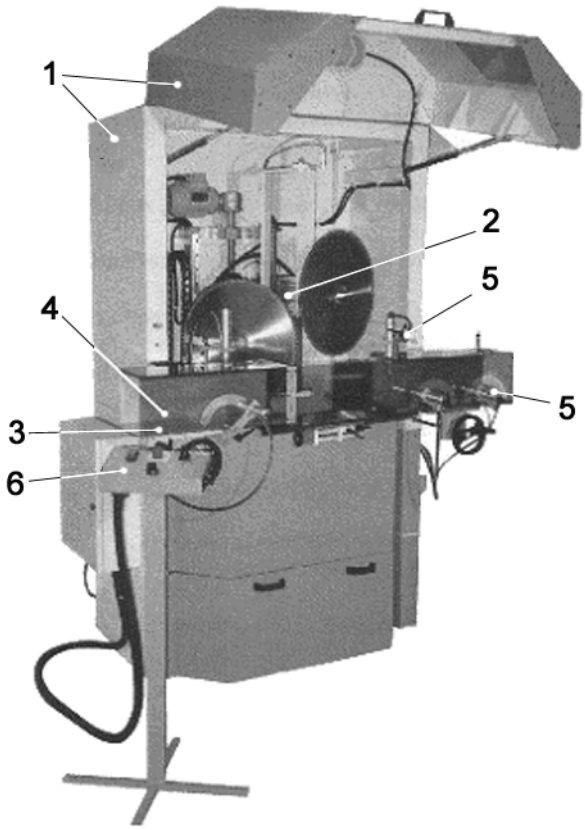

Key

1 enclosure
2 saw unit
3 machine table
4 fence
5 workpiece clamping devices
6 controls

Figure 1 — Terminology of a vertical double mitre sawing machine for V-cutting

Documents
Document Sharing Hub
Full document details: BS EN 1870-16:2012

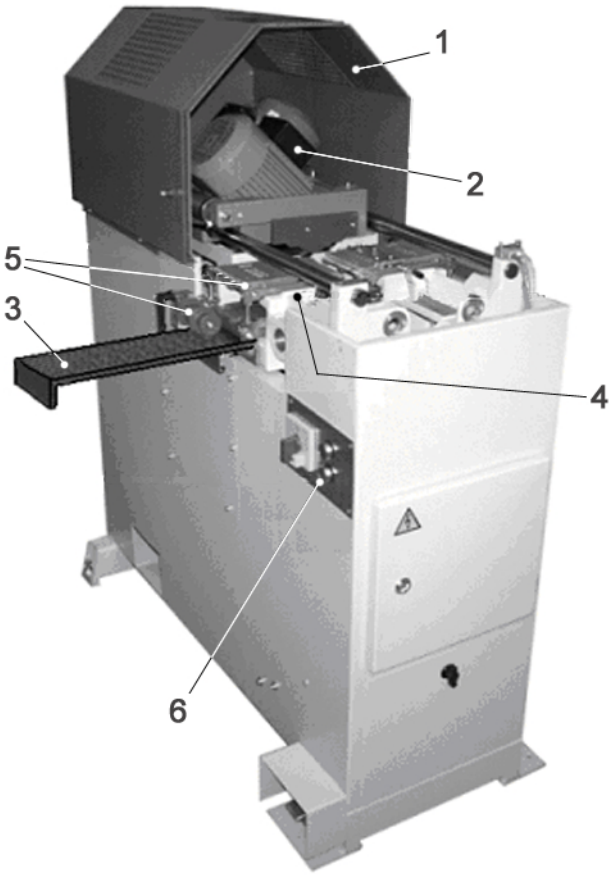

Key

1 enclosure
2 saw unit
3 machine table
4 fence
5 workpiece clamping devices
6 controls

Figure 2 — Terminology of a horizontal double mitre sawing machine for V-cutting

3.3 Definitions

3.3.1
cross-cutting
operation of cutting across the grain of a wooden workpiece

3.3.2
double mitre sawing machine for V-cutting
machine designed to make special cross-cuts for e.g. picture frames, furniture, doors or furnishings, fitted with one saw unit or two saw units (dual stroke machine)

Note 1 to entry: The saw unit consists of one or two saw blades whose spindles are situated above (vertical double mitre sawing machine for V-cutting, see Figure 1) or behind the workpiece (horizontal double mitre sawing machine for V-cutting, see Figure 2) when the saw blades are in their rest positions. The angle between the saw spindle axes can be either fixed (normally 45°) or adjustable from 0° to 45° with respect to the centre line of the machine. The saw blades move into or through the workpiece in vertical or horizontal direction during the cut to produce a V-cut in one cycle. The feed of the saw unit can be manual or integrated feed.

AVA Documents
Document Sharing Hub

Full document details: BS EN 1870-16:2012

3.3.2.1
manual double mitre sawing machine for V-cutting
machine where the saw unit is fed by hand and the workpiece is manually positioned for V-cutting

Note 1 to entry: This type of machine is not covered by Annex IV of the Machinery Directive.

3.3.2.2
dual stroke double mitre sawing machine for V-cutting
machine fitted with two saw units which are situated in their rest position above (dual stroke vertical double mitre sawing machine for V-cutting) or behind the work piece (dual stroke horizontal double mitre sawing machine for V-cutting), where each of the saw units can be moved independently and can be manually moved or have integrated feed

Note 1 to entry: The work piece is manually positioned for V-cutting.

Note 2 to entry: This type of machine is depending from the type of saw unit movement covered by Annex IV of the Machinery Directive (saw unit has integrated feed) or not (saw unit is moved manually).

3.3.2.3
semi-automatic double mitre sawing machine for V-cutting
machine where the saw unit has an integrated feed which is initiated manually and the workpiece is positioned manually for V-cutting

Note 1 to entry: This type of machine is covered by Annex IV of the Machinery Directive.

3.3.2.4
automatic double mitre sawing machine for V-cutting
machine where the saw unit has an integrated feed and the workpiece may be manually loaded and/or unloaded and is automatically positioned for V-cutting to pre-selected lengths

Note 1 to entry: This type of machine is covered by Annex IV of the Machinery Directive if the workpiece can be manually loaded and/or unloaded.

3.3.3
stationary machine
machine designed to be located on or fixed to the floor or other parts of the structure of the premises and to be stationary during use

3.3.4
displaceable machine
machine which is located on the floor, stationary during use and equipped with a device, e.g. wheels, which allows it to be moved between locations

3.3.5
hand feed
manual holding and/or guiding of the workpiece and/or of the saw unit

3.3.6
integrated feed
feed mechanism for the workpiece or tool which is integrated with the machine and where the workpiece or machine element with incorporated tool are held and controlled mechanically during the machining operation

3.3.7
manual loading of power fed machines
operation where the workpiece is presented by the operator directly to the machine integrated feed, e.g. rotating feed rollers, travelling table or reciprocating carriage; i.e. for which there is no intermediate loading device to receive and transfer the workpiece from the operator to the integrated feed

Documents
Document Sharing Hub
Full document details: BS EN 1870-16:2012

3.3.8
manual unloading of power fed machines
operation where the workpiece is removed by the operator directly from the machine out feed; i.e. for which there is no intermediate unloading device to receive and transfer the workpiece from the machine out feed to the operator

3.3.9
cutting area of the saw blades
area of the saw blades where they can be involved in the cutting process

3.3.10
non-cutting area of the saw blades
area of the saw blades where they are not involved in the cutting process

3.3.11
ejection
uncontrolled movement of the workpiece or parts of it or part of the machine from the machine during processing

3.3.12
run-down time
time elapsed from the actuation of the stop control device up to standstill of the saw blade(s) or machine's part(s)

3.3.13
machine actuator
power mechanism used to effect motion of the machine

3.3.14
safety related part of a control system
SRP/CS
part or subpart(s) of a control system that responds to input signals and generates safety-related output signals

Note 1 to entry: The combined safety-related parts of a control system start at the point where the safety-related signals are initiated (including e.g. the actuating cam and the roller of the position switch) and end at the output of the power control elements (including e.g. the main contacts of the contactor). This also includes monitoring systems (EN ISO 13849-1:2008, 3.1.1).

3.3.15
safety function
function of the machine whose failure can result in an immediate increase of the risk(s)

[SOURCE: EN ISO 12100:2010, 3.30]

3.3.16
information from the supplier
statements, sales literature, leaflets or other documents where the manufacturer (or supplier) declares either the characteristics or the compliance of the material or product to a relevant standard

3.3.17
performance level
PL
discrete level used to specify the ability of safety-related parts of control systems to perform a safety function under foreseeable conditions

[SOURCE: EN ISO 13849-1:2008, 3.1.23]

AVA Documents
Document Sharing Hub

Full document details: BS EN 1870-16:2012

4 List of significant hazards

This contains all the significant hazards, hazardous situations and events (see EN ISO 12100:2010), identified by risk assessment as significant for the machines as defined in the scope and which require action to eliminate or reduce the risk.

This document deals with these significant hazards by defining safety requirements and/or measures or by reference to relevant standards.

These hazards are listed in Table 1.

Documents
Document Sharing Hub
Full document details: BS EN 1870-16:2012

Table 1 — List of significant hazards

No	Hazards, hazardous situations and hazardous events	EN ISO 12100:2010	Relevant clause of this document
1	**Mechanical hazards** due to: - machine parts or workpieces:		
	a) shape;	6.2.2.1, 6.2.2.2, 6.3	5.3.3, 5.3.6, 5.3.8, Annex A
	b) relative location;		5.3.3, 5.3.5, 5.3.6, 5.3.7, 5.3.8
	c) mass and stability (potential energy of elements which may move under the effect of gravity);		5.3.7
	d) mass and velocity (kinetic energy of elements in controlled or uncontrolled motion);		5.3.7, 5.3.8
	e) mechanical strength.		5.3.1, 5.3.2, 5.3.3, 5.3.6
	- accumulation of energy inside the machinery :		
	f) elastic elements (springs);	6.2.10, 6.3.5.4	5.3.7
	g) gases under pressure;		5.3.7, 5.3.8
1.1	Crushing hazard		5.3.7, 5.3.8
1.2	Shearing hazard		5.3.7
1.3	Cutting or severing hazard		5.3.7
1.4	Entanglement hazard		5.3.3, 5.3.7
1.5	Drawing-in or trapping hazard		5.3.7
1.6	Impact hazard		5.3.7
1.9	High pressure air ejection hazard	6.2.10	5.4.6
2	**Electrical hazards** due to:		
2.1	Contact of persons with live parts (direct contact)	6.2.9, 6.3.5.4	5.4.4
2.2	Contact of persons with parts which have become live under faulty conditions (indirect contact)	6.2.9	5.4.4

AVA Documents
Document Sharing Hub

Full document details: BS EN 1870-16:2012