BS EN 1870-17:2012+A1:2015

BSI Standards Publication

Safety of woodworking machines — Circular sawing machines

Part 17: Manual horizontal cutting cross-cut sawing machines with one saw unit (radial arm saws)

bsi.

...making excellence a habit.™

Document Sharing Hub

Full document details: BS EN 1870-17:2012+A1:2015

National foreword

This British Standard is the UK implementation of EN 1870-17:2012+A1:2015. It supersedes BS EN 1870-17:2012 which is withdrawn.

The UK participation in its preparation was entrusted to Technical Committee MTE/23, Woodworking machines.

A list of organizations represented on this committee can be obtained on request to its secretary.

This publication does not purport to include all the necessary provisions of a contract. Users are responsible for its correct application.

© The British Standards Institution 2015.
Published by BSI Standards Limited 2015

ISBN 978 0 580 87139 9

ICS 79.120.10

Compliance with a British Standard cannot confer immunity from legal obligations.

This British Standard was published under the authority of the Standards Policy and Strategy Committee on 31 October 2012.

Amendments/corrigenda issued since publication

Date	Text affected
31 May 2015	Implementation of CEN amendment A1:2015

Documents
Document Sharing Hub

Full document details: BS EN 1870-17:2012+A1:2015

EUROPEAN STANDARD

NORME EUROPÉENNE

EUROPÄISCHE NORM

EN 1870-17:2012+A1

April 2015

ICS 79.120.10

Supersedes EN 1870-17:2012

English Version

Safety of woodworking machines - Circular sawing machines - Part 17: Manual horizontal cutting cross-cut sawing machines with one saw unit (radial arm saws)

Sécurité des machines pour le travail du bois - Machines à scies circulaires - Partie 17: Tronçonneuses manuelles à coupe horizontale avec une unité de sciage (scies circulaires radiales manuelles)

Sicherheit von Holzbearbeitungsmaschinen - Kreissägemaschinen - Teil 17: Handbetätigte waagrecht schneidende Auslegerkreissägemaschinen mit einem Sägeaggregat (handbetätigte Radialsägen)

This European Standard was approved by CEN on 4 August 2012 and includes Amendment 1 approved by CEN on 1 March 2015.

CEN members are bound to comply with the CEN/CENELEC Internal Regulations which stipulate the conditions for giving this European Standard the status of a national standard without any alteration. Up-to-date lists and bibliographical references concerning such national standards may be obtained on application to the CEN-CENELEC Management Centre or to any CEN member.

This European Standard exists in three official versions (English, French, German). A version in any other language made by translation under the responsibility of a CEN member into its own language and notified to the CEN-CENELEC Management Centre has the same status as the official versions.

CEN members are the national standards bodies of Austria, Belgium, Bulgaria, Croatia, Cyprus, Czech Republic, Denmark, Estonia, Finland, Former Yugoslav Republic of Macedonia, France, Germany, Greece, Hungary, Iceland, Ireland, Italy, Latvia, Lithuania, Luxembourg, Malta, Netherlands, Norway, Poland, Portugal, Romania, Slovakia, Slovenia, Spain, Sweden, Switzerland, Turkey and United Kingdom.

EUROPEAN COMMITTEE FOR STANDARDIZATION
COMITÉ EUROPÉEN DE NORMALISATION
EUROPÄISCHES KOMITEE FÜR NORMUNG

CEN-CENELEC Management Centre: Avenue Marnix 17, B-1000 Brussels

© 2015 CEN All rights of exploitation in any form and by any means reserved worldwide for CEN national Members.

Ref. No. EN 1870-17:2012+A1:2015 E

Documents
Document Sharing Hub

Full document details: BS EN 1870-17:2012+A1:2015

Contents

Page

Foreword 4

Introduction 6

1 Scope 7

2 Normative references 7

3 Terms and definitions 10
3.1 General 10
3.2 Definitions 10

4 List of significant hazards 12

5 Safety requirements and/or measures 15
5.1 General 15
5.2 Controls 15
5.2.1 Safety and reliability of control systems 15
5.2.2 Position of controls 16
5.2.3 Starting 16
5.2.4 Normal stopping 17
5.2.5 Failure of the power supply 17
5.3 Protection against mechanical hazards 17
5.3.1 Stability 17
5.3.2 Risk of break-up during operation 18
5.3.3 Tool holder and tool design 18
5.3.4 Braking 21
5.3.5 Workpiece supports and guides 22
5.3.6 Prevention of access to moving parts 24
5.3.7 Clamping devices 27
5.4 Protection against non-mechanical hazards 28
5.4.1 Fire 28
5.4.2 Noise 28
5.4.3 Emission of chips and dust 29
5.4.4 Electricity 30
5.4.5 Ergonomics and handling 31
5.4.6 Pneumatics 31
5.4.7 Electromagnetic compatibility 32
5.4.8 Laser 32
5.4.9 Static electricity 32
5.4.10 Errors of fitting 32
5.4.11 Supply disconnection (Isolation) 32
5.4.12 Maintenance 33

6 Information for use 33
6.1 General 33
6.2 Marking 33
6.3 Instruction handbook 34

Annex A (normative) **Stability test for displaceable machines** 38

Annex B (normative) **Saw spindle dimensional tolerances** 39

Annex C (normative) **Impact test method for guards** 40

Documents
Document Sharing Hub

Full document details: BS EN 1870-17:2012+A1:2015

C.1 General **40**
C.2 Test method **40**
C.2.1 Preliminary remarks **40**
C.2.2 Testing equipment **40**
C.2.3 Projectile for guards **40**
C.2.4 Sampling **40**
C.2.5 Test procedure **40**
C.3 Results **41**
C.4 Assessment **41**
C.5 Test report **41**
C.6 Test equipment for impact test **41**
Annex D (normative) **Brake tests** **43**
D.1 Conditions for all tests **43**
D.2 Tests **43**
D.2.1 Un-braked run-down time **43**
D.2.2 Braked run-down time **43**
Annex ZA (informative) **Relationship between this European Standard and the Essential Requirements of EU Directive 2006/42/EC** **44**
Bibliography **47**

Documents
Document Sharing Hub
Full document details: BS EN 1870-17:2012+A1:2015

Foreword

This document (EN 1870-17:2012+A1:2015) has been prepared by Technical Committee CEN/TC 142 “Woodworking machines - Safety”, the secretariat of which is held by UNI.

This European Standard shall be given the status of a national standard, either by publication of an identical text or by endorsement, at the latest by October 2015, and conflicting national standards shall be withdrawn at the latest by October 2015.

Attention is drawn to the possibility that some of the elements of this document may be the subject of patent rights. CEN [and/or CENELEC] shall not be held responsible for identifying any or all such patent rights.

This document supersedes ▌A1⟩ EN 1870-17:2012 ⟨A1▌.

This document includes Amendment 1 approved by CEN on 2015-03-01.

The start and finish of text introduced or altered by amendment is indicated in the text by tags ▌A1⟩ ⟨A1▌.

This document has been prepared under a mandate given to CEN by the European Commission and the European Free Trade Association, and supports essential requirements of the Machinery Directive.

For relationship with the Machinery Directive 2006/42/EC, see informative Annex ZA, which is an integral part of this document.

The main modification to the 2009 edition relates to the introduction of performance levels (PL).

Organisations contributing to the preparation of this European Standard include European Committee of Woodworking Machinery Manufacturers Association "EUMABOIS.

EN 1870, *Safety of woodworking machines — Circular sawing machines*, consists of the following parts:

— *Part 1: Circular saw benches (with and without sliding table), dimension saws and building site saws*;

— *Part 3: Down cutting cross-cut saws and dual purpose down cutting cross-cut saws/circular saw benches*;

— *Part 4: Multi-blade rip sawing machines with manual loading and/or unloading*;

— *Part 5: Circular sawbenches/up-cutting cross-cut sawing machines*;

— *Part 6: Circular sawing machines for firewood and dual purpose circular sawing machines for firewood/circular saw benches, with manual loading and/or unloading*;

— *Part 7: Single blade log sawing machines with integrated feed table and manual loading and/or unloading*;

— *Part 8: Single blade edging circular rip sawing machines with power driven saw unit and manual loading and/or unloading*;

— *Part 9: Double blade circular sawing machines for cross-cutting with integrated feed and with manual loading and/or unloading*;

— *Part 10: Single blade automatic and semi-automatic up-cutting cross-cut sawing machines*;

— *Part 11: Semi-automatic and automatic horizontal cross-cut sawing machines with one saw unit (radial arm saws)*;

AVA Documents
Document Sharing Hub
Full document details: BS EN 1870-17:2012+A1:2015

— *Part 12: Pendulum cross-cut sawing machines*;

— *Part 13: Horizontal beam panel sawing machines*;

— *Part 14: Vertical panel sawing machines*;

— *Part 15: Multi-blade cross-cut sawing machines with integrated feed of the workpiece and manual loading and/or unloading*;

— *Part 16: Double mitre sawing machines for V-cutting*;

— *Part 17: Manual horizontal cutting cross-cut sawing machines with one saw unit (radial arm saws)*;

— *Part 18: Dimension saws* (at Enquiry stage at the time of publication of the present document);

— *Part 19: Circular saw benches (with and without sliding table) and building site saws* (at Enquiry stage at the time of publication of the present document).

The European Standards produced by CEN/TC 142 are particular to woodworking machines and complement the relevant A and B standards on the subject of general safety (see Introduction of EN ISO 12100:2010 for a description of A, B and C standards).

According to the CEN-CENELEC Internal Regulations, the national standards organizations of the following countries are bound to implement this European Standard: Austria, Belgium, Bulgaria, Croatia, Cyprus, Czech Republic, Denmark, Estonia, Finland, Former Yugoslav Republic of Macedonia, France, Germany, Greece, Hungary, Iceland, Ireland, Italy, Latvia, Lithuania, Luxembourg, Malta, Netherlands, Norway, Poland, Portugal, Romania, Slovakia, Slovenia, Spain, Sweden, Switzerland, Turkey and the United Kingdom.

Documents
Document Sharing Hub
Full document details: BS EN 1870-17:2012+A1:2015

Introduction

This document has been prepared to be a harmonised standard to provide one means of conforming to the essential safety requirements of the Machinery Directive, and associated EFTA regulations. This document is a type C standard as stated in EN ISO 12100:2010.

The machinery concerned and the extent to which hazards, hazardous situations and events are covered are indicated in the scope of this document.

When provisions of this type C standard are different from those which are stated in type A or B standards, the provisions of this type C standard take precedence over the provisions of other standards, for machines that have been designed and built in accordance with the requirements of the provisions of this type C standard.

The requirements of this document are directed to manufacturers and their authorised representatives of manual horizontal cutting cross-cut circular sawing machines with one saw unit (manual radial arm saws). It is also useful for designers.

This document also includes provisions and examples of information to be provided by the manufacturer to the user.

Common requirements for tooling are given in EN 847-1:2005+A1:2007.

Documents
Document Sharing Hub
Full document details: BS EN 1870-17:2012+A1:2015

1 Scope

This European Standard specifies all significant hazards, hazardous situation and events as listed in Clause 4, relevant to stationary and displaceable manual horizontal cutting cross-cut circular sawing machines with one saw unit (manual radial arm saws), hereinafter referred to as “machines”, designed to cut solid wood, chipboard, fibreboard, plywood and also these materials if they are covered with plastic edging and/or plastic laminates, when they are used as intended and under the conditions foreseen by the manufacturer including reasonably foreseeable misuse.

NOTE 1 For the definition of stationary and displaceable machine, see 3.2.3 and 3.2.4.

The requirements of this document apply to all machines whatever their method of control e.g. electromechanical and/or electronic.

This document does not apply to:

a) machines set up on a bench or a table similar to a bench, which are intended to carry out work in a stationary position, capable of being lifted by one person by hand; the bench can also be an integrated part of the machine if it consists of hinged legs which can be extended down;

NOTE 2 Transportable motor-operated electrical tools are dealt with in EN 61029-1:2009 together with IEC 61029-2-2:1993.

b) machines fitted with hydraulically powered machine actuators;

c) machines fitted with powered work-piece positioning;

d) machines fitted with the facility for either ripping, milling (including trenching and grooving), sanding and/or drilling;

e) machines equipped with more than one saw spindle speed;

NOTE 3 A standard to cover machines that can be used for ripping and moulding will be considered at the next revision.

NOTE 4 Semi-automatic and automatic horizontal cutting cross-cut circular sawing machines with one saw unit (radial arm saws) are dealt with in EN 1870-11:2003+A1:2009.

f) machines with integrated feed.

This document is not applicable to manual horizontal cutting cross-cut circular sawing machines with one saw unit (manual radial arm saws) which are manufactured before the date of its publication as EN.

2 Normative references

The following documents, in whole or in part, are normatively referenced in this document and are indispensable for its application. For dated references, only the edition cited applies. For undated references, the latest edition of the referenced document (including any amendments) applies.

EN 614-1:2006+A1:2009, *Safety of machinery — Ergonomic design principles — Part 1: Terminology and general principles*

EN 614-2:2000+A1:2008, *Safety of machinery — Ergonomic design principles — Part 2: Interactions between the design of machinery and work tasks*

Documents
Document Sharing Hub

Full document details: BS EN 1870-17:2012+A1:2015

EN 847-1:2005+A1:2007, *Tools for woodworking — Safety requirements — Part 1: Milling tools, circular saw blades*

EN 894-1:1997+A1:2008, *Safety of machinery — Ergonomics requirements for the design of displays and control actuators — Part 1: General principles for human interactions with displays and control actuators*

EN 894-2:1997+A1:2008, *Safety of machinery — Ergonomics requirements for the design of displays and control actuators — Part 2: Displays*

EN 894-3:2000+A1:2008, *Safety of machinery — Ergonomics requirements for the design of displays and control actuators — Part 3: Control actuators*

EN 1005-1:2001+A1:2008, *Safety of machinery — Human physical performance — Part 1: Terms and definitions*

EN 1005-2:2003+A1:2008, *Safety of machinery — Human physical performance — Part 2: Manual handling of machinery and component parts of machinery*

EN 1005-3:2002+A1:2008, *Safety of machinery — Human physical performance — Part 3: Recommended force limits for machinery operation*

EN 1005-4:2005+A1:2008, *Safety of machinery — Human physical performance — Part 4: Evaluation of working postures and movements in relation to machinery*

EN 1037:1995+A1:2008, *Safety of machinery — Prevention of unexpected start-up*

EN 1088:1995+A2:2008, *Safety of machinery — Interlocking devices associated with guards — Principles for design and selection*

EN 50370-1:2005, *Electromagnetic compatibility (EMC) — Product family standard for machine tools — Part 1: Emission*

EN 50370-2:2003, *Electromagnetic compatibility (EMC) — Product family standard for machine tools — Part 2: Immunity*

EN 60204-1:2006, *Safety of machinery — Electrical equipment of machines — Part 1: General requirements (IEC 60204-1:2005, modified)*

EN 60439-1:1999,[1)] *Low-voltage switchgear and controlgear assemblies — Part 1: Type-tested and partially type-tested assemblies (IEC 60439-1:1999)*

EN 60529:1991,[2)] *Degrees of protection provided by enclosures (IP Code) (IEC 60529:1989)*

EN 60825-1:2007, *Safety of laser products — Part 1: Equipment classification and requirements (IEC 60825-1:2007)*

EN 61310-1:2008, *Safety of machinery — Indication, marking and actuation — Part 1: Requirements for visual, auditory and tactile signals (IEC 61310-1:2007)*

EN 61800-5-2:2007, *Adjustable speed electrical power drive systems — Part 5-2: Safety requirements — Functional (IEC 61800-5-2:2007)*

---

1) EN 60439-1:1999 is amended by EN 60439-1:1999/A1:2004, based on IEC 60439-1:1999/A1:2004.

2) EN 60529:1991 is amended by EN 60529:1991/A1:2000, based on IEC 60529:1989/A1:1999.

Documents
Document Sharing Hub
Full document details: BS EN 1870-17:2012+A1:2015

EN ISO 3743-1:2010, *Acoustics — Determination of sound power levels and sound energy levels of noise sources using sound pressure — Engineering methods for small moveable sources in reverberant fields — Part 1: Comparison method for a hard-walled test room (ISO 3743-1:2010)*

EN ISO 3743-2:2009, *Acoustics — Determination of sound power levels of noise sources using sound pressure — Engineering methods for small, movable sources in reverberant fields — Part 2: Methods for special reverberation test rooms (ISO 3743-2:1994)*

EN ISO 3744:2010, *Acoustics — Determination of sound power levels and sound energy levels of noise sources using sound pressure — Engineering method in an essentially free field over a reflecting plane (ISO 3744:2010)*

EN ISO 3745:2009,[3)] *Acoustics — Determination of sound power levels of noise sources using sound pressure — Precision methods for anechoic and semi-anechoic rooms (ISO 3745:2003)*

EN ISO 3746:2010, *Acoustics — Determination of sound power levels and sound energy levels of noise sources using sound pressure — Survey method using an enveloping measurement surface over a reflecting plane (ISO 3746:2010)*

EN ISO 4414:2010, *Pneumatic fluid power — General rules and safety requirements for systems and their components (ISO 4414:2010)*

EN ISO 4871:2009, *Acoustics — Declaration and verification of noise emission values of machinery and equipment (ISO 4871:1996)*

EN ISO 9614-1:2009, *Acoustics — Determination of sound power levels of noise sources using sound intensity — Part 1: Measurement at discrete points (ISO 9614-1:1993)*

EN ISO 11202:2010, *Acoustics — Noise emitted by machinery and equipment — Determination of emission sound pressure levels at a work station and at other specified positions applying approximate environmental corrections (ISO 11202:2010)*

EN ISO 11204:2010, *Acoustics — Noise emitted by machinery and equipment — Determination of emission sound pressure levels at a work station and at other specified positions applying accurate environmental corrections (ISO 11204:2010)*

EN ISO 11688-1:2009, *Acoustics — Recommended practice for the design of low-noise machinery and equipment — Part 1: Planning (ISO/TR 11688-1:1995)*

EN ISO 12100:2010, *Safety of machinery — General principles for design — Risk assessment and risk reduction (ISO 12100:2010)*

EN ISO 13849-1:2008, *Safety of machinery — Safety-related parts of controls systems — Part 1: General principles for design (ISO 13849-1:2006)*

EN ISO 13857:2008, *Safety of machinery — Safety distances to prevent hazard zones being reached by upper and lower limbs (ISO 13857:2008)*

ISO 7960:1995, *Airborne noise emitted by machine tools — Operating conditions for woodworking machines*

HD 22.4 S4:2004,[4)] *Cables of rated voltages up to and including 450/750 V and having cross-linked insulation — Part 4: Cords and flexible cables*

---

3) EN ISO 3745:2009 is superseded by EN ISO 3745:2012.

4) HD 22.4 S4:2004 is superseded by EN 50525-2-21:2011.

Documents
Document Sharing Hub

Full document details: BS EN 1870-17:2012+A1:2015

3 Terms and definitions

3.1 General

For the purposes of this document, the terms and definitions given in EN ISO 12100:2010 and the following apply.

3.2 Definitions

3.2.1
cross-cutting
operation of cutting across the longitudinal workpiece dimension

3.2.2
manual horizontal cutting cross-cut circular sawing machine with one saw unit (manual radial arm saw)
machine where the saw unit has hand feed and is moved horizontally forward along an arm in a straight line through the workpiece during the cut and then back to its initial/rest position

Note 1 to entry: See Figures 1 and 2.

Note 2 to entry: The arm can rotate around a vertical axis (pivoting) in a horizontal plane and the saw unit can rotate about a horizontal axis (canting) parallel to the arm. The workpiece is manually positioned on and removed from the workpiece support.

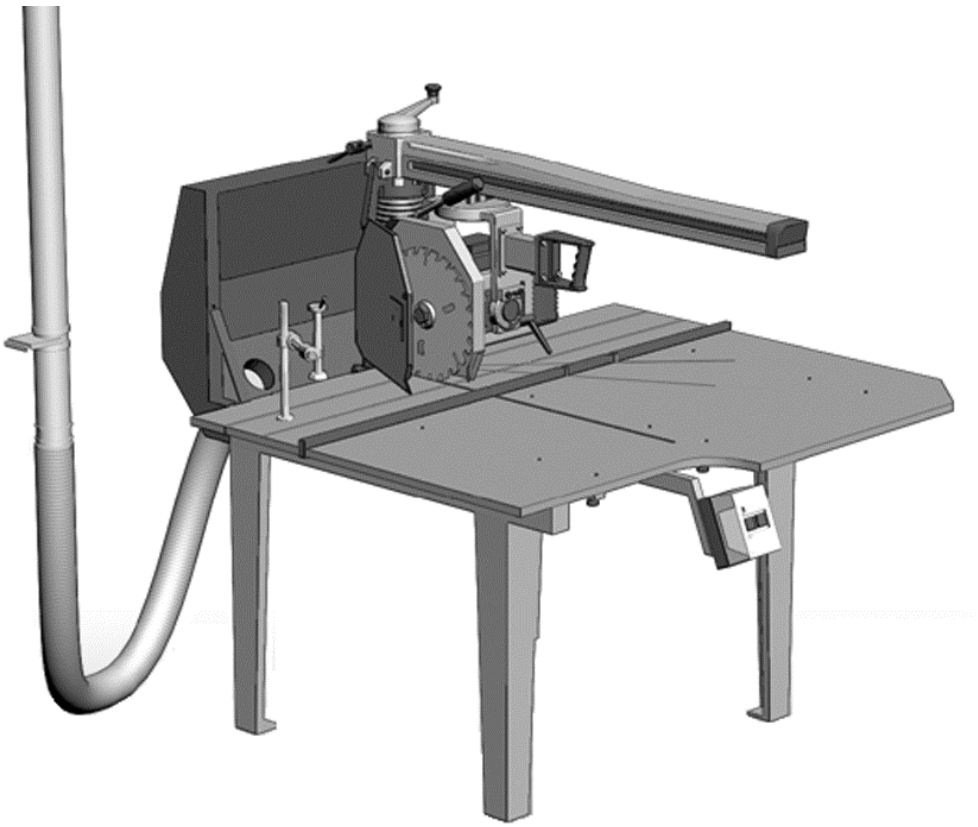

NOTE The saw blade is not in the rest position.

Figure 1 — Example 1 of a manual horizontal cutting cross-cut circular sawing machine with one saw unit (manual radial arm saw)

Documents
Document Sharing Hub
Full document details: BS EN 1870-17:2012+A1:2015

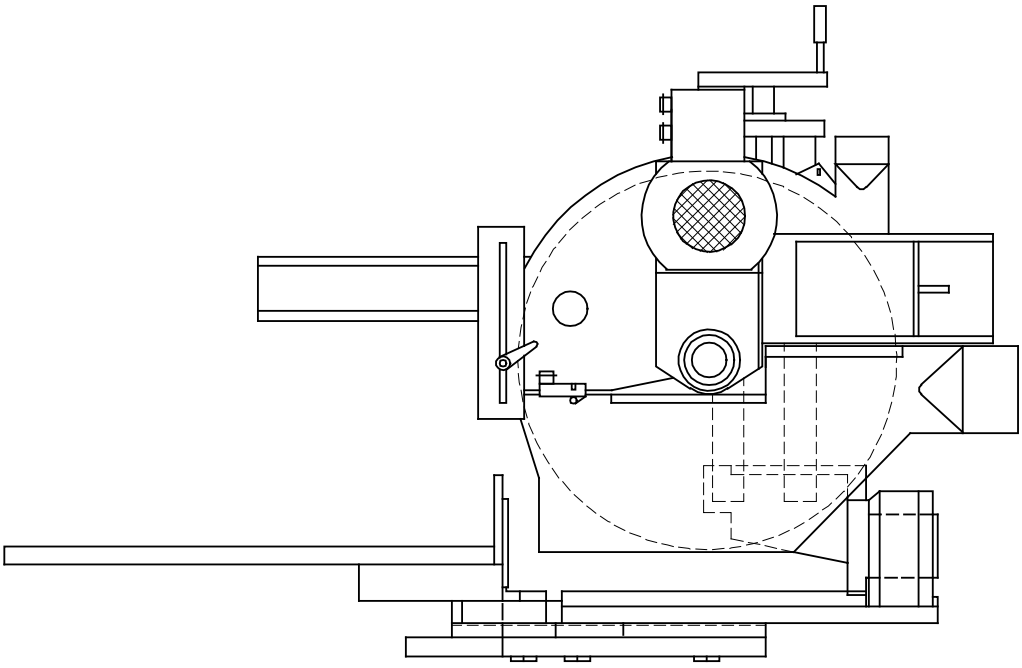

Figure 2 — Example 2 of a manual horizontal cutting cross-cut circular sawing machine with one saw unit (manual radial arm saw)

3.2.3
stationary machine
machine designed to be located on or fixed to the floor or other parts of the structure of the premises and to be stationary during use

3.2.4
displaceable machine
machine which is located on the floor, stationary during use and equipped with a device, normally wheels, which allow it to be moved between locations

3.2.5
hand feed of the saw unit
manual movement of the saw unit incorporating the saw blade along the forward arm of the machine in direction of the feed movement

3.2.6
machine actuator
power mechanism used to effect motion of the saw blade

3.2.7
cutting area of the saw blade
area of the saw blade where it can be involved in the cutting process

3.2.8
non-cutting area of the saw blade
area of the saw blade where it is not involved in the cutting process

3.2.9
cutting area of a radial arm saw
area formed by the maximum left and right pivoting and canting position at maximum stroke capacity of the saw blade with the maximum saw blade diameter the machine is designed for

AVA Documents
Document Sharing Hub

Full document details: BS EN 1870-17:2012+A1:2015

3.2.10
un-braked run-down time
time elapsed from the actuation of the stop control device up to spindle standstill with deactivated brake

3.2.11
braked run-down time
time elapsed from the actuation of the stop control device up to spindle standstill with activated brake

3.2.12
information from the supplier
statements, sales literature, leaflets or other documents where a manufacturer (supplier) declares either the characteristics or the compliance of the material or product to a relevant standard

3.2.13
performance level
PL
discrete level used to specify the ability of safety-related parts of control systems to perform a safety function under foreseeable conditions

[SOURCE: EN ISO 13849-1:2008, 3.1.23]

4 List of significant hazards

This clause contains all significant hazards, hazardous situations and events (see EN ISO 12100:2010), identified by risk assessment as significant for the machines as defined in the scope and which require action to eliminate or reduce the risk by defining safety requirements and/or measures or by reference to relevant standards.

These hazards are listed in Table 1.

Documents
Document Sharing Hub
Full document details: BS EN 1870-17:2012+A1:2015

Table 1 — List of significant hazards

No	Hazards, hazardous situations and hazardous events	EN ISO 12100:2010	Relevant clause of this document
1	**Mechanical hazards** related to: - machine parts or workpieces:		
	a) shape;	6.2.2.1, 6.2.2.2, 6.3	5.3.3, 5.3.5, 5.3.7, 5.4.5
	b) relative location;		5.2.2, 5.3.3, 5.3.5, 5.3.6, 5.3.7, 5.4.3, 5.4.5
	d) mass and velocity (kinetic energy of elements in controlled or uncontrolled motion);		5.3.3, 5.3.7
	e) mechanical strength.		5.3.2, 5.3.3
	- accumulation of energy inside the machinery:		
	f) elastic elements (springs);	6.2.10, 6.3.5.4	5.3.3.5
	g) gases under pressure;		5.2.5, 5.3.7, 5.4.12
1.1	Crushing hazard		5.3.6
1.2	Shearing hazard		5.3.6
1.3	Cutting or severing hazard		5.3.3.5, 5.3.3.6, 5.3.6
1.4	Entanglement hazard		5.3.6
1.5	Drawing-in or trapping hazard		5.3.6
1.6	Impact hazard		5.3.7
1.7	Stabbing or puncture hazard		5.3.6.1
1.8	Friction or abrasion hazard		5.3.6.1
1.9	High pressure fluid injection or ejection hazard	6.2.10	5.4.6
2	**Electrical hazards** due to:		
2.1	Contact of persons with live parts (direct contact)	6.2.9, 6.3.5.4	5.4.4
2.2	Contact of persons with parts which have become live under faulty conditions (indirect contact)	6.2.9	5.4.4
2.4	Electrostatic phenomena	6.2.9	5.4.9

AVA Documents
Document Sharing Hub

Full document details: BS EN 1870-17:2012+A1:2015

No	Hazards, hazardous situations and hazardous events	EN ISO 12100:2010	Relevant clause of this document
4	**Hazards generated by noise**, resulting in:		
4.1	Hearing loss (deafness), other physiological disorders (loss of balance, loss of awareness)	6.2.2.2, 6.3	5.4.2
4.2	Interference with speech communication, acoustic signals.		5.4.2
6	**Hazards generated by radiation**		
6.5	Lasers	6.3.4.5	5.4.8
7	**Hazards generated by materials and substances** (and their constituent elements) processed or used by the machinery		
7.1	Hazards from contact with or inhalation of harmful fluids and dusts	6.2.3, 6.2.4	5.4.3
7.2	Fire hazard	6.2.4	5.4.1
8	**Hazards generated by neglecting ergonomic principles in machinery design**		
8.1	Unhealthy postures or excessive effort	6.2.7, 6.2.8, 6.2.11.12, 6.3.5.5, 6.3.5.6	5.2.2, 5.4.5
8.2	Hand-arm or foot-leg anatomy	6.2.8.3	5.4.5
8.6	Human error, human behaviour	6.2.8, 6.2.11.8, 6.2.11.10, 6.3.5.2, 6.4	5.2.1, 5.2.3, 5.4.10
8.7	Design, location or identification of manual controls	4.8.7, 4.11.8	5.2.2, 5.4.11
8.8	Design or location of visual display units	6.2.8.8, 6.4.2	5.3.3.5, 5.4.5
10	**Unexpected start-up, unexpected overrun/overspeed** (or any similar malfunction) from:		
10.1	Failure/disorder of the control system	6.2.11, 6.3.5.4	5.2.1
10.2	Uncontrolled restoration of energy supply after an interruption	6.2.11.4	5.2.5
10.3	External influences on electrical equipment	6.2.11.11	5.4.7
10.6	Errors made by the operator (due to mismatch of machinery with human characteristics and abilities, see 8.6)	6.2.8, 6.2.11.8, 6.2.11.10, 6.3.5.2, 6.4	5.4.10, 6.3
11	**Impossibility of stopping the machine in the best possible conditions**	6.2.11.1, 6.2.11.3, 6.3.5.2	5.2.4, 5.3.4
13	**Failure of the power supply**	6.2.11.1, 6.2.11.4	5.2.5
14	**Failure of the control circuit**	6.2.11, 6.3.5.4	5.2.1

Documents
Document Sharing Hub
Full document details: BS EN 1870-17:2012+A1:2015