BS EN 196-1:2016

BSI Standards Publication

Methods of testing cement

Part 1: Determination of strength

Documents
Document Sharing Hub

National foreword

This British Standard is the UK implementation of EN 196-1:2016. It supersedes BS EN 196-1:2005 which is withdrawn.

The UK participation in its preparation was entrusted to Technical Committee B/516/12, Sampling and testing.

A list of organizations represented on this committee can be obtained on request to its secretary.

This publication does not purport to include all the necessary provisions of a contract. Users are responsible for its correct application.

© The British Standards Institution 2016. Published by BSI Standards Limited 2016

ISBN 978 0 580 84580 2

ICS 91.100.10

Compliance with a British Standard cannot confer immunity from legal obligations.

This British Standard was published under the authority of the Standards Policy and Strategy Committee on 31 May 2016.

Amendments issued since publication

Date	Text affected

Documents
Document Sharing Hub

Full document details: BS EN 196-1:2016

EUROPEAN STANDARD
NORME EUROPÉENNE
EUROPÄISCHE NORM

EN 196-1

April 2016

ICS 91.100.10

Supersedes EN 196-1:2005

English Version

Methods of testing cement - Part 1: Determination of strength

Méthodes d'essais des ciments - Partie 1: Détermination des résistances

Prüfverfahren für Zement - Teil 1: Bestimmung der Festigkeit

This European Standard was approved by CEN on 20 December 2015.

CEN members are bound to comply with the CEN/CENELEC Internal Regulations which stipulate the conditions for giving this European Standard the status of a national standard without any alteration. Up-to-date lists and bibliographical references concerning such national standards may be obtained on application to the CEN-CENELEC Management Centre or to any CEN member.

This European Standard exists in three official versions (English, French, German). A version in any other language made by translation under the responsibility of a CEN member into its own language and notified to the CEN-CENELEC Management Centre has the same status as the official versions.

CEN members are the national standards bodies of Austria, Belgium, Bulgaria, Croatia, Cyprus, Czech Republic, Denmark, Estonia, Finland, Former Yugoslav Republic of Macedonia, France, Germany, Greece, Hungary, Iceland, Ireland, Italy, Latvia, Lithuania, Luxembourg, Malta, Netherlands, Norway, Poland, Portugal, Romania, Slovakia, Slovenia, Spain, Sweden, Switzerland, Turkey and United Kingdom.

EUROPEAN COMMITTEE FOR STANDARDIZATION
COMITÉ EUROPÉEN DE NORMALISATION
EUROPÄISCHES KOMITEE FÜR NORMUNG

CEN-CENELEC Management Centre: Avenue Marnix 17, B-1000 Brussels

© 2016 CEN All rights of exploitation in any form and by any means reserved worldwide for CEN national Members.

Ref. No. EN 196-1:2016 E

Documents
Document Sharing Hub

Full document details: BS EN 196-1:2016

Contents

Page

European foreword ... 4

1 Scope ... 5

2 Normative references ... 5

3 Principle ... 5

4 Laboratory and equipment ... 6
4.1 Laboratory ... 6
4.2 General requirements for the equipment ... 6
4.3 Test sieves ... 7
4.4 Mixer ... 7
4.5 Moulds ... 8
4.6 Jolting apparatus ... 11
4.7 Flexural strength testing apparatus ... 13
4.8 Compressive strength testing machine ... 14
4.9 Jig for compressive strength testing machine ... 15
4.10 Balance ... 15
4.11 Timer ... 15

5 Mortar constituents ... 16
5.1 Sand ... 16
5.2 Cement ... 17
5.3 Water ... 17

6 Preparation of mortar ... 18
6.1 Composition of mortar ... 18
6.2 Mixing of mortar ... 18

7 Preparation of test specimens ... 18
7.1 Size of specimens ... 18
7.2 Moulding of test specimens ... 18

8 Conditioning of test specimens ... 19
8.1 Handling and storage before demoulding ... 19
8.2 Demoulding of specimens ... 19
8.3 Curing of specimens in water ... 19
8.4 Age of specimens for strength tests ... 20

9 Testing procedures ... 20
9.1 Flexural strength ... 20
9.2 Compressive strength ... 20

10 Results ... 21
10.1 Flexural strength ... 21
10.2 Compressive strength ... 21

11 Validation testing of CEN Standard sand and of alternative compaction equipment ... 23
11.1 General ... 23
11.2 Validation testing of CEN Standard sand ... 23
11.3 Validation testing of alternative compaction equipment ... 26

Documents
Document Sharing Hub

Full document details: BS EN 196-1:2016

Annex A (normative) Alternative vibration compaction equipment and procedures validated as equivalent to the reference jolting compaction equipment and procedure **29**

A.1 General **29**

A.2 Vibrating table, A **29**

A.3 Vibrating table, B **32**

Documents
Document Sharing Hub
Full document details: BS EN 196-1:2016

European foreword

This document (EN 196-1:2016) has been prepared by Technical Committee CEN/TC 51 "Cement and building limes", the secretariat of which is held by NBN.

This European Standard shall be given the status of a national standard, either by publication of an identical text or by endorsement, at the latest by October 2016, and conflicting national standards shall be withdrawn at the latest by October 2016.

Attention is drawn to the possibility that some of the elements of this document may be the subject of patent rights. CEN shall not be held responsible for identifying any or all such patent rights.

This document supersedes EN 196-1:2005.

In comparison to EN 196-1:2005, the following changes have been made:

— In Clause 2, the normative references have been updated.

— In 10.2.3 estimates of the precisions for compressive strength testing have been revised with an indication of repeatability and reproducibility at 2 d and 7 d.

— In 6.2 the mixing procedure has been revised with an indication of a maximum timing for the addition in the bowl.

— The standard has been editorially revised.

EN 196 consists of the following parts, under the general title *Methods of testing cement:*

— *Part 1: Determination of strength;*

— *Part 2: Chemical analysis of cement;*

— *Part 3: Determination of setting times and soundness;*

— *Part 4: Quantitative determination of constituents* (CEN/TR 196-4);

— *Part 5: Pozzolanicity test for pozzolanic cement;*

— *Part 6: Determination of fineness;*

— *Part 7: Methods of taking and preparing samples of cement;*

— *Part 8: Heat of hydration - Solution method;*

— *Part 9: Heat of hydration - Semi-adiabatic method;*

— *Part 10: Determination of the water-soluble chromium (VI) content of cement.*

According to the CEN-CENELEC Internal Regulations, the national standards organizations of the following countries are bound to implement this European Standard: Austria, Belgium, Bulgaria, Croatia, Cyprus, Czech Republic, Denmark, Estonia, Finland, Former Yugoslav Republic of Macedonia, France, Germany, Greece, Hungary, Iceland, Ireland, Italy, Latvia, Lithuania, Luxembourg, Malta, Netherlands, Norway, Poland, Portugal, Romania, Slovakia, Slovenia, Spain, Sweden, Switzerland, Turkey and the United Kingdom.

Documents
Document Sharing Hub
Full document details: BS EN 196-1:2016

1 Scope

This part of EN 196 describes the method for the determination of the compressive and, optionally, the flexural strength of cement mortar. The method applies to common cements and to other cements and materials, the standards for which call up this method. It may not apply to other cement types that have, for example, a very short initial setting time.

The method is used for assessing whether the compressive strength of cement is in conformity with its specification and for validation testing of a CEN Standard sand, EN 196-1, or alternative compaction equipment.

This part of EN 196 describes the reference equipment and procedure and allows alternative compaction equipment and procedures to be used provided that they have been validated in accordance with the appropriate provisions in this document. In the event of a dispute, only the reference equipment and procedure are used.

2 Normative references

The following documents, in whole or in part, are normatively referenced in this document and are indispensable for its application. For dated references, only the edition cited applies. For undated references, the latest edition of the referenced document (including any amendments) applies.

EN 196-7, *Methods of testing cement - Part 7: Methods of taking and preparing samples of cement*

EN 197-1, *Cement - Part 1: Composition, specifications and conformity criteria for common cements*

EN ISO 1101, *Geometrical product specifications (GPS) - Geometrical tolerancing - Tolerances of form, orientation, location and run-out (ISO 1101)*

EN ISO 1302, *Geometrical Product Specifications (GPS) - Indication of surface texture in technical product documentation (ISO 1302)*

EN ISO 7500-1, *Metallic materials - Verification of static uniaxial testing machines - Part 1: Tension/compression testing machines - Verification and calibration of the force-measuring system (ISO 7500-1)*

ISO 565, *Test sieves — Metal wire cloth, perforated metal plate and electroformed sheet — Nominal sizes of openings*

ISO 3310-1, *Test sieves - Technical requirements and testing - Part 1: Test sieves of metal wire cloth*

ISO 4200, *Plain end steel tubes, welded and seamless — General tables of dimensions and masses per unit length*

3 Principle

The method comprises the determination of the compressive, and optionally the flexural, strength of prismatic test specimens 40 mm × 40 mm × 160 mm in size.

These specimens are cast from a batch of plastic mortar containing one part by mass of cement, three parts by mass of CEN Standard sand and one half part of water (water/cement ratio 0,50). CEN Standard sands from various sources and countries may be used provided that they have been shown to give cement strength results which do not differ significantly from those obtained using the CEN Reference sand (see Clause 11).

Documents
Document Sharing Hub
Full document details: BS EN 196-1:2016

In the reference procedure the mortar is prepared by mechanical mixing and is compacted in a mould using a jolting apparatus. Alternative compaction equipment and procedures may be used provided that they have been shown to give cement strength results which do not differ significantly from those obtained using the reference jolting apparatus and procedure (see Clause 11 and Annex A).

The specimens are stored in the mould in a moist atmosphere for 24 h and, after demoulding, specimens are stored under water until strength testing.

At the required age, the specimens are taken from their wet storage, broken in flexure, determining the flexural strength where required, or broken using other suitable means which do not subject the prism halves to harmful stresses, and each half tested for strength in compression.

4 Laboratory and equipment

4.1 Laboratory

The laboratory where preparation of specimens takes place shall be maintained at a temperature of (20 ± 2) °C and a relative humidity of not less than 50 %.

The moist air room or the large cabinet for storage of the specimens in the mould shall be maintained at a temperature of (20,0 ± 1,0) °C and a relative humidity of not less than 90 %.

The storage containers for curing the specimens in water, and the grates with which they are fitted, shall be of material which does not react with cement. The temperature of the water shall be maintained at (20,0 ± 1,0) °C.

The temperature and relative humidity of the air in the laboratory and the temperature of the water in the storage containers shall be recorded at least once a day during working hours. The temperature and relative humidity of the moist air room or cabinet shall be recorded at least every 4 h.

Cement, CEN Standard sand (see 5.1.3), water and apparatus used to make and test specimens shall be at a temperature of (20 ± 2) °C.

Where temperature ranges are given, the target temperature at which the controls are set shall be the middle value of the range.

4.2 General requirements for the equipment

The tolerances shown in Figures 1 to 5 are important for correct operation of the equipment in the testing procedure. When regular control measurements show that the tolerances are not met, the equipment shall be rejected, adjusted or repaired. Records of control measurements shall be kept.

Acceptance measurements on new equipment shall cover mass, volume, and dimensions to the extent that these are indicated in this document paying particular attention to those critical dimensions for which tolerances are specified.

In those cases where the material of the equipment can influence the results, the material is specified and shall be used.

The approximate dimensions shown in the figures are provided as guidance to equipment manufacturers or operators. Dimensions, which include tolerances, are obligatory.

Documents
Document Sharing Hub
Full document details: BS EN 196-1:2016

4.3 Test sieves

Wire cloth test sieves conforming to ISO 3310-1 shall be of the sizes from ISO 565 given in Table 1 (series R 20).

Table 1 — Aperture of test sieves

Square mesh size (mm)					
2,00	1,60	1,00	0,50	0,16	0,08

4.4 Mixer

The mixer shall consist essentially of:

a) a stainless steel bowl with a capacity of about 5 l of the typical shape and size shown in Figure 1, provided with means by which it can be fixed securely to the mixer frame during mixing and by which the height of the bowl in relation to the blade and, to some extent, the gap between blade and bowl can be finely adjusted and fixed;

b) a stainless steel blade of the typical shape, size and tolerances shown in Figure 1, revolving about its own axis as it is driven in a planetary movement around the axis of the bowl at controlled speeds by an electric motor. The two directions of rotation shall be opposite and the ratio between the two speeds shall not be a whole number.

Blades and bowls shall form sets which shall always be used together.

The gap of (3 ± 1) mm refers to the situation when the blade in the empty bowl shown in Figure 1 is brought as close as possible to the wall. This gap shall be checked regularly applying minimal pressure to the blade and assuring that there is no perceptible clearance between the joint of the blade and the axis of the motor.

NOTE 1 Simple tolerance gauges (feeler gauges) are useful where direct measurement is difficult.

NOTE 2 The dimensions marked as approximate on Figure 1 are for the guidance of manufacturers.

The mixer shall operate at the speeds given in Table 2 when mixing the mortar.

Table 2 — Speeds of mixer blade

	Rotation min $^{-1}$	**Planetary movement** min $^{-1}$
Low speed	140 ± 5	62 ± 5
High speed	285 ± 10	125 ± 10

Documents
Document Sharing Hub
Full document details: BS EN 196-1:2016

Dimensions in millimetres

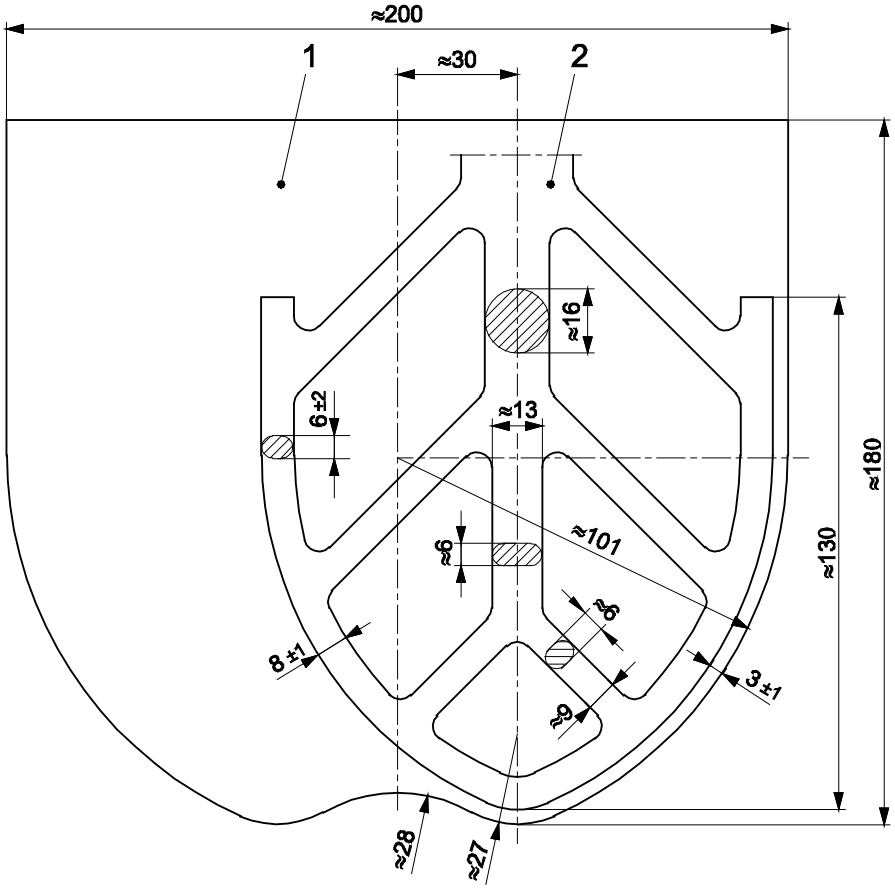

Key

1 bowl

2 blade

Figure 1 — Typical bowl and blade

4.5 Moulds

The mould shall consist of three horizontal compartments so that three prismatic specimens 40 mm × 40 mm in cross section and 160 mm in length can be prepared simultaneously.

A typical design is shown in Figure 2.

The mould shall be made of steel with walls approximately 10 mm thick. Each internal side face of the mould shall be case hardened to a Vickers hardness of at least HV 200, as supplied.

A minimum Vickers hardness value of HV 400 is recommended.

The mould shall be constructed in such a manner as to facilitate the removal of moulded specimens without damage. Each mould shall be provided with a machined steel or cast iron baseplate. The mould, when assembled, shall be positively and rigidly held together and fixed to the baseplate.

The assembly shall be such that there is no distortion or visible leakage during operation. The baseplate shall make adequate contact with the table of the compacting apparatus and be rigid enough not to induce secondary vibrations.

NOTE 1 Moulds and jolting apparatus from different manufacturers may have unrelated external dimensions and masses, so their compatibility needs to be ensured by the purchaser.

Documents
Document Sharing Hub
Full document details: BS EN 196-1:2016

Each part of the mould shall be stamped with identifying marks to facilitate assembly and to ensure conformity to the specified tolerances. Similar parts of separate mould assemblies shall not be interchanged.

The assembled mould shall conform to the following requirements.

a) The internal dimensions and tolerances of each mould compartment shall be as follows:

   1) length: (160 ± 1) mm;

   2) width: (40,0 ± 0,2) mm;

   3) depth: (40,1 ± 0,1) mm.

b) The flatness tolerance (see EN ISO 1101) over the whole of each internal side face shall be not greater than 0,03 mm.

c) The perpendicularity tolerance (see EN ISO 1101) for each internal face with respect to the bottom surface of the mould and the adjacent internal face as datum faces shall be not greater than 0,2 mm.

d) The surface texture (see EN ISO 1302) of each internal side face shall be not rougher than N8, as supplied.

Moulds shall be replaced when any one of the specified tolerances is exceeded. The mass of the mould shall accord with the requirement for the combined mass in 4.6.

In preparing the cleaned mould ready for use, a suitable sealing material shall be used to coat the outer joints of the mould. A thin film of mould oil shall be applied to the internal faces of the mould.

NOTE 2 Some oils have been found to affect the setting of cement; mineral-based oils have been found to be suitable.

To facilitate the filling of the mould a tightly fitting metal hopper with vertical walls 20 mm to 40 mm in height shall be provided. When viewed in plan, the hopper walls shall overlap the internal walls of the mould by not more than 1 mm. The outer walls of the hopper shall be provided with a means of location to ensure correct positioning over the mould.

For spreading and striking off the mortar two spreaders and a metal straightedge of the type shown in Figure 3 shall be provided.

AVA Documents
Document Sharing Hub

Full document details: BS EN 196-1:2016

Dimensions in millimetres

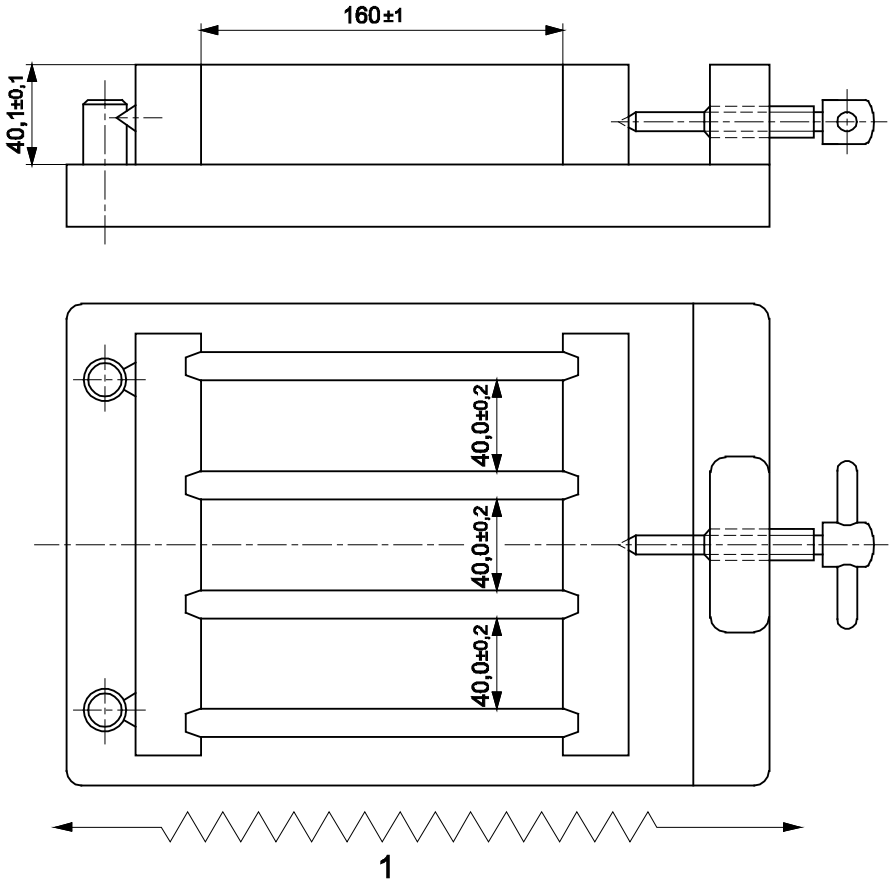

Key

1 striking off direction with sawing motion

Figure 2 — Typical mould

Documents
Document Sharing Hub
Full document details: BS EN 196-1:2016