BS EN 196-10:2016

BSI Standards Publication

Methods of testing cement

Part 10: Determination of the water-soluble chromium (VI) content of cement

Documents
Document Sharing Hub

Full document details: BS EN 196-10:2016

National foreword

This British Standard is the UK implementation of EN 196-10:2016. It supersedes BS EN 196-10:2006 which is withdrawn.

The UK participation in its preparation was entrusted to Technical Committee B/516/12, Sampling and testing.

A list of organizations represented on this committee can be obtained on request to its secretary.

This publication does not purport to include all the necessary provisions of a contract. Users are responsible for its correct application.

© The British Standards Institution 2016.
Published by BSI Standards Limited 2016

ISBN 978 0 580 84581 9

ICS 91.100.10

Compliance with a British Standard cannot confer immunity from legal obligations.

This British Standard was published under the authority of the Standards Policy and Strategy Committee on 31 May 2016.

Amendments/corrigenda issued since publication

Date	Text affected

Documents
Document Sharing Hub

Full document details: BS EN 196-10:2016

EUROPEAN STANDARD

NORME EUROPÉENNE

EUROPÄISCHE NORM

EN 196-10

May 2016

ICS 91.100.10

Supersedes EN 196-10:2006

English Version

Methods of testing cement - Part 10: Determination of the water-soluble chromium (VI) content of cement

Méthodes d'essais des ciments - Partie 10 : Détermination de la teneur en chrome (VI) soluble dans l'eau des ciments

Prüfverfahren für Zement - Teil 10: Bestimmung des Gehaltes an wasserlöslichem Chrom (VI) in Zement

This European Standard was approved by CEN on 20 December 2015.

CEN members are bound to comply with the CEN/CENELEC Internal Regulations which stipulate the conditions for giving this European Standard the status of a national standard without any alteration. Up-to-date lists and bibliographical references concerning such national standards may be obtained on application to the CEN-CENELEC Management Centre or to any CEN member.

This European Standard exists in three official versions (English, French, German). A version in any other language made by translation under the responsibility of a CEN member into its own language and notified to the CEN-CENELEC Management Centre has the same status as the official versions.

CEN members are the national standards bodies of Austria, Belgium, Bulgaria, Croatia, Cyprus, Czech Republic, Denmark, Estonia, Finland, Former Yugoslav Republic of Macedonia, France, Germany, Greece, Hungary, Iceland, Ireland, Italy, Latvia, Lithuania, Luxembourg, Malta, Netherlands, Norway, Poland, Portugal, Romania, Slovakia, Slovenia, Spain, Sweden, Switzerland, Turkey and United Kingdom.

EUROPEAN COMMITTEE FOR STANDARDIZATION
COMITÉ EUROPÉEN DE NORMALISATION
EUROPÄISCHES KOMITEE FÜR NORMUNG

CEN-CENELEC Management Centre: Avenue Marnix 17, B-1000 Brussels

© 2016 CEN All rights of exploitation in any form and by any means reserved worldwide for CEN national Members.

Ref. No. EN 196-10:2016 E

Documents
Document Sharing Hub

Full document details: BS EN 196-10:2016

Contents

Page

European foreword ... 3

Introduction ... 4

1 Scope ... 5

2 Normative references ... 5

3 General requirements for testing ... 6
3.1 Number of tests ... 6
3.2 Repeatability and reproducibility ... 6
3.3 Expression of masses, volumes, factors and results ... 6
3.4 Blank determinations ... 6

4 Reagents ... 6

5 Apparatus ... 7

6 Preparation of a test sample of cement ... 8

7 Extraction procedure ... 9
7.1 Principle ... 9
7.2 Preparation of mortar ... 9
7.3 Filtration ... 10

8 Determination of chromium (VI) ... 10
8.1 General ... 10
8.2 Measurement of absorbance without oxidation ... 10
8.3 Measurement of absorbance with oxidation ... 11

9 Calculation and expression of results ... 12
9.1 Calculation ... 12
9.2 Expression of results ... 13

10 Reporting of results ... 13

11 Repeatability and reproducibility ... 13

Annex A (normative) Evaluation of the compliance of cement with the regulatory limit in 47 to Annex XVII of Regulation (EC) No. 1907/2006 on water-soluble hexavalent chromium content ... 14

Annex B (informative) Guidance on the application of this European Standard to the determination of the water soluble chromium (VI) content of cement-containing preparations ... 24

Annex C (informative) Guidance on screening test method (1) using paste extraction - method based on DS 1020 ... 26

Annex D (informative) Guidance on screening test method (2) using paste extraction – method based on TRGS 613 ... 29

Annex E (informative) Guidance on the photometric determination of chromium reduction capacity in cements ... 33

Bibliography ... 37

Documents
Document Sharing Hub

Full document details: BS EN 196-10:2016

European foreword

This document (EN 196-10:2016) has been prepared by Technical Committee CEN/TC 51 "Cement and building limes", the secretariat of which is held by NBN.

This European Standard shall be given the status of a national standard, either by publication of an identical text or by endorsement, at the latest by November 2016, and conflicting national standards shall be withdrawn at the latest by November 2016.

Attention is drawn to the possibility that some of the elements of this document may be the subject of patent rights. CEN shall not be held responsible for identifying any or all such patent rights.

This document supersedes EN 196-10:2006.

In comparison to EN 196-10:2006, the following changes have been made:

— In Clause 2, the normative references have been updated;

— The standard has been editorially revised.

EN 196 consists of the following parts, under the general title *Methods of testing cement:*

— *Part 1: Determination of strength;*

— *Part 2: Chemical analysis of cement;*

— *Part 3: Determination of setting times and soundness;*

— *Part 4: Quantitative determination of constituents* (CEN/TR 196-4);

— *Part 5: Pozzolanicity test for pozzolanic cement;*

— *Part 6: Determination of fineness;*

— *Part 7: Methods of taking and preparing samples of cement;*

— *Part 8: Heat of hydration - Solution method;*

— *Part 9: Heat of hydration - Semi-adiabatic method;*

— *Part 10: Determination of the water-soluble chromium (VI) content of cement.*

According to the CEN-CENELEC Internal Regulations, the national standards organizations of the following countries are bound to implement this European Standard: Austria, Belgium, Bulgaria, Croatia, Cyprus, Czech Republic, Denmark, Estonia, Finland, Former Yugoslav Republic of Macedonia, France, Germany, Greece, Hungary, Iceland, Ireland, Italy, Latvia, Lithuania, Luxembourg, Malta, Netherlands, Norway, Poland, Portugal, Romania, Slovakia, Slovenia, Spain, Sweden, Switzerland, Turkey and the United Kingdom.

Documents
Document Sharing Hub
Full document details: BS EN 196-10:2016

Introduction

This European Standard specifies the reference method for the determination of water-soluble chromium (VI) content of cement that consists of two stages, an extraction procedure and an analysis of the filtered extract.

This European Standard test method has adopted the principle that extraction is carried out under conditions approximating as closely as possible to those during the commercial use of cement. Consequently extraction is by standard mortar and subsequent filtration. Other extraction procedures based on paste extraction have traditionally been used and are included in Annexes C and D for use as screening tests, in factory production control or laboratories not having access to equipment specified in EN 196-1 for the production of mortar. The use of paste extraction is outside the normal conditions of use of cement.

This European Standard test method has adopted the principle of analysis by spectrophotometry. The procedures set down generally permit the analysis to be carried out without the need for an oxidation step. On rare occasions some cements may contain reducing species, not controlled by the routine method, that interfere with the analysis and require an oxidation step. Inter-laboratory testing has demonstrated that it is necessary to include an 'initial assessment test' in order to observe the effects on the analysis. By comparing the results obtained from the method with and without the oxidation step, it can be determined whether, for that cement, the reference method should include the oxidation step.

Other instrumental procedures may be used for the analysis of the filtered extract provided they are calibrated against the analysis of the filtered extract using the reference procedure.

In case of dispute or failure to comply with a regulatory limit only the reference method shall be used.

This European Standard test method has drawn heavily on the Danish Standard DS 1020 and the extraction procedure developed by the French cement industry association ATILH. Careful consideration has been given to the details of the German TRGS 613 method developed by Germany's Hazardous Materials Committee in support of Industrial Regulations for Hazardous Materials. Notice was also taken of the British Cement Association 'inherent colour' method; the draft method produced by CEN/TC 193/WG1, reference N680, for cement-based adhesives; European Standard method EN 420 for protective gloves; and to the method, reference ID-215, developed by the Occupational Safety and Health Administration, Salt Lake City, UT, USA.

The USA Portland Cement Association, Research and Development report Serial No. 2554 "Review and evaluation of analytical methods for the determination of hexavalent chromium in hydraulic cements and clinker" by Waldemar A. Klemm was found to be most helpful in resolving technical issues. CEN/TR 14589 confirmed that chromium species and solubilities are sensitive to pH and redox conditions and care has been taken to address these in this European Standard by controlling sample exposure to air, by adding the indicator to the alkaline filtered extract and by precisely specifying the pH for the analytical procedure.

This European Standard test method was developed in order to provide a reference test method for use in the evaluation of compliance of cement with the requirements in entry 47 to Annex XVII of Regulation (EC) 1907/2006[1] of the European Parliament and of the Council of 18 December 2006 concerning the Registration, Evaluation, Authorisation and Restriction of Chemicals (REACH). A system for the evaluation of compliance of cement is set out in Annex A.

[1] Note that Regulation (EC) No 1907/2006 is impacted by Commission Regulation (EU) No 126/2013 of 13 February 2013 amending Annex XVII to Regulation (EC) No 1907/2006 of the European Parliament and of the Council on the Registration, Evaluation, Authorisation and Restriction of Chemicals (REACH).

Documents
Document Sharing Hub
Full document details: BS EN 196-10:2016

1 Scope

This part of EN 196 specifies the method for the determination of the water-soluble chromium (VI) content of cement.

A reference method is described consisting of two stages, an extraction procedure and an analysis of the filtered extract. Guidance on other extraction procedures, suitable for screening tests, for factory production control or other purposes, is given but in case of dispute or failure to comply with a regulatory limit only the reference method is used. The reference method has alternatives whereby the filtered extract may be subjected to an oxidation step or not. The criteria by which the appropriate procedure is selected are set down. Other instrumental procedures may be used for the analysis of the filtered extract provided they are calibrated against the analysis of the filtered extract using the reference procedure. In the case of a dispute, only the reference method is used.

Annex A sets out a normative procedure to be followed in case this test method is used as the basis for evaluation of conformity of a cement with the regulatory limit in Regulation (EC) 1907/2006[2].

This part of EN 196 describes a method that applies to cements. It may have wider applicability but this would need to be verified by testing on a product-by-product basis. Guidance in the possible application of this European Standard to the determination of the water-soluble chromium (VI) content of cement-containing preparations is given in Annex B.

Annexes C and D provide information on other test procedures based on paste extraction and thus depart from the performance of cement in its normal conditions of use. They may be carried out with or without the oxidation process. Users should be aware that results using these methods might be significantly different to those obtained by the reference method. In the case of dispute or failure to comply with the regulatory limit only the reference method is used.

Annex E provides guidance on a method for determination of the excess reducing agent content of cement as used in the factory internal control system of some countries. Manufacturers using such an internal control method should ensure themselves of the relevance of results in comparison with testing by the reference method.

2 Normative references

The following documents, in whole or in part, are normatively referenced in this document and are indispensable for its application. For dated references, only the edition cited applies. For undated references, the latest edition of the referenced document (including any amendments) applies.

EN 196-1, *Methods of testing cement - Part 1: Determination of strength*

EN 196-7, *Methods of testing cement - Part 7: Methods of taking and preparing samples of cement*

EN ISO/IEC 17020, *Conformity assessment - Requirements for the operation of various types of bodies performing inspection (ISO/IEC 17020)*

EN ISO/IEC 17025, *General requirements for the competence of testing and calibration laboratories (ISO/IEC 17025)*

EN ISO/IEC 17065, *Conformity assessment - Requirements for bodies certifying products, processes and services (ISO/IEC 17065)*

[2] Note that Regulation (EC) No 1907/2006 is impacted by Commission Regulation (EU) No 126/2013 of 13 February 2013 amending Annex XVII to Regulation (EC) No 1907/2006 of the European Parliament and of the Council on the Registration, Evaluation, Authorisation and Restriction of Chemicals (REACH).

Documents
Document Sharing Hub
Full document details: BS EN 196-10:2016

3 General requirements for testing

3.1 Number of tests

Determination of water-soluble chromium (VI) content of cement, where the determination is not part of a series subject to statistical control, shall be carried out in duplicate.

Where the determination is one of a series subject to statistical control, a single test shall be the minimum required.

In the case of a dispute, the number of tests shall be two (see also 3.3).

3.2 Repeatability and reproducibility

Repeatability - precision under repeatability conditions where independent test results are obtained with the same method on identical test items (material) in the same laboratory by the same operator using the same equipment within short intervals of time.

Reproducibility - precision under reproducibility conditions where test results are obtained with the same method on identical test items (material) in different laboratories with different operators using different equipment.

Repeatability and reproducibility in this European Standard are expressed as repeatability standard deviation and reproducibility standard deviation in percent by mass.

3.3 Expression of masses, volumes, factors and results

Express masses in the extraction stage in grams to the nearest 0,1 g. Express masses in the analytical stage in grams to the nearest 0,000 1 g and volumes from burettes in millilitres to the nearest 0,05 ml unless otherwise specified.

Express the calculated results, where a single test result has been obtained, as a percentage of the cement as received.

Express the calculated results, where two test results have been obtained, as the mean of the results, as a percentage of the cement as received.

If the two test results differ by more than twice the standard deviation of repeatability, repeat the test and take the mean of the two closest test results.

Express the reported water-soluble chromium (VI) content as a percentage of the cement as received, to four decimal places.

Where the results of determinations with and without oxidation are to be compared results shall be considered equivalent if they do not differ by more than twice the standard deviation of repeatability.

The results of all individual tests shall be recorded.

3.4 Blank determinations

Carry out a blank determination without a sample following the same procedure and using the same amounts of reagents. Correct the results obtained for the analytical determination accordingly.

4 Reagents

Use only reagents of analytical quality. References to water mean distilled or deionized water with electrical conductivity ≤ 0,5 mS/m.

Unless otherwise stated percent means percent by mass.

Documents
Document Sharing Hub
Full document details: BS EN 196-10:2016

Unless otherwise stated the densities of concentrated liquid reagents used in this European Standard (ρ) are on the basis of g/cm³ at 20 °C.

4.1 Concentrated hydrochloric acid (HCl), ρ = 1,18 to 1,19.

4.2 Dilute hydrochloric acid, 1,0 mol/l.

4.3 Dilute hydrochloric acid, 0,04 mol/l.

4.4 Acetone, ($CH_3.CO.CH_3$), ρ = 0,79.

4.5 Indicator solution. Dissolve 0,125 g of s-diphenylcarbazide $(C_6H_5NHNH)_2CO$, (1,5-diphenylcarbohydrazide) in 25 ml of acetone (4.4) in a 50 ml volumetric flask. Make up to the mark with acetone. The indicator solution will keep for one week, if kept refrigerated.

4.6 Standard chromate solution.

4.6.1 Stock solution: Dissolve 0,141 4 g dried potassium dichromate ($K_2Cr_2O_7$), dried to constant mass at (140 ± 5) °C, in water in a 1 000 ml volumetric flask and make up to the mark with water. The stock solution will keep for one month.

This solution contains 50 mg Cr (VI) in a litre.

NOTE Ready-to-use stock solution is commercially available.

4.6.2 Standard solution: Transfer 50,0 ml stock solution (4.6.1) to a 500 ml volumetric flask and make up to the mark with water.

This solution contains 5 mg Cr (VI) in a litre. The standard solution will keep for one month.

4.7 CEN standard sand, in accordance with EN 196-1.

4.8 Sodium peroxodisulfate (sodium persulfate), $Na_2S_2O_8$.

4.9 Orthophosphoric acid, H_3PO_4, (85 %).

5 Apparatus

5.1 Balance(s), analytical balance, capable of weighing to an accuracy of ± 0,000 5 g, and a laboratory balance, capable of weighing to an accuracy of ± 1 g.

5.2 Mixer, two speed in accordance with EN 196-1.

5.3 Spectrophotometer, for measuring the absorbance of a solution at 540 nm, or filter photometer equipped with a filter giving maximum transmission at approximately 540 nm.

5.4 Cells, with a light path of 10 mm.

5.5 Volumetric glassware, 50 ml, 500 ml and 1 000 ml volumetric flasks; 1,0 ml; 2,0 ml; 5,0 ml; 10,0 ml; 15,0 ml and 50,0 ml pipettes.

5.6 pH meter, capable of measuring pH to an accuracy of ± 0,05.

5.7 Filtration system, comprising a vacuum source connected to a vacuum flask fitted with a filter crucible, Buchner funnel or other suitable equipment.

Documents
Document Sharing Hub
Full document details: BS EN 196-10:2016

5.8 Filter media, of pore size 7 µm or less, composed of glass fibre, free from organic binders, or equivalent fritted glass filter.

Different filter media may be used provided that they have been shown to give chromium (VI) results which do not differ from those obtained using the reference filter media.

Some filter media may become contaminated during manufacture with substances that can reduce chromium (VI). A blank test should be carried out to ensure the suitability of the filter medium selected.

5.9 Filtration equipment.

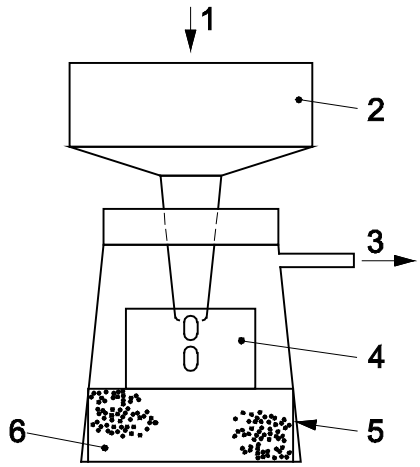

Key

1 mortar
2 filter funnel
3 to vacuum
4 low form beaker
5 filter flask
6 sand

Figure 1 — Typical arrangement of filtration equipment

Filtration equipment consisting of a Buchner funnel, (e.g. diameter 205 mm, fitted onto a 2 l filter flask), partially full of sand, inside which is a low form beaker to collect the filtrate, placed on top of the bed of sand. The apparatus is connected to a vacuum pump (see Figure 1).

Also other arrangements ensuring filtrate collection into containers may be used.

5.10 Laboratory oven, capable of maintaining a temperature of (140 ± 5) °C.

5.11 Heating plate, capable of maintaining a temperature of (280 ± 10) °C.

5.12 Timer, capable of measuring to an accuracy of ± 1 s.

6 Preparation of a test sample of cement

Immediately before chemical analysis, treat the laboratory sample, taken in accordance with EN 196-7, as follows to obtain a homogeneous test sample.

Take approximately 1 000 g of the laboratory sample by means of a sample divider or by quartering.

Documents
Document Sharing Hub
Full document details: BS EN 196-10:2016

Transfer this test sample to a clean dry container with an airtight closure and shake vigorously to mix it thoroughly.

Carry out all operations as quickly as possible and immediately seal in an airtight. container to ensure that the test sample is exposed to ambient air only for the minimum time.

7 Extraction procedure

7.1 Principle

Cement is made into a mortar using CEN standard sand and water. The mortar is mixed for a specified time and then filtered. An aliquot of filtrate is treated with s-diphenylcarbazide and acidified within a narrow range of pH. Chromium (VI) in acid solution forms a red-violet complex the absorption of which is measured spectrophotometrically at 540 nm. The water-soluble chromium (VI) content is determined from a calibration curve.

7.2 Preparation of mortar

7.2.1 Composition of mortar

The proportions by mass shall be one part of cement (see Clause 6), three parts of CEN standard sand (4.7), and one half part of water (Clause 4) (i.e. water/cement ratio 0,50).

NOTE The water to be used is analytical grade (see Clause 4)

Each batch shall consist of (450 ± 2) g of cement, (M), (1 350 ± 5) g of sand and (225 ± 1) g of water, (V_1).

Where cements to be tested are rapid setting, a water/cement ratio of 0,50 may not yield sufficient filtrate for analysis. In these cases, it is permissible to increase the water content, and hence the water/cement ratio, until sufficient filtrate (see 7.3) is obtained. This deviation should be reported.

7.2.2 Mixing of mortar

Weigh the cement and water by means of the laboratory balance (5.1). When water is added by volume it shall be dispensed with an accuracy of ± 1 ml. Mix each batch of mortar mechanically using the mixer (5.2). The timing of the various mixing stages refers to the times at which mixer power is switched on/off and shall be maintained within ± 2 s.

The mixing procedure shall be as follows:

— place the water and the cement into the bowl, taking care to avoid loss of water or cement;

— immediately the water and cement are brought into contact start the mixer at the low speed (see EN 196-1, table of mixer speeds) while starting the timing of the mixing stages. After 30 s of mixing, add the sand steadily during the next 30 s. Switch the mixer to the high speed (see EN 196-1, table of mixer speeds) and continue the mixing for an additional 30 s;

— stop the mixer for 90 s. During the first 30 s, remove by means of a rubber or plastics scraper the mortar adhering to the wall and bottom part of the bowl and place in the middle of the bowl;

— continue the mixing at the high speed for 60 s.

Normally these mixing operations are carried out automatically. Manual control of these operations and timings may be used.

Documents
Document Sharing Hub
Full document details: BS EN 196-10:2016

7.3 Filtration

Ensure that the filtration equipment (filter flask, filter crucible or Buchner funnel and filter medium and low form beaker) is dry before each use. Fit the filter crucible or Buchner funnel (5.7) and filter medium (5.8). Do not pre-wet the filter medium. Apply the vacuum and place the mortar into the filtration equipment. Filter for a maximum of 10 min to obtain a volume of 10 ml to 15 ml of filtrate.

If 10 ml is not obtained in this time, continue filtering to obtain sufficient quantity to carry out the determination(s). Report this deviation.

The filtrate may be stored for up to 8 h before determination of the chromium (VI) content but if the storage period exceeds 30 min it shall be kept in a sealed air-tight container to prevent evaporation.

Where a filtrate has a turbidity that cannot be removed by simple filtration, it may be filtered by centrifuge, filter press or filtered over a fine-pore membrane filter. Report the alternative filtration method used. No verification against the reference method is required in these cases. Where the filtrate still has turbidity the blank used with these samples should be a filtrate from the respective sample but without the addition of indicator solution.

8 Determination of chromium (VI)

8.1 General

Results of inter-laboratory testing have indicated the importance of following the precise operations, their sequence and the timings in order to obtain the quoted values for repeatability and reproducibility.

Some constituents of cement, other than chromium reducing agents purposely added, can contain reducing substances (e.g. sulfide, sulfite) that can, during the determination of soluble chromium (VI) using diphenylcarbazide in acidic conditions, lead to an artificial decrease in the amount of chromium (VI) determined. Addition of diphenylcarbazide while the solution is alkaline should suppress the effect of sulfide but may not suppress other reducing substances. It is necessary to carry out the determination with and without treatment by an oxidising agent initially, in order to observe the effects on the results in accordance with 8.3 and 8.2, respectively.

Results shall be assessed as follows:

a) if the difference between the results of the two determinations, each carried out in duplicate, is not more than $2 \times S_r$ (i.e. 2 × 0,000 015 %) (see 3.3) then the results are deemed to belong to the same population and the method without the oxidation step can be used for subsequent tests on the cement;

b) if the difference between the results of the two determinations, each carried out in duplicate, is greater than $2 \times S_r$ (i.e. 2 × 0,000 015 %) then the results are deemed to belong to different populations and the method (with respect to oxidation/without oxidation) giving the higher result shall then be used for subsequent tests on the cement.

8.2 Measurement of absorbance without oxidation

8.2.1 Construction of the calibration curve

Transfer 1,0 ml; 2,0 ml; 5,0 ml; 10,0 ml; and 15,0 ml of standard solution (4.6.2) to 50 ml volumetric flasks.

Add 5,0 ml indicator solution (4.5) and 5 ml of 0,04 mol/l hydrochloric acid (4.3). Make up to the mark with water.

Documents
Document Sharing Hub
Full document details: BS EN 196-10:2016

The calibration solutions contain respectively 0,1 mg; 0,2 mg; 0,5 mg; 1,0 mg and 1,5 mg Cr (VI) in a litre.

Measure the absorbance values against the procedural blank (3.4) at 540 nm, 15 min to 20 min after addition of the indicator solution.

Construct the calibration curve by plotting the measured absorbance values against the concentration of chromium (VI).

The validity of the calibration shall be checked at least once per month, or before use when infrequently used, by testing the mid-range sample, which shall not depart from the calibration value by more than ± 2 % of the calibrated value.

8.2.2 Sample absorbance

Within 8 h after filtration, pipette 5,0 ml, (V_2), filtrate (7.3) into a 100 ml beaker. Add 20 ml water, 5,0 ml indicator solution (4.5), shake and adjust pH (5.6) to between 2,1 and 2,5 by addition of 1,0 mol/l hydrochloric acid (normally between 0,2 and 0,6 ml corresponding to 5 to 15 drops). The steps from addition of indicator solution to adjustment of pH shall be completed within 30 s. Record the pH value. Transfer to a 50 ml, (V_3), volumetric flask. Make up to the mark with water and shake the flask.

Measure the absorbance of the solution against the procedural blank (3.4) at 540 nm, 15 min to 20 min after addition of the indicator solution.

NOTE If the concentration of chromium (VI) in the sample is greater than the range of calibration curve, repeat the determination, using a smaller aliquot (V2) of the filtrate (7.3).

8.2.3 Determination of chromium (VI) concentration

Determine the concentration, (C), of water-soluble chromium (VI) in mg/litre from the calibration curve.

8.3 Measurement of absorbance with oxidation

8.3.1 Construction of the calibration curve

8.3.1.1 Preparation of calibration solutions

Weigh (500 ± 1) mg sodium peroxodisulfate (4.8) into 250 ml wide-necked conical flasks, add 5 ml ortho-phosphoric acid (concentration 85 %) (4.9), and 2,0 ml; 4,0 ml; 10,0 ml; 20,0 ml; and 30,0 ml standard solution (4.6.2).

8.3.1.2 Oxidation and measurement of absorbance

Dilute the solutions with approximately 120 ml of water and place on a heating plate at (280 ± 10) °C for (45 ± 1) min. In order to avoid boiling retardation add a magnetic stirrer bar. At the end of the 45 min the volume of the solution should be approximately 40 ml. Avoid excessive evaporation in order to prevent decomposition of chromium (VI). Allow to cool and remove the stirrer bar.

Transfer the solutions into 100 ml, (V_3), volumetric flasks, add 5,0 ml indicator solution (4.5) and make up to the mark with water.

The calibration solutions contain respectively 0,1 mg; 0,2 mg; 0,5 mg; 1,0 mg; and 1,50 mg Cr (VI) in a litre.

Measure the absorbance of the solution against the procedural blank (3.4) at 540 nm, 15 min to 20 min after addition of the indicator solution.

AVA Documents
Document Sharing Hub

Full document details: BS EN 196-10:2016