BRITISH STANDARD

BS EN 1999-1-4:2007 +A1:2011

Incorporating corrigendum November 2009

Eurocode 9 — Design of aluminium structures —

Part 1-4: Cold-formed structural sheeting

ICS 91.010.30; 91.080.10

NO COPYING WITHOUT BSI PERMISSION EXCEPT AS PERMITTED BY COPYRIGHT LAW

BSI Documents
Document Sharing Hub
British Standards

Full document details: BS EN 1999-1-4:2007+A1:2011

National foreword

This British Standard is the UK implementation of EN 1999-1-4:2007+A1:2011, incorporating corrigendum November 2009. It supersedes BS EN 1999-1-4:2007, which is withdrawn.

The start and finish of text introduced or altered by corrigendum is indicated in the text by tags. Text altered by CEN corrigendum November 2009 is indicated in the text by ▌AC1⟩ ⟨AC1▐.

The start and finish of text introduced or altered by amendment is indicated in the text by tags. Tags indicating changes to CEN text carry the number of the CEN amendment. For example, text altered by CEN amendment A1 is indicated by ▌A1⟩ ⟨A1▐.

The structural Eurocodes are divided into packages by grouping Eurocodes for each of the main materials, concrete, steel, composite concrete and steel, timber, masonry and aluminium.

In the UK, the following national standards are superseded by the Eurocode 9 series and are withdrawn.

Eurocode	**Superseded British Standards**
EN 1999-1-1	BS 8118-2:1991 Structural use of aluminium. Specification for materials, workmanship and protection (superseded).
	DD ENV 1999-1-1:2000 Eurocode 9. Design of aluminium structures. General rules. General rules and rules for buildings (superseded).
	BS 8118-1:1991 Structural use of aluminium. Code of practice for design (partially superseded).
EN 1999-1-2	DD ENV 1999-1-2 Design of aluminium structures. General rules. Structural fire design (superseded).
EN 1999-1-3	DD ENV 1999-2:2000 Eurocode 9. Design of aluminium structures. Structures susceptible to fatigue (superseded).
	BS 8118-1:1991 Structural use of aluminium. Code of practice for design (partially superseded).
EN 1999-1-4	BS 8118-1:1991 Structural use of aluminium. Code of practice for design (partially superseded).
EN 1999-1-5	None

The UK participation in its preparation was entrusted by Technical Committee B/525, Building and civil engineering structures, to Subcommittee B/525/9, Structural use of aluminium.

A list of organizations represented on this subcommittee can be obtained on request to its secretary.

This British Standard was published under the authority of the Standards Policy and Strategy Committee on 30 March 2007

© BSI 2011

ISBN 978 0 580 72626 2

Amendments/corrigenda issued since publication

Date	Comments
31 August 2010	Implementation of CEN corrigendum November 2009
30 November 2011	Implementation of CEN amendment A1:2011

Documents
Document Sharing Hub

Full document details: BS EN 1999-1-4:2007+A1:2011

Where a normative part of this EN allows for a choice to be made at the national level, the range and possible choice will be given in the normative text, and a note will qualify it as a Nationally Determined Parameter (NDP). NDPs can be a specific value for a factor, a specific level or class, a particular method or a particular application rule if several are proposed in the EN.

To enable EN 1999 to be used in the UK, the NDPs have been published in a National Annex, which is available from BSI.

This publication does not purport to include all the necessary provisions of a contract. Users are responsible for its correct application.

Compliance with a British Standard cannot confer immunity from legal obligations.

Documents
Document Sharing Hub
Full document details: BS EN 1999-1-4:2007+A1:2011

blank

Documents
Document Sharing Hub

Full document details: BS EN 1999-1-4:2007+A1:2011

EUROPEAN STANDARD

NORME EUROPÉENNE

EUROPÄISCHE NORM

EN 1999-1-4:2007/A1

August 2011

ICS 91.010.30; 91.080.10

English Version

Eurocode 9: Design of aluminium structures - Part 1-4: Cold-formed structural sheeting

Eurocode 9 - Calcul des structures en aluminium - Partie 1-4: Tôles de structure formées à froid

Eurocode 9: Bemessung und Konstruktion von Aluminiumtragwerken - Teil 1-4: Kaltgeformte Profiltafeln

This amendment A1 modifies the European Standard EN 1999-1-4:2007; it was approved by CEN on 8 April 2011.

CEN members are bound to comply with the CEN/CENELEC Internal Regulations which stipulate the conditions for inclusion of this amendment into the relevant national standard without any alteration. Up-to-date lists and bibliographical references concerning such national standards may be obtained on application to the CEN-CENELEC Management Centre or to any CEN member.

This amendment exists in three official versions (English, French, German). A version in any other language made by translation under the responsibility of a CEN member into its own language and notified to the CEN-CENELEC Management Centre has the same status as the official versions.

CEN members are the national standards bodies of Austria, Belgium, Bulgaria, Croatia, Cyprus, Czech Republic, Denmark, Estonia, Finland, France, Germany, Greece, Hungary, Iceland, Ireland, Italy, Latvia, Lithuania, Luxembourg, Malta, Netherlands, Norway, Poland, Portugal, Romania, Slovakia, Slovenia, Spain, Sweden, Switzerland and United Kingdom.

EUROPEAN COMMITTEE FOR STANDARDIZATION
COMITÉ EUROPÉEN DE NORMALISATION
EUROPÄISCHES KOMITEE FÜR NORMUNG

Management Centre: Avenue Marnix 17, B-1000 Brussels

© 2011 CEN All rights of exploitation in any form and by any means reserved worldwide for CEN national Members.

Ref. No. EN 1999-1-4:2007/A1:2011: E

Documents
Document Sharing Hub

Full document details: BS EN 1999-1-4:2007+A1:2011

Contents

Page

Foreword **4**

National Annex for EN 1999-1-4 ..... **6**

1 General **7**

1.1 Scope 7
1.1.1 Scope of EN 1999 7
1.1.2 Scope of EN 1999-1-4 7
1.2 Normative references 8
1.2.1 General references 8
1.2.2 References on structural design 8
1.2.3 Materials and materials testing 8
1.2.4 References on fasteners 8
1.2.5 Other references 8
1.3 Terms and definitions 9
1.4 Symbols 10
1.5 Geometry and conventions for dimensions 10
1.5.1 Form of sections 10
1.5.2 Form of stiffeners 10
1.5.3 Cross-section dimensions 11
1.5.4 Convention for member axis 11

2 Basis of design **12**

3 Materials **13**

3.1 General 13
3.2 Structural aluminium alloys 13
3.2.1 Material properties 13
3.2.2 Thickness and geometrical tolerances 14
3.3 Mechanical fasteners 15

4 Durability **15**

5 Structural analysis **16**

5.1 Influence of rounded corners 16
5.2 Geometrical proportions 17
5.3 Structural modelling for analysis 17
5.4 Flange curling 18
5.5 Local and distortional buckling 19
5.5.1 General 19
5.5.2 Plane cross-section parts without stiffeners 19
5.5.3 Plane cross-section parts with intermediate stiffeners 20
5.5.4 Trapezoidal sheeting profiles with intermediate stiffeners 24

6 Ultimate limit states **31**

6.1 Resistance of cross-sections 31
6.1.1 General 31
6.1.2 Axial tension 31
6.1.3 Axial compression 31
6.1.4 Bending moment 32
6.1.5 Shear force 34
6.1.6 Torsion 35
6.1.7 Local transverse forces 35
6.1.8 Combined tension and bending 38
6.1.9 Combined compression and bending 39
6.1.10 Combined shear force, axial force and bending moment 39
6.1.11 Combined bending moment and local load or support reaction 40

AVA Documents
Document Sharing Hub

Full document details: BS EN 1999-1-4:2007+A1:2011

6.2 Buckling resistance 40
6.2.1 General 40
6.2.2 Axial compression 41
6.2.3 Bending and axial compression 41
6.3 Stressed skin design 42
6.3.1 General 42
6.3.2 Diaphragm action 42
6.3.3 Necessary conditions 43
6.3.4 Profiled aluminium sheet diaphragms 44
6.4 Perforated sheeting with the holes arranged in the shape of equilateral triangles 45

7 Serviceability limit states 46

7.1 General 46
7.2 Plastic deformation 46
7.3 Deflections 46

8 Joints with mechanical fasteners 47

8.1 General 47
8.2 Blind rivets 48
8.2.1 General 48
8.2.2 Design resistances of riveted joints loaded in shear 48
8.2.3 Design resistances for riveted joints loaded in tension 48
8.3 Self-tapping / self-drilling screws 49
8.3.1 General 49
8.3.2 Design resistance of screwed joints loaded in shear 49
8.3.3 Design resistance of screwed joints loaded in tension 50

9 Design assisted by testing 52

Annex A [normative] – Testing procedures 53

A.1 General 53
A.2 Tests on profiled sheets 53
A.2.1 General 53
A.2.2 Single span test 54
A.2.3 Double span test 54
A.2.4 Internal support test 54
A.2.5 End support test 56
A.3 Evaluation of test results 57
A.3.1 General 57
A.3.2 Adjustment of test results 57
A.3.3 Characteristic values 58
A.3.4 Design values 59
A.3.5 Serviceability 59

Annex B [informative] – Durability of fasteners 60

Bibliography 62

Documents
Document Sharing Hub
Full document details: BS EN 1999-1-4:2007+A1:2011

Foreword

This European Standard (EN 1999-1-4:2007) has been prepared by Technical Committee CEN/TC250 « Structural Eurocodes », the secretariat of which is held by BSI.

This European Standard shall be given the status of a national standard, either by publication of an identical text or by endorsement, at the latest by August 2007, and conflicting national standards shall be withdrawn at the latest by March 2010.

This European Standard supersedes ENV 1999-1-1:1998, ENV 1999-1-2:1998 and ENV 1999-2:1998.

CEN/TC 250 is responsible for all Structural Eurocodes.

According to the CEN/CENELEC Internal Regulations, the national standards organizations of the following countries are bound to implement this European Standard:

Austria, Bulgaria, Belgium, Cyprus, Czech Republic, Denmark, Estonia, Finland, France, Germany, Greece, Hungary, Iceland, Ireland, Italia, Latvia, Lithuania, Luxemburg, Malta, Netherlands, Norway, Poland, Portugal, Romania, Slovakia, Slovenia, Spain, Sweden, Switzerland and the United Kingdom

Background of the Eurocode programme

In 1975, the Commission of the European Community decided on an action programme in the field of construction, based on article 95 of the Treaty. The objective of the programme was the elimination of technical obstacles to trade and the harmonisation of technical specifications.

Within this action programme, the Commission took the initiative to establish a set of harmonised technical rules for the design of construction works, which, in a first stage, would serve as an alternative to the national rules in force in the Member States and, ultimately, would replace them.

For fifteen years, the Commission, with the help of a Steering Committee with Representatives of Member States, conducted the development of the Eurocodes programme, which led to the first generation of European codes in the 1980s.

In 1989, the Commission and the Member States of the EU and EFTA decided, on the basis of an agreement[1] between the Commission and CEN, to transfer the preparation and the publication of the Eurocodes to the CEN through a series of Mandates, in order to provide them with a future status of European Standard (EN). This links de facto the Eurocodes with the provisions of all the Council's Directives and/or Commission's Decisions dealing with European standards (e.g. the Council Directive 89/106/EEC on construction products - CPD - and Council Directives 93/37/EEC, 92/50/EEC and 89/440/EEC on public works and services and equivalent EFTA Directives initiated in pursuit of setting up the internal market).

The Structural Eurocode programme comprises the following standards generally consisting of a number of Parts:

EN 1990	Eurocode 0:	Basis of Structural Design
EN 1991	Eurocode 1:	Actions on structures
EN 1992	Eurocode 2:	Design of concrete structures
EN 1993	Eurocode 3:	Design of steel structures
EN 1994	Eurocode 4:	Design of composite steel and concrete structures
EN 1995	Eurocode 5:	Design of timber structures
EN 1996	Eurocode 6:	Design of masonry structures
EN 1997	Eurocode 7:	Geotechnical design
EN 1998	Eurocode 8:	Design of structures for earthquake resistance
EN 1999	Eurocode 9:	Design of aluminium structures

[1] Agreement between the Commission of the European Communities and the European Committee for Standardisation (CEN) concerning the work on EUROCODES for the design of building and civil engineering works (BC/CEN/03/89).

AVA Documents
Document Sharing Hub
Full document details: BS EN 1999-1-4:2007+A1:2011

Eurocode standards recognise the responsibility of regulatory authorities in each Member State and have safeguarded their right to determine values related to regulatory safety matters at national level where these continue to vary from State to State.

Status and field of application of Eurocodes

The Member States of the EU and EFTA recognise that Eurocodes serve as reference documents for the following purposes:

- as a means to prove compliance of building and civil engineering works with the essential requirements of Council Directive 89/106/EEC, particularly Essential Requirement No.1 – Mechanical resistance and stability, and Essential Requirement No 2 – Safety in case of fire
- as a basis for specifying contracts for the execution of construction works and related engineering services
- as a framework for drawing up harmonised technical specifications for construction products (En's and ETA's)

The Eurocodes, as far as they concern the construction works themselves, have a direct relationship with the Interpretative Documents[2] referred to in Article 12 of the CPD, although they are of a different nature from harmonised product standards[3]. Therefore, technical aspects arising from the Eurocodes work need to be adequately considered by CEN Technical Committees and/or EOTA Working Groups working on product standards with a view to achieving full compatibility of these technical specifications with the Eurocodes.

The Eurocode standards provide common structural design rules for everyday use for the design of whole structures and component products of both a traditional and an innovative nature. Unusual forms of construction or design conditions are not specifically covered and additional expert consideration will be required by the designer in such cases.

National standards implementing Eurocodes

The National Standards implementing Eurocodes will comprise the full text of the Eurocode (including any annexes), as published by CEN, which may be preceded by a National title page and National foreword, and may be followed by a National annex [informative].

The National Annex (informative) may only contain information on those parameters which are left open in the Eurocode for national choice, known as Nationally Determined Parameters, to be used for the design of buildings and civil engineering works to be constructed in the country concerned, i.e. :

– values for partial factors and/or classes where alternatives are given in the Eurocode;
– values to be used where a symbol only is given in the Eurocode;
– geographical and climatic data specific to the Member State, e.g. snow map;
– the procedure to be used where alternative procedures are given in the Eurocode;
– references to non-contradictory complementary information to assist the user to apply the Eurocode.

Links between Eurocodes and harmonised technical specifications (EN's and ETA's) for products

There is a need for consistency between the harmonised technical specifications for construction products and the technical rules for works[4]. Furthermore, all the information accompanying the CE Marking of the

---

[2] According to Art. 3.3 of the CPD, the essential requirements (ERs) shall be given concrete form in interpretative documents for the creation of the necessary links between the essential requirements and the mandates for harmonised ENs and ETAGs/ETAs.

[3] According to Art. 12 of the CPD the interpretative documents shall :

a) give concrete form to the essential requirements by harmonising the terminology and the technical bases and indicating classes or levels for each requirement where necessary ;

b) indicate methods of correlating these classes or levels of requirement with the technical specifications, e.g. methods of calculation and of proof, technical rules for project design, etc. ;

c) serve as a reference for the establishment of harmonised standards and guidelines for European technical approvals.

The Eurocodes, *de facto*, play a similar role in the field of the ER 1 and a part of ER 2.

[4] see Art.3.3 and Art.12 of the CPD, as well as clauses 4.2, 4.3.1, 4.3.2 and 5.2 of ID 1.

Documents
Document Sharing Hub
Full document details: BS EN 1999-1-4:2007+A1:2011

construction products which refer to Eurocodes shall clearly mention which Nationally Determined Parameters have been taken into account.

Foreword to amendment A1

This document (EN 1999-1-4:2007/A1:2011) has been prepared by Technical Committee CEN/TC 250 “Structural Eurocodes”, the secretariat of which is held by BSI.

This Amendment to the European Standard EN 1999-1-4:2007 shall be given the status of a national standard, either by publication of an identical text or by endorsement, at the latest by August 2012, and conflicting national standards shall be withdrawn at the latest by August 2012.

Attention is drawn to the possibility that some of the elements of this document may be the subject of patent rights. CEN [and/or CENELEC] shall not be held responsible for identifying any or all such patent rights.

According to the CEN/CENELEC Internal Regulations, the national standards organizations of the following countries are bound to implement this European Standard: Austria, Belgium, Bulgaria, Croatia, Cyprus, Czech Republic, Denmark, Estonia, Finland, France, Germany, Greece, Hungary, Iceland, Ireland, Italy, Latvia, Lithuania, Luxembourg, Malta, Netherlands, Norway, Poland, Portugal, Romania, Slovakia, Slovenia, Spain, Sweden, Switzerland and the United Kingdom.

National Annex for EN 1999-1-4

This standard gives alternative procedures, values and recommendations for classes with notes indicating where national choices may have to be made. Therefore the National Standard implementing EN 1999-1-4 should have a National Annex containing all Nationally Determined Parameters to be used for the design of aluminium structures to be constructed in the relevant country.

National choice is allowed in EN 1999-1-4 through clauses:

2(3)
2(4)
2(5)
3.1(3)
7.3(3)
A.1(1)
A.3.4(3)

Documents
Document Sharing Hub

Full document details: BS EN 1999-1-4:2007+A1:2011

1 General

1.1 Scope

1.1.1 Scope of EN 1999

(1)P EN 1999 applies to the design of buildings and civil engineering and structural works in aluminium. It complies with the principles and requirements for the safety and serviceability of structures, the basis of their design and verification that are given in EN 1990 – Basis of structural design.

(2) EN 1999 is only concerned with requirements for resistance, serviceability, durability and fire resistance of aluminium structures. Other requirements, e.g. concerning thermal or sound insulation, are not considered.

(3) EN 1999 is intended to be used in conjunction with:

- EN 1990 "Basis of structural design"
- EN 1991 "Actions on structures"
- European Standards construction products relevant for aluminium structures
- EN 1090-1: Execution of steel structures and aluminium structures – Part 1: Requirements for conformity assessment of structural components[5]
- EN 1090-3: Execution of steel structures and aluminium structures – Part 3: Technical requirements for aluminium structures[5]

(4) EN 1999 is subdivided in five parts:

EN 1999-1-1 Design of Aluminium Structures: General structural rules.

EN 1999-1-2 Design of Aluminium Structures: Structural fire design.

EN 1999-1-3 Design of Aluminium Structures: Structures susceptible to fatigue.

EN 1999-1-4 Design of Aluminium Structures: Cold-formed structural sheeting.

EN 1999-1-5 Design of Aluminium Structures: Shell structures.

1.1.2 Scope of EN 1999-1-4

(1)P EN 1999-1-4 gives design requirements for cold-formed trapezoidal aluminium sheeting. It applies to cold-formed aluminium products made from hot rolled or cold rolled sheet or strip that have been cold-formed by such processes as cold-rolled forming or press-breaking. The execution of aluminium structures made of cold-formed sheeting is covered in EN 1090-3.

NOTE The rules in this part complement the rules in other parts of EN 1999-1.

(2) Methods are also given for stressed-skin design using aluminium sheeting as a structural diaphragm.

(3) This part does not apply to cold-formed aluminium profiles like C-, Z- etc profiles nor cold-formed and welded circular or rectangular hollow sections.

(4) EN 1999-1-4 gives methods for design by calculation and for design assisted by testing. The methods for the design by calculation apply only within stated ranges of material properties and geometrical properties for which sufficient experience and test evidence is available. These limitations do not apply to design by testing.

(5) EN 1999-1-4 does not cover load arrangement for loads during execution and maintenance.

[5] To be published

Documents
Document Sharing Hub
Full document details: BS EN 1999-1-4:2007+A1:2011

1.2 Normative references

(1) The following referenced documents are indispensable for the application of this document. For dated references, only the edition cited applies. For undated references, the latest edition of the referenced document (including any amendments) applies.

1.2.1 General references

EN 1090-1:	Execution of steel structures and aluminium structures – Part 1: Requirements for conformity assessment of structural components[6]
EN 1090-3:	Execution of steel structures and aluminium structures – Part 3: Technical requirements for aluminium structures[6]

1.2.2 References on structural design

EN 1990	Eurocode 0 - Basis of structural design
EN 1991	Eurocode 1 – Action on structures – All parts
EN 1995-1-1	Eurocode 5: Design of timber structures - Part 1-1 General rules and rules for buildings
EN 1999-1-1	Eurocode 9: Design of aluminium structures - Part 1-1 General structural rules

1.2.3 Materials and materials testing

[AC1⟩ EN 485-2:2008 ⟨AC1]	Aluminium and aluminium alloys - Sheet, strip and plate - Part 2: Mechanical properties
[AC1⟩ EN 508-2 ⟨AC1]	Roofing products from metal sheet - Specification for self-supporting products of steel, aluminium or stainless steel sheet - Part 2: Aluminium
[AC1⟩ EN 1396:2007 ⟨AC1]	Aluminium and aluminium alloys - Coil coated sheet and strip for general applications - Specifications
EN 10002-1	Metallic materials - Tensile testing - Part 1: Method of test at ambient temperature

[AC1⟩ *Text deleted* ⟨AC1]

1.2.4 References on fasteners

EN ISO 1479	Hexagon head tapping screws
EN ISO 1481	Slotted pan head tapping screws
EN ISO 15480	Hexagon washer head drilling screws with tapping screw thread
EN ISO 15481	Cross recessed pan head drilling screws with tapping screw thread
EN ISO 15973	Closed end blind rivets with break pull mandrel and protruding head
EN ISO 15974	Closed end blind rivets with break pull mandrel and countersunk head
EN ISO 15977	Open end blind rivets with break pull mandrel and protruding head
EN ISO 15978	Open end blind rivets with break pull mandrel and countersunk head
EN ISO 15981	Open end blind rivets with break pull mandrel and protruding head
EN ISO 15982	Open end blind rivets with break pull mandrel and countersunk head
ISO 7049:1994	Cross recessed pan head tapping screws

1.2.5 Other references

EN ISO 12944-2	Paints and varnishes - Corrosion protection of steel structures by protective paint systems - Part 2: Classification of environments

[6] To be published

Documents
Document Sharing Hub
Full document details: BS EN 1999-1-4:2007+A1:2011

1.3 Terms and definitions

Supplementary to EN 1999-1-1, for the purposes of EN 1999-1-4, the following definitions apply:

1.3.1

base material

the flat sheet aluminium material out of which profiled sheets are made by cold forming

1.3.2

proof strength of base material

the 0,2 % proof strength f_o of the base material

1.3.3

diaphragm action

structural behaviour involving in-plane shear in the sheeting

1.3.4

partial restraint

restriction to some extent of the lateral or rotational displacement of a cross-section part, that increases its buckling resistance

1.3.5

restraint

full restriction of the lateral displacement or rotational movement of a plane cross-section part, that increases its buckling resistance

1.3.6

slenderness parameter

a normalised, material related slenderness ratio

1.3.7

stressed-skin design

a design method that allows for the contribution made by diaphragm action in the sheeting to the stiffness and strength of a structure

1.3.8

support

a location at which a member is able to transfer forces or moments to a foundation, or to another structural component.

1.3.9

effective thickness

a design value of the thickness to allow for local buckling of plane cross section part.

1.3.10

reduced effective thickness

a design value of the thickness to allow for distortional buckling of stiffeners in a second step of the calculation procedure for plane cross section parts, where local buckling is allowed for in the first step .

Documents
Document Sharing Hub
Full document details: BS EN 1999-1-4:2007+A1:2011

1.4 Symbols

(1) In addition to those given in EN 1999-1-1, the following main symbols are used:

Section 1 to 6

C rotational spring stiffness;
k linear spring stiffness;
θ rotation;
b_p notional flat width of plane cross-section part;
h_w web height, measured between system lines of flanges;
s_w slant height of web, measured between midpoints of corners;
χ_d reduction factor for distortional buckling (flexural buckling of stiffeners);
φ is the angle between two plane elements;
ϕ is the slope of the web relative to the flanges.

Section 8 Joints with mechanical fasteners

d_w diameter of the washer or the head of the fastener;
$f_{u,min}$ minor ultimate tensile strength of both connected parts;
$f_{u,sup}$ ultimate tensile strength of the supporting component into which a screw is fixed;
f_y yield strength of supporting component of steel;
t_{min} thickness of the thinner connected part or sheet;
t_{sup} thickness of the supporting member in which the screw is fixed;

(2) Further symbols are defined where they first occur.

1.5 Geometry and conventions for dimensions

1.5.1 Form of sections

(1) Cold-formed sheets have within the permitted tolerances a constant thickness nominal over their entire length and have a uniform cross-section along their length.

(2) The cross-sections of cold formed profiled sheets essentially comprise a number of plane cross-section parts joined by curved parts.

(3) Typical forms of cross-sections for cold formed profiled sheets are shown in Figure 1.1.

(4) Cross-sections of cold formed sheets can either be unstiffened or incorporate longitudinal stiffeners in their webs or flanges, or in both.

1.5.2 Form of stiffeners

(1) Typical forms of stiffeners for cold formed sheets are shown in Figure 1.2;

Documents
Document Sharing Hub
Full document details: BS EN 1999-1-4:2007+A1:2011

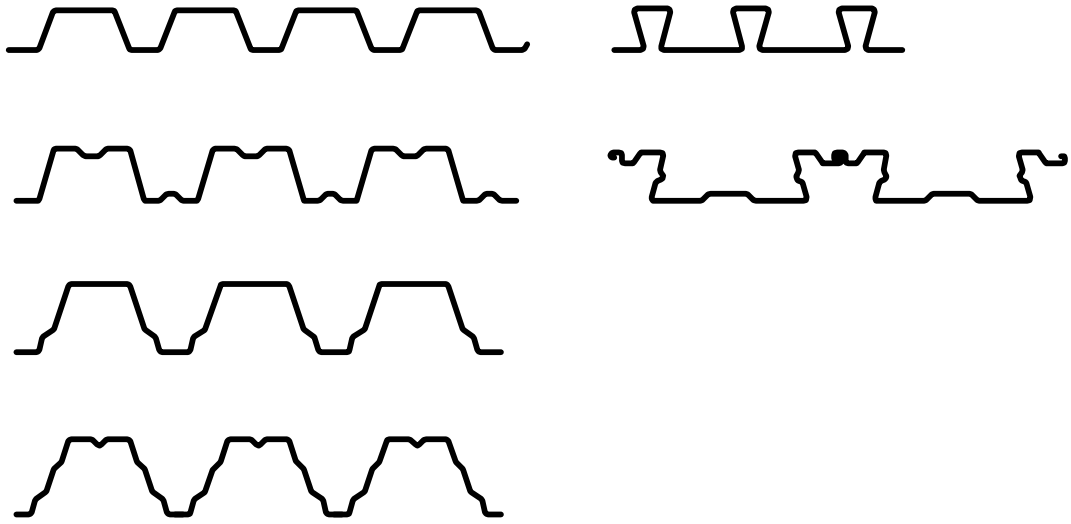

Figure 1.1 - Examples of cold-formed sheeting

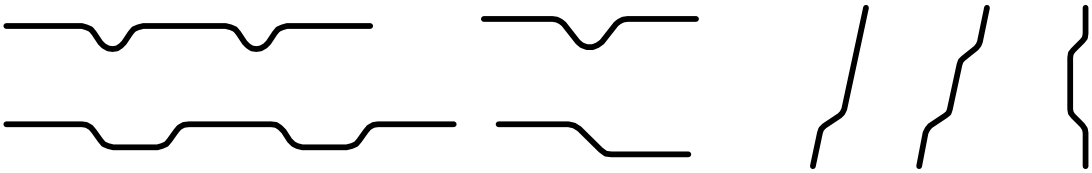

Figure 1.2 - Typical intermediate longitudinal stiffeners

1.5.3 Cross-section dimensions

(1) Overall dimensions of cold-formed sheeting, including overall width b, overall height h, internal bend radius r and other external dimensions denoted by symbols without subscripts, are measured to the outer contour of the section, unless stated otherwise, see Figure 5.1.

(2) Unless stated otherwise, the other cross-sectional dimensions of cold-formed sheeting, denoted by symbols with subscripts, such as b_p, h_w or s_w, are measured either to the midline of the material or the midpoint of the corner.

(3) In the case of sloping webs of cold-formed profiled sheets, the slant height s is measured parallel to the slope.

(4) The developed height of a web is measured along its midline, including any web stiffeners.

(5) The developed width of a flange is measured along its midline, including any intermediate stiffeners.

(6) The thickness t is an aluminium design thickness if not otherwise stated. See 3.2.2.

1.5.4 Convention for member axis

(1) For profiled sheets the following axis convention is used in EN 1999-1-4:

- y-y axis parallel to the plane of sheeting;
- z-z axis perpendicular to the plane of sheeting.

Documents
Document Sharing Hub
Full document details: BS EN 1999-1-4:2007+A1:2011

2 Basis of design

(1)P The design of cold-formed sheeting shall be in accordance with the general rules given in EN 1990 and EN 1999-1-1.

(2)P Appropriate partial factors shall be adopted for ultimate limit states and serviceability limit states.

(3) For verification by calculation at ultimate limit states the partial factor γ_M shall be taken as follows:

- resistance of cross-sections and members to instability: γ_{M1}
- resistance of cross-sections in tension to fracture: γ_{M2}
- resistance of joints: γ_{M3}

NOTE Numerical values for γ_{Mi} may be defined in the National Annex. The following numerical values are recommended for buildings:

$\gamma_{M1} = 1{,}10$

$\gamma_{M2} = 1{,}25$

$\gamma_{M3} = 1{,}25$

(4) For verifications at serviceability limit states the partial factor $\gamma_{M,ser}$ should be used.

NOTE Numerical values for $\gamma_{M,ser}$ may be defined in the National Annex. The following numerical value is recommended for buildings:

$\gamma_{M,ser} = 1{,}0$.

(5) For the design of structures made of cold-formed sheeting a distinction should be made between "**Structural Classes**" dependent on its function in the structure defined as follows:

Structural Class I: Construction where cold-formed sheeting is designed to contribute to the overall strength and stability of the structure, see 6.3.3;

Structural Class II: Construction where cold-formed sheeting is designed to contribute to the strength and stability of individual structural components;

Structural Class III: Construction where cold-formed sheeting is used as a component that only transfers loads to the structure.

NOTE 1 National Annex may give rules for the use of Structural Classes and the connection to Consequence Classes in EN 1990.

NOTE 2 For Structural Class I and II the requirement for execution should be given in the execution specification, see EN 1090-3

Documents
Document Sharing Hub
Full document details: BS EN 1999-1-4:2007+A1:2011

3 Materials

3.1 General

(1) The methods for design by calculation given in EN 1999-1-4 may be used for the structural alloys in the tempers listed in table 3.1.

(2) For design by calculation given in EN 1999-1-4 the 0,2 proof strength f_o should be at least $f_o = 165$ N/mm^2.

(3) Aluminium sheet and strip used for cold-formed profile sheeting should be suitable for the specific cross section depending on cold forming and cold forming process.

NOTE For other aluminium materials and products see National Annex.

3.2 Structural aluminium alloys

3.2.1 Material properties

(1) The characteristic values of 0,2 proof strength f_o and tensile strength f_u have been obtained by adopting the values for minimum $R_{p0,2}$ and R_m direct from the relevant product standards.

(2) It may be assumed that the properties in compression are the same as those in tension.

(3) If partially plastic moment resistance is utilised, the ratio of the characteristic ultimate tensile strength f_u to the characteristic 0,2 proof strength f_o should be not less than 1,2.

(4) The material constants (modulus of elasticity etc) should be taken as given in EN 1999-1-1.

Documents
Document Sharing Hub
Full document details: BS EN 1999-1-4:2007+A1:2011

Table 3.1 - Characteristic values of 0,2% proof strength f_o, ultimate tensile strength, f_u, elongation A_{50}, for sheet and strip for tempers with f_o > 165 N/mm^2 and thickness between 0,5 and 6 mm

Designation numerical EN AW-	Designation chemical EN AW-	Durability rating 5)	Temper 1), 2), 3)	Thickness up to mm	f_u R_m N/mm^2	f_o $R_{p0,2}$ 1) N/mm^2	A_{50} % 4)
3003	AlMn1Cu	A	H18	3,0	190	170	2
			H48	3,0	180	165	2
3004	AlMn1Mg1	A	H14 | H24/H34	6 | 3	220	180 | 170	2-3 | 4
			H16 | H26/H36	4 | 3	240	200 | 190	1-2 | 3
			H18 | H28/H38	3 | 1,5	260	230 | 220	1-2 | 3
			H44	3	210	180	4
			H46	3	230	200	3
			H48	3	260	220	3
3005	AlMn1Mg0,5	A	H16	4	195	175	2
			H18 | H28	3	220	200 | 190	2 | 2-3
			H48	3	210	180	2
3103	AlMn1	A	H18	3	185	165	2
3105	AlMn0,5Mg0,5	A	H18 | H28	3 | 1,5	195	180 | 170	1 | 2
			H48	3	195	170	2
5005	AlMg1(B)	A	H18	3	185	165	2
5052	AlMg2,5	A	H14	6	230	180	3-4
			H16 | H26/H36	6	250	210 | 180	3 | 4-6
			H18 | H28/H38	3	270	240 | 210	2 | 3-4
			H46	3	250	180	4-5
			H48	3	270	210	3-4
5251	[AC1] AlMg2Mn0,3 [AC1]	A	H14	6	210	170	2-4
			H16 | H26/H36	4	230	200 | 170	2-3 | 4-7
			H18 | H28/H38	3	255	230 | 200	2 | 3
			H46	3	210	165	4-5
			H48	3	250	215	3
[A1] 6025-7072 alclad 6)	AlMg2,5SiMnCu-AlZn1 alclad 6)	A	H34	5	210	165	2-3
			H36	5	220	185	2-4 [A1]

1) The values for temper H1x, H2x, H3x according to [AC1] EN 485-2:2008 [AC1]

2) The values for temper H4x (coil coated sheet and strip) according to [AC1] EN 1396:2007 [AC1]

3) If two (three) tempers are specified in one line, tempers separated by "|" have different technological values, but separated by "/" have same values. (The tempers show differences only for f_o and A_{50}.)

4) A_{50} may be depending on the thickness of material in the listed range, therefore sometimes also a A_{50}-range is given.

5) Durability rating, see EN 1999-1-1

[A1] 6) EN AW-6025-7072 alclad (EN AW-AlMg2,5SiMnCu-AlZn1 alclad) is a composite material with core material EN AW-6025 and a cladding on both sides with EN AW-7072. For reasons of durability the cladding should have a thickness of at least 4% of the overall thickness of the material on each side. If the thickness of the cladding exceeds 5% this fact should be considered in the structural calculations, i.e. only the core thickness of the composite sheet should be taken in account. For these reasons the minimum cladding thickness of 4% and the minimum core thickness should be specified in the execution specification in order that the constructor can procure the corresponding constituent products with inspection certificate 3.1. [A1]

Documents
Document Sharing Hub

Full document details: BS EN 1999-1-4:2007+A1:2011

3.2.2 Thickness and geometrical tolerances

(1) The provisions for design by calculation given in this EN 1999-1-4 may be used for alloy within the following ranges of nominal thickness t_{nom} of the sheeting exclusive of organic coatings:

$t_{nom} \geq 0{,}5$ mm

(2) The nominal thickness t_{nom} should be used as design thickness t if a negative deviation is less than 5 %. Otherwise

$$t = t_{nom}(100 - dev)/95 \tag{3.1}$$

where dev is the negative deviation in %.

(3) Tolerances for roofing products are given in EN 508-2.

3.3 Mechanical fasteners

(1) The following types of mechanical fasteners may be used:

- self-tapping screws as thread-forming self-tapping screws or self-drilling self-tapping screws according to standards listed in 8.3;
- blind rivets according to standards listed in 8.2.

(2) The characteristic shear resistance $F_{v,Rk}$ and the characteristic tension resistance $F_{t,Rk}$ of the mechanical fasteners should be calculated according to 8.2 and 8.3.

(3) For details concerning suitable self-tapping screws, and self-drilling screws and blind rivets, reference should be made to EN 1090-3.

(4) Characteristic shear resistance and characteristic tension resistance of mechanical fasteners not covered in this European Standard may be taken from ETA certifications.

4 Durability

(1) For basic requirements, see Section 4 of EN 1999-1-1

(2) Special attention should be given to cases in which different materials are intended to act compositely, if these materials are such that electrochemical phenomena might produce conditions leading to corrosion.

NOTE For corrosion resistance of fasteners for the environmental corrosivity categories following EN ISO 12944-2, see Annex B.

(3) The environmental conditions prevailing from the time of manufacture, including those during transport and storage on site, should be taken into account.

Documents
Document Sharing Hub
Full document details: BS EN 1999-1-4:2007+A1:2011

5 Structural analysis

5.1 Influence of rounded corners

(1) In cross-sections with rounded corners, the notional flat widths b_p of the plane cross-section parts should be measured from the midpoints of the adjacent corner cross-section parts, as indicated in Figure 5.1.

(2) In cross-sections with rounded corners, the calculation of section properties should be based upon the actual geometry of the cross-section.

(3) Unless more appropriate methods are used to determine the section properties the following approximate procedure may be used. The influence of rounded corners on section properties may be neglected if the internal radius $r \leq 10t$ and $r \leq 0{,}15b_p$ and the cross-section may be assumed to consist of plane cross-section parts with sharp corners.

(4) The influence of rounded corners on section properties may be taken into account by reducing the properties calculated for an otherwise similar cross-section with sharp corners, using the following approximations:

$$A_g \approx A_{g,sh}(1-\delta) \tag{5.1a}$$

$$I_g \approx I_{g,sh}\,(1-2\delta) \tag{5.1b}$$

with:

$$\delta = 0{,}43 \cdot \sum_{j=1}^{n}(r_j \varphi_j / 90) \Big/ \sum_{i=1}^{m} b_{p,i} \tag{5.1c}$$

where:

A_g is the area of the gross cross-section;

$A_{g,sh}$ is the value of A_g for a cross-section with sharp corners;

$b_{p,i}$ is the notional flat width of plane cross-section part i for a cross-section with sharp corners;

I_g is the second moment of area of the gross cross-section;

$I_{g,sh}$ is the value of I_g for a cross-section with sharp corners;

φ is the angle between two plane elements;

m is the number of plane cross-section parts;

n is the number of curved cross-section parts without consideration of the curvature of stiffeners in webs and flanges;

r_j is the internal radius of curved cross-section part.

(5) The reductions given by expression (5.1) may also be applied in calculating the effective section properties A_{eff} and $I_{y,eff}$ provided that the notional flat widths of the plane cross-section parts are measured to the points of intersection of their midlines.

(6) Where the internal radius $r \geq 0{,}04tE / f_o$, then the resistance of the cross-section should be determined by tests.

Documents
Document Sharing Hub

Full document details: BS EN 1999-1-4:2007+A1:2011

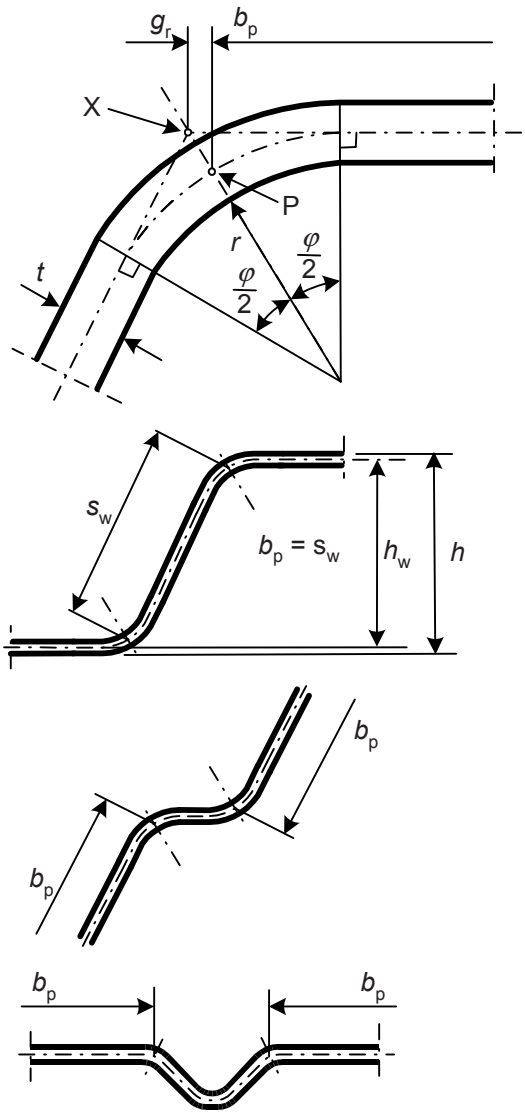

(a) midpoint of corner or bend

X is intersection of midlines
P is midpoint of corner

$r_m = r + t/2$

$g_r = r_m\left(\tan(\frac{\varphi}{2}) - \sin(\frac{\varphi}{2})\right)$

(b) notional flat width b_p for a web
(b_p = slant height s_w)

(c) notional flat width b_p of plane parts adjacent to web stiffener

(d) notional flat width b_p of flat parts adjacent to flange stiffener

Figure 5.1 - Notional widths of plane cross-section parts b_p allowing for corner radii

5.2 Geometrical proportions

(1) The provisions for design by calculation given in EN 1999-1-4 should not be applied to cross-sections outside the range of width-to-thickness ratios b/t and s_w/t given in (2).

(2) The maximum width-to-thickness ratios are:

- for compressed flanges $b/t \leq 300$
- for webs $s_w/t \leq 0{,}5E/f_o$

NOTE These limits b/t and s_w/t given in (2) may be assumed to represent the field for which sufficient experience and verification by testing is available. Cross-sections with larger width-to-thickness ratios may also be used, provided that their resistance at ultimate limit states and their behaviour at serviceability limit states are verified by testing and/or by calculations, where the results are confirmed by an appropriate number of tests.

5.3 Structural modelling for analysis

(1) The parts of a cross-section may be modelled for analysis as indicated in Table 5.1

(2) The mutual influence of multiple stiffeners should be taken into account.

Documents
Document Sharing Hub
Full document details: BS EN 1999-1-4:2007+A1:2011