BS EN 289:2014

BSI Standards Publication

Plastics and rubber machines — Compression moulding machines and transfer moulding machines — Safety requirements

bsi.

...making excellence a habit.™

Document Sharing Hub

National foreword

This British Standard is the UK implementation of EN 289:2014. It supersedes BS EN 289:2004+A1:2008 which is withdrawn.

The UK participation in its preparation was entrusted to Technical Committee MCE/3/2, Rubber and plastics machine - Safety.

A list of organizations represented on this committee can be obtained on request to its secretary.

This publication does not purport to include all the necessary provisions of a contract. Users are responsible for its correct application.

© The British Standards Institution 2014.
Published by BSI Standards Limited 2014

ISBN 978 0 580 77051 7
ICS 83.200

Compliance with a British Standard cannot confer immunity from legal obligations.

This British Standard was published under the authority of the Standards Policy and Strategy Committee on 30 June 2014.

Amendments/corrigenda issued since publication

Date	Text affected

Documents
Document Sharing Hub

Full document details: BS EN 289:2014

EUROPEAN STANDARD

NORME EUROPÉENNE

EUROPÄISCHE NORM

EN 289

June 2014

ICS 83.200

Supersedes EN 289:2004+A1:2008

English Version

Plastics and rubber machines - Compression moulding machines and transfer moulding machines - Safety requirements

Machines pour les matières plastiques et le caoutchouc - Machines de moulage par compression et machines de moulage par transfert - Prescriptions de sécurité

Kunststoff- und Gummimaschinen - Formpressen und Spritzpressen - Sicherheitsanforderungen

This European Standard was approved by CEN on 24 April 2014.

CEN members are bound to comply with the CEN/CENELEC Internal Regulations which stipulate the conditions for giving this European Standard the status of a national standard without any alteration. Up-to-date lists and bibliographical references concerning such national standards may be obtained on application to the CEN-CENELEC Management Centre or to any CEN member.

This European Standard exists in three official versions (English, French, German). A version in any other language made by translation under the responsibility of a CEN member into its own language and notified to the CEN-CENELEC Management Centre has the same status as the official versions.

CEN members are the national standards bodies of Austria, Belgium, Bulgaria, Croatia, Cyprus, Czech Republic, Denmark, Estonia, Finland, Former Yugoslav Republic of Macedonia, France, Germany, Greece, Hungary, Iceland, Ireland, Italy, Latvia, Lithuania, Luxembourg, Malta, Netherlands, Norway, Poland, Portugal, Romania, Slovakia, Slovenia, Spain, Sweden, Switzerland, Turkey and United Kingdom.

EUROPEAN COMMITTEE FOR STANDARDIZATION
COMITÉ EUROPÉEN DE NORMALISATION
EUROPÄISCHES KOMITEE FÜR NORMUNG

CEN-CENELEC Management Centre: Avenue Marnix 17, B-1000 Brussels

© 2014 CEN All rights of exploitation in any form and by any means reserved worldwide for CEN national Members.

Ref. No. EN 289:2014 E

Documents
Document Sharing Hub

Full document details: BS EN 289:2014

Contents

Page

Foreword 5

Introduction 6

1 Scope 7

2 Normative references 8

3 Terms and definitions 10

4 List of significant hazards 14
4.1 General 14
4.2 Danger areas on presses 14
4.3 General hazards 16
4.3.1 Mechanical hazards 16
4.3.2 Electrical hazards 16
4.3.3 Thermal hazards 16
4.3.4 Hazards generated by noise 16
4.3.5 Hazards generated by dusts, gases and vapours 16
4.3.6 Slip, trip and fall hazards 16
4.3.7 Hazards due to malfunctioning of the hydraulic system due to contamination of the hydraulic fluid 16
4.3.8 Hazards due to malfunctioning of the electrical part of the control system 16
4.3.9 Hazards due to electromagnetic interference 16
4.3.10 Hazards generated by neglecting ergonomic principles in machine design 17
4.4 Hazards in specific machine areas 17
4.4.1 Mould area 17
4.4.2 Clamping unit area outside the mould area 17
4.5 Hazards associated with power operated mould clamping systems 17
4.5.1 General 17
4.5.2 Specific hazards associated with magnetic clamping systems 17
4.6 Hazards associated with power operated mould changing equipment 18
4.7 Additional hazards associated with specific design 18
4.7.1 Presses where whole body access is possible between the movable guard or the light curtain for the mould area and the mould area itself 18
4.7.2 Presses where whole body access is possible to the mould area 18
4.7.3 Shuttle/turntable machines 18
4.7.4 Carousel machines 18
4.8 Additional hazards when using ancillary equipment 18

5 Safety requirements and/or protective measures 19
5.1 General 19
5.1.1 Basic requirement 19
5.1.2 Setting operations 19
5.1.3 Safety related parts of the control system (SRP/CS) 19
5.1.4 Emergency stop 19
5.2 Basic requirements for safeguards used on presses 20
5.2.1 Guards 20
5.2.2 Light curtains 20
5.2.3 Two-hand control devices 20
5.2.4 Hold-to run control devices 21
5.2.5 Pressure sensitive mats, floors and edges 21
5.3 Safety requirements and/or protective measures to prevent general hazards 21
5.3.1 Mechanical hazards 21
5.3.2 Electrical hazards 22
5.3.3 Thermal hazards 22

AVA Documents
Document Sharing Hub

Full document details: BS EN 289:2014

5.3.4 Hazards generated by noise 22
5.3.5 Hazards generated by dusts, gases and vapours 23
5.3.6 Slip, trip and fall hazards 23
5.3.7 Hazards due to malfunctioning of the hydraulic system due to contamination of the hydraulic fluid 23
5.3.8 Hazards due to malfunctioning of the electrical part of the control system 23
5.3.9 Hazards due to electromagnetic interference 23
5.3.10 Hazards generated by neglecting ergonomic principles 24
5.4 Safety requirements and/or protective measures in specific machine areas 24
5.4.1 Mould area 24
5.4.2 Clamping unit area outside the mould area 29
5.5 Safety requirements and/or protective measures for power operated mould clamping systems 30
5.5.1 General 30
5.5.2 Magnetic clamping systems 30
5.6 Safety requirements and/or protective measures for power operated mould changing equipment 31
5.7 Additional safety requirements and/or protective measures associated with specific design 32
5.7.1 Presses where whole body access is possible between the movable guard or the light curtain for the mould area and the mould area itself 32
5.7.2 Presses where whole body access is possible to the mould area 34
5.7.3 Shuttle/turntable machines 35
5.7.4 Carousel machines 35
5.8 Additional safety requirements and/or protective measures when using ancillary equipment 36

6 Verification of the safety requirements and/or protective measures 37

7 Information for use 39
7.1 General 39
7.2 Instruction handbook 40
7.2.1 General 40
7.2.2 General instructions 40
7.2.3 Emergency stop and rescue procedure 40
7.2.4 Light curtains 40
7.2.5 Stopping distance and stopping time 40
7.2.6 Flexible hose assemblies 40
7.2.7 Noise emission 40
7.2.8 Exhaust ventilation system 41
7.2.9 Maintenance of the hydraulic system 41
7.2.10 Presses equipped with two-hand control devices 41
7.2.11 Additional mechanical restraint device for downstroking presses with two hydraulic restraint devices 41
7.2.12 Movements of cores and ejectors and their drive mechanisms 41
7.2.13 Personal protective equipment against thermal hazards 42
7.2.14 Presence detecting devices in the mould area 42
7.2.15 Key lockable switch 42
7.2.16 Ancillary equipment 42
7.2.17 Mould clamping 42
7.2.18 Magnetic mould clamping 42
7.2.19 Maximum additional mass 43
7.2.20 Setting of carousel machines 43
7.2.21 Machines with upstroking platen 43
7.3 Marking 44
7.4 Warning signs and alarm signals 44

Annex A (normative) Acknowledgement systems 45

A.1 Single acknowledgement system 45

AVA Documents
Document Sharing Hub

Full document details: BS EN 289:2014

A.2 Double acknowledgement system ... 45
Annex B (normative) Noise test code ... 46
B.1 Introduction ... 46
B.2 Measurement of the A-weighted emission sound pressure level at the operator's or other specified positions ... 46
B.3 Determination of the A-weighted sound power level ... 46
B.4 Installation and mounting conditions for noise measurement ... 46
B.5 Operating conditions ... 47
B.6 Information to be recorded and reported ... 47
B.6.1 General ... 47
B.6.2 General data ... 47
B.6.3 Technical data of the press ... 47
B.6.4 Standards ... 48
B.6.5 Mounting and operating conditions ... 48
B.6.6 Acoustic data ... 48
B.7 Declaration and verification of noise emission values ... 48
Annex ZA (informative) Relationship between this European Standard and the Essential Requirements of EU Directive 2006/42/EC ... 49
Bibliography ... 50

Documents
Document Sharing Hub
Full document details: BS EN 289:2014

Foreword

This document (EN 289:2014) has been prepared by Technical Committee CEN/TC 145 “Plastics and rubber machines”, the secretariat of which is held by UNI.

This European Standard shall be given the status of a national standard, either by publication of an identical text or by endorsement, at the latest by December 2014, and conflicting national standards shall be withdrawn at the latest by December 2014.

Attention is drawn to the possibility that some of the elements of this document may be the subject of patent rights. CEN [and/or CENELEC] shall not be held responsible for identifying any or all such patent rights.

This document supersedes EN 289:2004+A1:2008.

This document has been prepared under a mandate given to CEN by the European Commission and the European Free Trade Association, and supports essential requirements of EU Directive.

For relationship with EU Directive, see informative Annex ZA, which is an integral part of this document.

Compared with EN 289:2004+A1:2008, the following significant changes have been made:

a) modification of main element of the title;

b) replacement of safeguard groups I, II and III by more precise specifications of the safeguards in the respective clauses;

c) specification of the safety related parts of control systems with reference to EN ISO 13849-1:2008 instead of specified types I, II and III and EN 954 and deletion of corresponding normative Annexes A, B, C, D, E and H;

d) addition of safety requirements for:

    1) electromagnetic interference;

    2) machines with electrical axes;

    3) platen movements by gravity on upstroking presses;

    4) magnetic clamping systems;

    5) carousel machines;

    6) power operated mould changing equipment;

    7) hazards generated by neglecting ergonomic principles in machine design;

e) deletion of Annex G.

According to the CEN-CENELEC Internal Regulations, the national standards organizations of the following countries are bound to implement this European Standard: Austria, Belgium, Bulgaria, Croatia, Cyprus, Czech Republic, Denmark, Estonia, Finland, Former Yugoslav Republic of Macedonia, France, Germany, Greece, Hungary, Iceland, Ireland, Italy, Latvia, Lithuania, Luxembourg, Malta, Netherlands, Norway, Poland, Portugal, Romania, Slovakia, Slovenia, Spain, Sweden, Switzerland, Turkey and the United Kingdom.

AVA Documents
Document Sharing Hub

Full document details: BS EN 289:2014

Introduction

This document is a type C standard as stated in EN ISO 12100:2010.

The machinery concerned and the extent to which hazards, hazardous situations and events are covered are indicated in the scope of this document.

When provisions of this type C standard are different from those which are stated in type A or B standards, the provisions of this type C standard take precedence over the provisions of the other standards, for machines that have been designed and built according to the provisions of this type C standard.

Documents
Document Sharing Hub
Full document details: BS EN 289:2014

1 Scope

This European Standard specifies the essential safety requirements for compression moulding machines and transfer moulding machines for the moulding of plastics and/or rubber with a closing movement more than 6 mm.

In this document a compression moulding machine or transfer moulding machine as described above is designated by the term “press” (see 3.1).

This document deals with all significant hazards, hazardous situations and events relevant to presses, when they are used as intended and under conditions of misuse which are reasonably foreseeable by the manufacturer (see Clause 4).

The safety requirements are specified for the additional hazards arising from:

— shuttle/turn tables used for loading/unloading and/or cooling,

— magnetic clamping systems.

For other ancillary equipment, as defined in 3.7, that is not part of the press, only the requirements for the interaction between presses and ancillary equipment, especially loading and unloading devices are specified.

The following machines or units are excluded:

— pneumatic presses for plastic and rubber;

— injection moulding machines (see EN 201:2009);

— tyre curing machines (see prEN 16474);

— presses for curing inner tubes and curing bags;

— hydraulic presses for the cold working of metals as covered by EN 693:2001+A2:2011;

— mechanical presses for the cold working of metals as covered by EN 692:2005+A1:2009;

— pneumatic presses for the cold working of metals as covered by EN 13736:2003+A1:2009;

— thermoforming machines (see EN 12409:2008+A1:2011);

— reaction injection moulding (RIM) machines (see EN 1612-1:1997+A1:2008);

— the extruder of the carousel machine(see EN 1114-1:2011).

This standard does not cover:

— hazards caused by the processing of materials which may lead to a risk of explosion, see 7.2.2;

— the requirements of Directive 94/9/CE concerning equipment and protective systems intended for use in potentially explosive atmospheres;

— requirements for the design of exhaust ventilation systems, see 5.3.5 and 7.2.8.

This document is not applicable to presses manufactured before the date of its publication as EN.

Documents
Document Sharing Hub
Full document details: BS EN 289:2014

2 Normative references

The following documents, in whole or in part, are normatively referenced in this document and are indispensable for its application. For dated references, only the edition cited applies. For undated references, the latest edition of the referenced document (including any amendments) applies.

EN 574:1996+A1:2008, *Safety of machinery - Two-hand control devices - Functional aspects - Principles for design*

EN 953:1997+A1:2009, *Safety of machinery - Guards - General requirements for the design and construction of fixed and movable guards*

EN 60204-1:2006, *Safety of machinery — Electrical equipment of machines — Part 1: General requirements (IEC 60204-1:2005, modified)*

EN 60529:1991, *Degrees of protection provided by enclosures (IP Code) (IEC 60529:1989)*

EN 61000-6-2:2005, *Electromagnetic compatibility (EMC) — Part 6-2: Generic standards — Immunity for industrial environments (IEC 61000-6-2:2005)*

EN 61000-6-4:2007, *Electromagnetic compatibility (EMC) — Part 6-4: Generic standards — Emission standard for industrial environments (IEC 61000-6-4:2006)*

EN 61496-1:2004, *Safety of machinery — Electro-sensitive protective equipment — Part 1: General requirements and tests (IEC 61496-1:2004, modified)*

EN 61496-2:2013 *Safety of machinery — Electro-sensitive protective equipment — Part 2: Particular requirements for equipment using active opto-electronic protective devices (AOPDs) (IEC 61496-2:2013)*

CLC/TS 61496-3:2008, *Safety of machinery — Electro-sensitive protective equipment — Part 3: Particular requirements for Active Opto-electronic Protective Devices responsive to Diffuse Reflection (AOPDDR) (IEC 61496-3:2008)*

EN 61800-5-2:2007, *Adjustable speed electrical power drive system — Part 5-2: Safety requirements — Functional (IEC 61800-5-2:2007)*

EN ISO 3744:2010, *Acoustics - Determination of sound power levels and sound energy levels of noise sources using sound pressure - Engineering methods for an essentially free field over a reflecting plane (ISO 3744:2010)*

EN ISO 3746:2010, *Acoustics - Determination of sound power levels and sound energy levels of noise sources using sound pressure - Survey method using an enveloping measurement surface over a reflecting plane (ISO 3746:2010)*

EN ISO 3747:2010, *Acoustics - Determination of sound power levels and sound energy levels of noise sources using sound pressure - Engineering/survey methods for use in situ in a reverberant environment (ISO 3747:2010)*

EN ISO 4413:2010, *Hydraulic fluid power - General rules and safety requirements for systems and their components (ISO 4413:2010)*

EN ISO 4414:2010, *Pneumatic fluid power - General rules and safety requirements for systems and their components (ISO 4414:2010)*

EN ISO 4871:2009, *Acoustics - Declaration and verification of noise emission values of machinery and equipment (ISO 4871:1996)*

Documents
Document Sharing Hub
Full document details: BS EN 289:2014

EN ISO 9614-1:2009, *Acoustics - Determination of sound power levels of noise sources using sound intensity - Part 1: Measurement at discrete points (ISO 9614-1:1993)*

EN ISO 9614-2:1996, *Acoustics - Determination of sound power levels of noise sources using sound intensity - Part 2: Measurement by scanning (ISO 9614-2:1996)*

EN ISO 11201:2010, *Acoustics - Noise emitted by machinery and equipment - Determination of emission sound pressure levels at a work station and at other specified positions in an essentially free field over a reflecting plane with negligible environmental corrections (ISO 11201:2010)*

EN ISO 11202:2010, *Acoustics - Noise emitted by machinery and equipment - Determination of emission sound pressure levels at a work station and at other specified positions applying approximate environmental corrections (ISO 11202:2010)*

EN ISO 11204:2010, *Acoustics - Noise emitted by machinery and equipment - Determination of emission sound pressure levels at a work station and at other specified positions applying accurate environmental corrections (ISO 11204:2010)*

EN ISO 12100:2010, *Safety of machinery - General principles for design - Risk assessment and risk reduction (ISO 12100:2010)*

EN ISO 13732-1:2008, *Ergonomics of the thermal environment - Methods for the assessment of human responses to contact with surfaces - Part 1: Hot surfaces (ISO 13732-1:2006)*

EN ISO 13849-1:2008, *Safety of machinery - Safety-related parts of control systems - Part 1: General principles for design (ISO 13849-1:2006)*

EN ISO 13850:2008, *Safety of machinery - Emergency stop - Principles for design (ISO 13850:2006)*

EN ISO 13855:2010, *Safety of machinery - Positioning of safeguards with respect to the approach speeds of parts of the human body (ISO 13855:2010)*

EN ISO 13856-1:2013, *Safety of machinery - Pressure-sensitive protective devices - Part 1: General principles for design and testing of pressure-sensitive mats and pressure-sensitive floors (ISO 13856-1:2013)*

EN ISO 13856-2:2013, *Safety of machinery - Pressure-sensitive protective devices - Part 2: General principles for design and testing of pressure-sensitive edges and pressure-sensitive bars (ISO 13856-2:2013)*

EN ISO 13857:2008, *Safety of machinery - Safety distances to prevent hazard zones being reached by upper and lower limbs (ISO 13857:2008)*

EN ISO 14122-1:2001, *Safety of machinery - Permanent means of access to machinery - Part 1: Choice of fixed means of access between two levels (ISO 14122-1:2001)*

EN ISO 14122-2:2001, *Safety of machinery - Permanent means of access to machinery - Part 2: Working platforms and walkways (ISO 14122-2:2001)*

Documents
Document Sharing Hub
Full document details: BS EN 289:2014

EN ISO 14122-3:2001, *Safety of machinery - Permanent means of access to machinery - Part 3: Stairs, stepladders and guard-rails (ISO 14122-3:2001)*

EN ISO 14122-4:2004, *Safety of machinery - Permanent means of access to machinery - Part 4: Fixed ladders (ISO 14122-4:2004)*

3 Terms and definitions

For the purposes of this document, the terms and definitions given in EN ISO 12100:2010 and the following apply.

3.1
press
machine for the discontinuous production of moulded parts from plastics or rubber compounds which essentially consists of one or more clamping units, drive and control systems and possibly ancillary equipment (see 3.7)

3.1.1
compression moulding
process in which the moulding material is placed into the open mould

Note 1 to entry: When the press is closed, the moulding process is carried out under the influence of pressure with or without heat.

Note 2 to entry: See Figures 1 and 2.

Note 3 to entry: This process may be used as well for laminating sheets or plates.

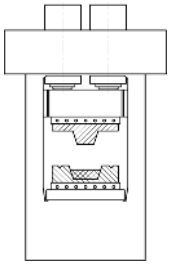

Figure 1 — Compression moulding machine shown with mould open and loaded with moulding material

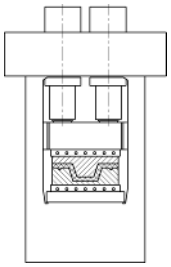

Figure 2 — Compression moulding machine shown with mould closed and moulding material formed into shape

3.1.2
transfer moulding
process in which the moulding material is fed into a separate cavity (transfer cavity) in the mould and is pressed into the moulding cavity by the pressure of the transfer plunger

Note 1 to entry: The movement of the transfer plunger is obtained either directly by the closing movement of the mould (see Figures 3 and 4) or via a separate cylinder (see Figures 5 and 6).

Documents
Document Sharing Hub
Full document details: BS EN 289:2014

Note 2 to entry: If the moulding material is injected into the closed mould through a nozzle, see EN 201.

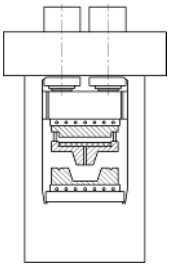

Figure 3 — Transfer moulding machine shown with moulding material in transfer cavity

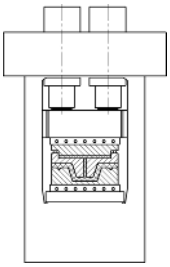

Figure 4 — Transfer moulding machine shown with moulding material fed into the moulding cavity

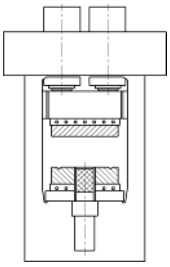

Figure 5 — Transfer moulding machine shown with separate cylinder and with moulding material in transfer cavity

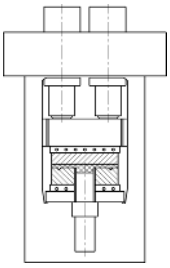

Figure 6 — Transfer moulding machine shown with separate cylinder and with moulding material fed into the moulding cavity

Documents
Document Sharing Hub
Full document details: BS EN 289:2014

3.2
mould area
area between the platens

3.3
clamping unit
part of the press comprising fixed and mobile platens and associated drive mechanism

3.4
magnetic clamping system
clamping system utilising magnetic force to attach the mould to the platens

3.5
shuttle/turntable machine
press designed to contain one or more moulds attached to a table that indexes the mould(s) by a sliding or rotary motion between the loading/unloading station and the moulding position

3.6
carousel machine
machine composed by several compression units mounted on a rotating structure (carousel) fed by an extruder (see Figure 7)

Note 1 to entry: For the extruder see EN 1114–1.

Documents
Document Sharing Hub
Full document details: BS EN 289:2014

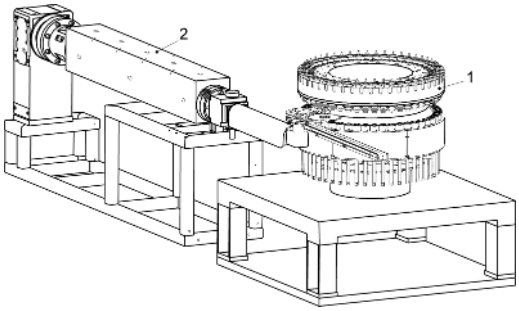

a)

Key

1 Carousel

2 Extruder

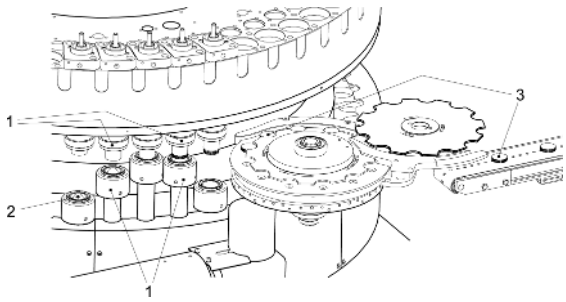

b)

Key

1 Moulds

2 Dose

3 Product

Figure 7 — Example of the main danger area on a carousel machine

3.7
ancillary equipment
equipment which interacts with the press, e.g. loading and unloading devices (including heating stations, sliding tables, robots, plasticizing units)

3.8
electrical axis
system consisting of an electrical motor, a motor control unit and any additional contactors

3.9
electrical motor
type of motor using electrical energy, e.g. servo or linear motor

3.10
motor control unit
unit to control the movement, stopping process and standstill of an electrical motor, with or without an integrated electronic device, e.g. frequency converter, contactor

Documents
Document Sharing Hub
Full document details: BS EN 289:2014

3.11
gravity-loaded axis
axis which may carry out unintended hazardous movements as a result of failure effects due to gravity or stored energy

EXAMPLES Vertical axes, inclined axes, rotational axes with eccentric centre of gravity.

4 List of significant hazards

4.1 General

This clause lists all the significant hazards associated with presses, except those excluded in the scope. This document differentiates between:

— general hazards;

— hazards in specific machine areas;

— hazards associated with power operated mould clamping systems;

— additional hazards associated with specific design;

— additional hazards when using ancillary equipment.

NOTE The numbering system of the significant hazards in 4.3 to 4.8 corresponds with the numbering system of the safety requirements and/or measures in 5.3 to 5.8.

4.2 Danger areas on presses

The principal danger areas are shown in Figures 8, 9 and 10.

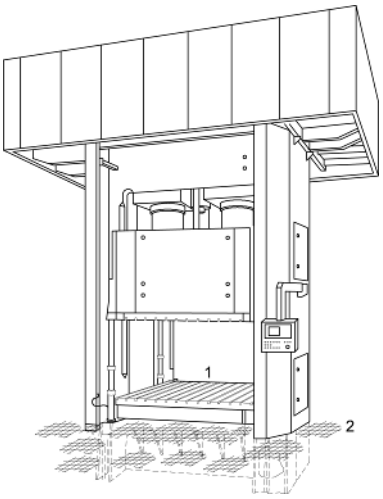

Key
1 Mould area
2 Floor level

Figure 8 — Example of the mould area on a large frame construction downstroking press, shown without mould and with electro-sensitive protective equipment

Documents
Document Sharing Hub
Full document details: BS EN 289:2014

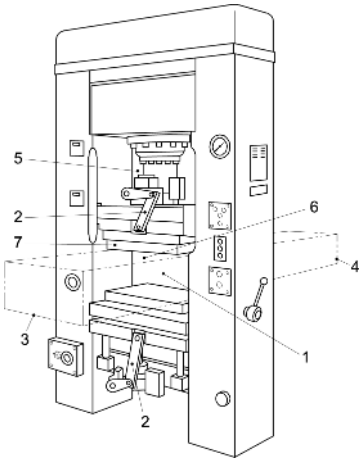

Key

1 Mould area
2 Ejector mechanism
3 Loading device
4 Unloading device
5 Above mobile platen
6 Cores
7 Hot mould and platens

Figure 9 — Examples of danger areas on a frame construction downstroking press, shown with mould and without protective devices

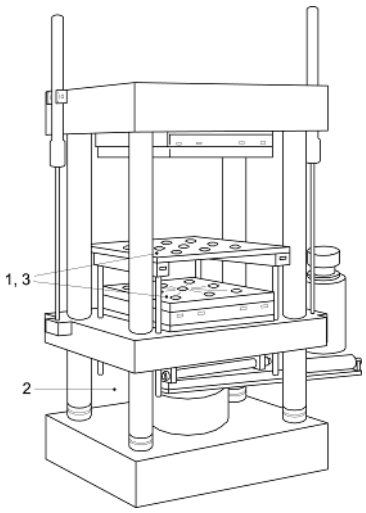

Key

1 Mould area
2 Under mobile platen
3 Hot moulds and platens

Figure 10 — Examples of danger areas on a column construction upstroking press (also applicable to multi-daylight presses), shown without protective devices

Documents
Document Sharing Hub
Full document details: BS EN 289:2014