BS EN 2997-001:2017
Incorporating corrigendum June 2017

BSI Standards Publication

Aerospace series - Connectors, electrical, circular, coupled by threaded ring, fire-resistant or non fire-resistant, operating temperatures - 65 °C to 175 °C continuous, 200 °C continuous, 260 °C peak

Part 001: Technical specification

Documents
Document Sharing Hub

Full document details: BS EN 2997-001:2017

National foreword

This British Standard is the UK implementation of EN 2997-001:2017. It supersedes BS EN 2997-001:2011, which is withdrawn.

The UK participation in its preparation was entrusted to Technical Committee CH/150/2, Cardiovascular implants.

A list of organizations represented on this committee can be obtained on request to its secretary.

This publication does not purport to include all the necessary provisions of a contract. Users are responsible for its correct application.

© The British Standards Institution 2018
Published by BSI Standards Limited 2018

ISBN 978 0 539 00875 3

ICS 49.060

Compliance with a British Standard cannot confer immunity from legal obligations.

This British Standard was published under the authority of the Standards Policy and Strategy Committee on 31 July 2017.

Amendments/corrigenda issued since publication

Date	Text affected
31 May 2018	Implementation of CEN correction notice 21 June 2017: Table 10, Details column: Figure and Table cross references for EN 2591-413, and Figure cross references for EN 2591-419 changed

Documents
Document Sharing Hub

Full document details: BS EN 2997-001:2017

EUROPEAN STANDARD

NORME EUROPÉENNE

EUROPÄISCHE NORM

EN 2997-001

June 2017

ICS 49.060

Supersedes EN 2997-001:2011

English Version

Aerospace series - Connectors, electrical, circular, coupled by threaded ring, fire-resistant or non fire-resistant, operating temperatures - 65 °C to 175 °C continuous, 200 °C continuous, 260 °C peak - Part 001: Technical specification

Série aérospatiale - Connecteurs électriques circulaires à accouplement par bague filetée, résistant au feu ou non, températures d'utilisation - 65 °C à 175 °C continu, 200 °C continu, 260 °C en pointe - Partie 001: Spécification technique

Luft- und Raumfahrt - Elektrische Rundsteckverbinder mit Schraubkupplung, feuerbeständig oder nicht feuerbeständig, Betriebstemperaturen - 65 °C bis 175 °C konstant, 200 °C konstant, 260 °C Spitze - Teil 001: Technische Lieferbedingungen

This European Standard was approved by CEN on 6 February 2017.

CEN members are bound to comply with the CEN/CENELEC Internal Regulations which stipulate the conditions for giving this European Standard the status of a national standard without any alteration. Up-to-date lists and bibliographical references concerning such national standards may be obtained on application to the CEN-CENELEC Management Centre or to any CEN member.

This European Standard exists in three official versions (English, French, German). A version in any other language made by translation under the responsibility of a CEN member into its own language and notified to the CEN-CENELEC Management Centre has the same status as the official versions.

CEN members are the national standards bodies of Austria, Belgium, Bulgaria, Croatia, Cyprus, Czech Republic, Denmark, Estonia, Finland, Former Yugoslav Republic of Macedonia, France, Germany, Greece, Hungary, Iceland, Ireland, Italy, Latvia, Lithuania, Luxembourg, Malta, Netherlands, Norway, Poland, Portugal, Romania, Serbia, Slovakia, Slovenia, Spain, Sweden, Switzerland, Turkey and United Kingdom.

EUROPEAN COMMITTEE FOR STANDARDIZATION
COMITÉ EUROPÉEN DE NORMALISATION
EUROPÄISCHES KOMITEE FÜR NORMUNG

CEN-CENELEC Management Centre: Avenue Marnix 17, B-1000 Brussels

© 2017 CEN All rights of exploitation in any form and by any means reserved worldwide for CEN national Members.

Ref. No. EN 2997-001:2017 E

Documents
Document Sharing Hub

Full document details: BS EN 2997-001:2017

Contents

Page

European foreword 3
Introduction 4
1 Scope 5
2 Normative references 5
3 Terms and definitions 6
4 Description 6
5 Design 8
6 Definition drawings and masses 9
7 Tests 44
8 Quality assurance 59
9 Designation and marking 70
10 Delivery conditions 71
11 Packaging 71
12 Storage 72

Documents
Document Sharing Hub
Full document details: BS EN 2997-001:2017

European foreword

This document (EN 2997-001:2017) has been prepared by the Aerospace and Defence Industries Association of Europe - Standardization (ASD-STAN).

After enquiries and votes carried out in accordance with the rules of this Association, this Standard has received the approval of the National Associations and the Official Services of the member countries of ASD, prior to its presentation to CEN.

This European Standard shall be given the status of a national standard, either by publication of an identical text or by endorsement, at the latest by December 2017, and conflicting national standards shall be withdrawn at the latest by December 2017.

Attention is drawn to the possibility that some of the elements of this document may be the subject of patent rights. CEN [and/or CENELEC] shall not be held responsible for identifying any or all such patent rights.

This document supersedes EN 2997-001:2011.

According to the CEN-CENELEC Internal Regulations, the national standards organizations of the following countries are bound to implement this European Standard: Austria, Belgium, Bulgaria, Croatia, Cyprus, Czech Republic, Denmark, Estonia, Finland, Former Yugoslav Republic of Macedonia, France, Germany, Greece, Hungary, Iceland, Ireland, Italy, Latvia, Lithuania, Luxembourg, Malta, Netherlands, Norway, Poland, Portugal, Romania, Serbia, Slovakia, Slovenia, Spain, Sweden, Switzerland, Turkey and the United Kingdom.

AVA Documents
Document Sharing Hub

Full document details: BS EN 2997-001:2017

Introduction

This family of connectors is derived from MIL-DTL-83723 series III, type T which it is intermateable with.

It is particularly suitable for use on aircraft engines and in zones of severe environmental conditions on board aircraft, applying EN 2282.

These connectors are distinguishable from MIL-DTL-83723 by:

a) the mechanical stop for coupling being achieved manually;

b) the coupling system having a self-locking nut that features a greater resistance to decoupling;

c) the variety of the functional classes and models, including models with integrated cable outlets.

Documents
Document Sharing Hub

Full document details: BS EN 2997-001:2017

1 Scope

This European Standard specifies the general characteristics, the conditions for qualification acceptance and quality assurance, and the test programs and groups for threaded ring coupling circular connectors, fire resistant or non-fire resistant, intended for use in a temperature range from – 65 °C to 175 °C continuous, 200 °C continuous or 260 °C peak according to the classes and models.

2 Normative references

The following documents, in whole or in part, are normatively referenced in this document and are indispensable for its application. For dated references, only the edition cited applies. For undated references, the latest edition of the referenced document (including any amendments) applies.

EN 2267-002, *Aerospace series — Cables, electrical, for general purpose — Operating temperatures between – 55 °C and 260 °C — Part 002: General*

EN 2282, *Aerospace series — Characteristics of aircraft electrical supplies*

EN 2346-002, *Aerospace series — Cable, electrical, fire resistant — Operating temperatures between – 65 °C and 260 °C — Part 002: General*

EN 2591 (all parts), *Aerospace series — Elements of electrical and optical connection — Test methods*

EN 2997 (all parts), *Aerospace series — Connectors, electrical, circular, coupled by threaded ring, fire-resistant or non-fire resistant, operating temperatures – 65 °C to 175 °C continuous, 200 °C continuous, 260 °C peak*

EN 3155-001, *Aerospace series — Electrical contacts used in elements of connection — Part 001: Technical specification*

EN 3197, *Aerospace series — Design and installation of aircraft electrical and optical interconnection systems*

EN 3660-003, *Aerospace series — Cable outlet accessories for circular and rectangular electrical and optical connectors — Part 003: Grommet nut, style A for EN 2997 and EN 4067 — Product standard*

EN 3660-004, *Aerospace series — Cable outlet accessories for circular and rectangular electrical and optical connectors — Part 004: Cable outlet, style A, straight, unsealed with clamp strain relief for EN 2997 and EN 4067 — Product standard*

EN 3660-033, *Aerospace series — Cable outlet accessories for circular and rectangular electrical and optical connectors — Part 033: Band — Product standard* [1)]

EN 3909, *Aerospace series — Test fluids for electrical and optical components and sub-assemblies*

1) In preparation at the date of publication of this standard.

Documents
Document Sharing Hub
Full document details: BS EN 2997-001:2017

EN 4067 (all parts), *Aerospace series — Connectors, electrical, circular, scoop-proof, coupled by threaded ring, fire-resistant, operating temperature 260 °C peak*

EN 4529-003, *Aerospace series — Elements of electrical and optical connection — Sealing plugs — Part 003: Class T — Product standard*

EN 9133, *Aerospace series — Quality management systems — Qualification procedure for aerospace standard parts*

ISO 263, *ISO Inch screw threads — General plan and selection for screws, bolts and nuts — Diameter range 0,06 to 6 in*

MIL-HDBK-454B, *General guidelines for electronic equipment* [2)]

MIL-DTL-83723, *Connector, electrical circular, environment resistant, receptacles and plugs, general specification for* [2)]

3 Terms and definitions

For the purposes of this document, the terms and definitions given in EN 2591-100 apply.

4 Description

4.1 General

Different variants of materials, housings and contact arrangements are provided according to the model and class.

These connectors use crimp or solder contacts of sizes 22, 20, 16 and 12.

The receptacles and plugs contain either male contacts or female contacts.

The contacts fitted in the classes Y and YE receptacles are exclusively of the male non-removable solder type.

The connectors are polarized by means of keyways and keys; polarization shall be obtained before the male contacts enter the insert of the female contacts and before the coupling ring is engaged. The position of the keying arrangement is given in Table 5. Masking of the blue colour band on the receptacle provides visual indication of full coupling.

Only the connectors housing sizes 8, 10 and 12 with size 22 contacts are mechanical scoop proof.

2) Published by: Defense Logistic Agency (DLA), http://www.dscc.dla.mil/Programs/MilSpec/

Documents
Document Sharing Hub
Full document details: BS EN 2997-001:2017

4.2 Receptacle

The receptacle may be attached by:

- square flange;
- the jam-nut with O-ring sealing; for spare parts, see EN 2997-002;
- round flange for attachment by soldering/brazing/welding, classes Y and YE only.

The receptacle contains five keyways into which the keys of the plug engage. The main keyway is fixed and is wider than the others. Polarization is ensured by different positions of the secondary keyways. The position of the insert is fixed relative to the main keyway.

4.3 Plug

The plug contains five keys, which engage in the keyways of the receptacle. The main key is wider than the others. Polarization is ensured by different positions of the secondary keys. The position of the insert is fixed relative to the main key.

The coupling ring permanently fitted on the plug enables the connectors to be coupled and uncoupled. The coupling torque shall be at least 50 % lower than the uncoupling torque. The internal thread of the coupling ring may be treated during manufacture with a suitable lubricant compatible with the performance required in this standard.

The plug of classes S, SE, SF, SV, RS and WS is fitted with a grounding spring device ensuring electrical continuity between the coupled connector housings.

4.4 Materials and surface treatment

4.4.1 General

When dissimilar metals are in close contact, adequate protection against corrosion shall be used for the electromotive force of the cell not to exceed 0,25 V (see EN 3197).

4.4.2 Housings

The material of the housing for the connectors and for the fittings may either be passivated stainless steel or aluminium alloy protected against corrosion by nickel or cadmium plating (see EN 2997-002).

4.4.3 Contacts

Unless otherwise specified, the contacts shall be in ferrous alloy for classes Y and YE and in copper alloy for the other models.

The contacts for classes Y and YE shall be gold-plated on an appropriate undercoat (silver undercoat shall not be used). Selective protection is authorized provided that it is sufficient to ensure that performance is not affected.

Measurement of the thickness of the protective treatment shall be effected in accordance with EN 2591-508.

For removable contacts, see EN 2997-002.

AVA Documents
Document Sharing Hub

Full document details: BS EN 2997-001:2017

4.4.4 Non-metallic materials

The materials used for insert, seals and grommets shall have hardness and mechanical and electrical characteristics consistent with the required use.

5 Design

5.1 Housings

The connector housings shall be in one unit. They shall contain teeth at the rear over the entire periphery and shall accommodate the cable outlet accessory and other fittings except for connectors with integrated cable outlet. The receptacle shall furthermore be fitted with an O-ring seal for sealing the coupled housings.

Receptacles for attachment by nut shall contain an O-ring seal. The nut shall have holes for the passage of locking wire.

The threads shall conform to ISO 263.

The coupling ring shall be designed so that the male and female contacts engage when it is rotated clockwise and disengage when it is rotated anti clockwise. The coupling ring shall be knurled to aid gripping by hand.

On completion of tightening of the coupling ring, mechanical metal to metal contact shall exist between the receptacle and the plug mating faces, indicated by masking of the blue colour band (see Figure 1).

The cable outlet accessories shall compress the grommet of the connectors without twisting it.

A blue colour band indicating that the crimp contacts of the connectors are intended for rear removal shall be provided:

- behind the flange of the receptacles with square flange;
- on the flange of receptacles with jam nut attachment;
- on the coupling ring of the plugs.

The position of the blue colour bands shall be such that at least one of them is visible at all times on the coupling ring of the plug.

5.2 Inserts

The insert carrying the male and female contacts shall be in hard material and have a cross section and radii such that no cracks, flaking or breaks can occur in normal operation.

The insert for contacts shall be non-removable; it shall be mechanically held in the housing. Sealing shall be provided between the housing and insert.

The front face of the insert shall be such that sealing is ensured when the connectors are coupled. The interfacial seal of the insert of the male contacts shall be bonded on the hard insert.

The grommet shall permit sealing for all cable diameters indicated in EN 2997-002 and shall not be removable.

Documents
Document Sharing Hub
Full document details: BS EN 2997-001:2017

The mechanical contacts retention system shall be integrated in the hard insert.

The design of non-hermetic connectors shall permit individual installation of the contacts without removal of the insert or grommet. Insertion and removal of the contacts shall be from the rear with the tools specified in the product standards.

6 Definition drawings and masses

6.1 General

The general dimensions and the masses of receptacles, plugs and protective covers are given in the product standards.

6.2 Receptacle mating dimensions

The mating dimensions of receptacles are shown in Figures 1 and 2 including details A, B, C and D as well as in Tables 1 and 2.

Documents
Document Sharing Hub
Full document details: BS EN 2997-001:2017

Dimensions and tolerances are in millimetres.

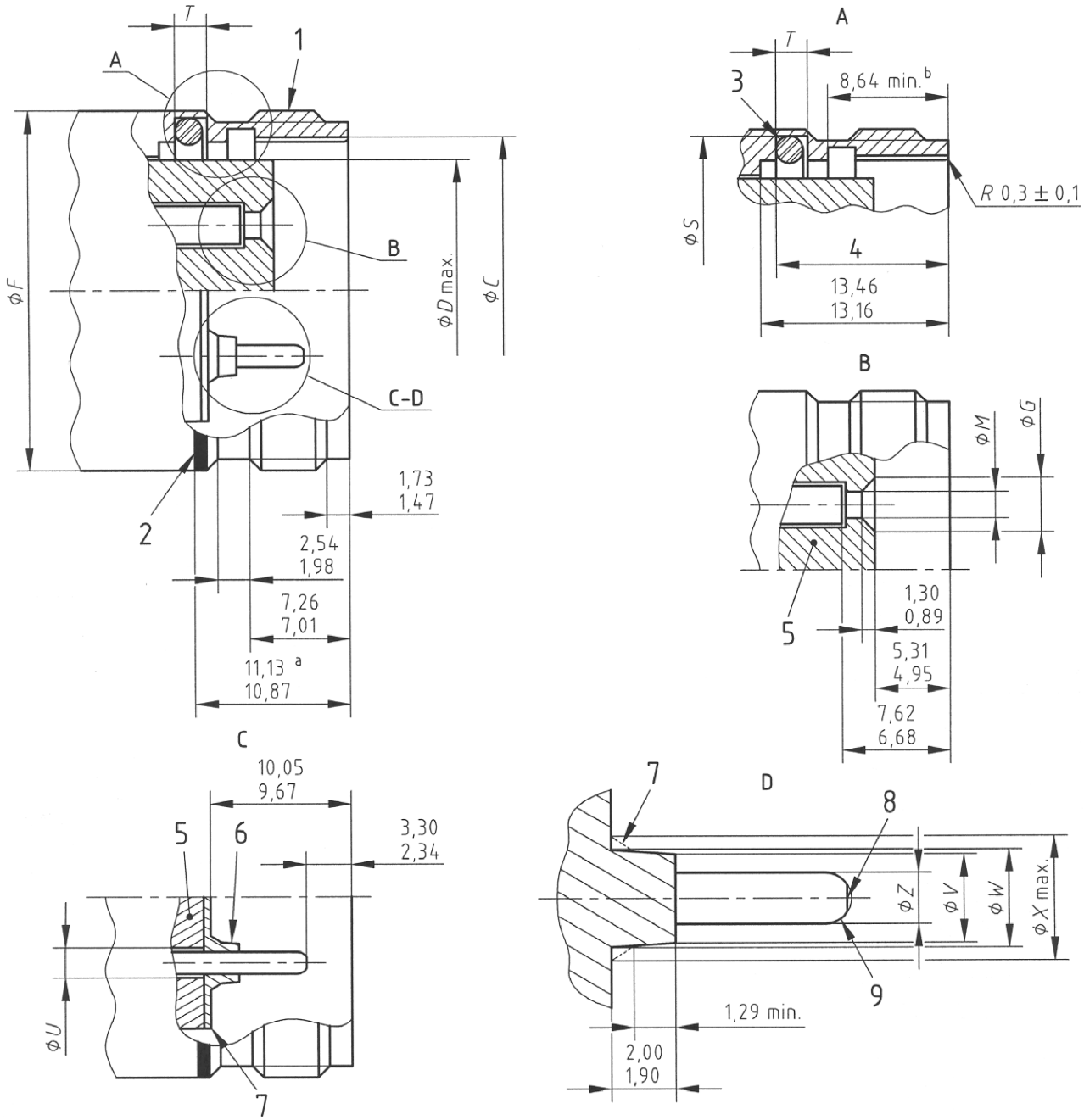

Key

1 Thread

2 Blue coloured band minimum width 0,64

3 Seal diameter housing size 08 : 1,42 ± 0,08
housing sizes 10 to 28 : 1,78 ± 0,08

4 Housing 08: 12,37 / 12,12
Other housings: 12,57 / 12,32

5 Hard insert

6 Interfacial seal

7 Optional shape

8 Flat ∅*N*

9 Blend radius

a To rear of colour band

b Depth of keyways

Figure 1

Documents
Document Sharing Hub
Full document details: BS EN 2997-001:2017

Dimensions and tolerances are in millimetres.

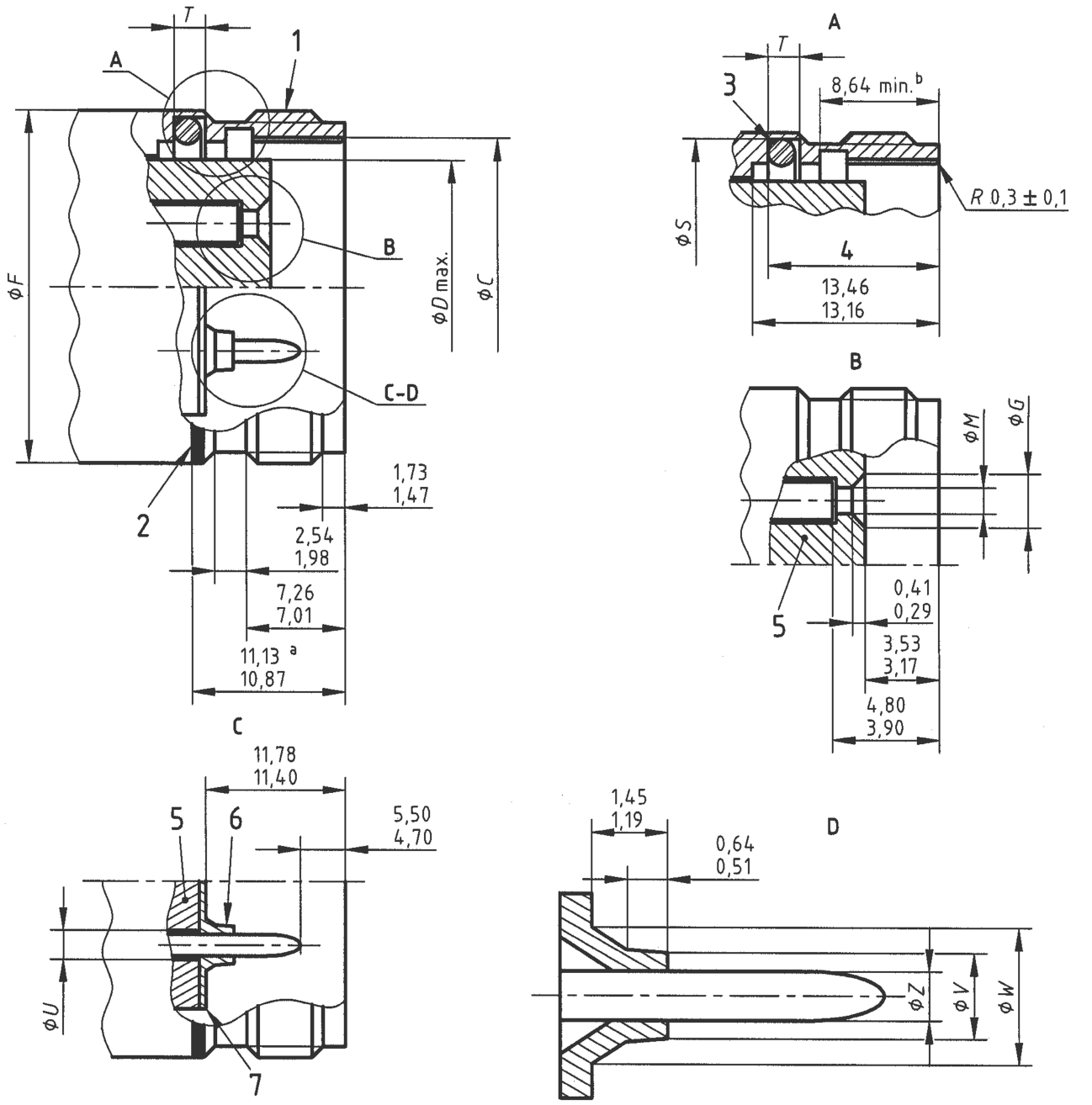

Key

1 Thread

2 Blue coloured band minimum width 0,64

3 Seal diameter housing size 08 : 1,42 ± 0,08
housing sizes 10 to 12 : 1,78 ± 0,08

4 Housing 08: 12,37 / 12,12
Housings 10 and 12: 12,57 / 12,32

5 Hard insert

6 Interfacial seal

7 Optional shape

a To rear of colour band

b Depth of keyways

Figure 2 — Only for housings 8, 10 and 12 for size 22 contact

AVA Documents
Document Sharing Hub

Full document details: BS EN 2997-001:2017

Table 1 — Mating dimensions for receptacle

Housing size	Thread Class 2A [a]	*ØC*	*ØD* max.	*ØS*	*T*	*ØF* max.
08	0.5625 - 24 UNEF	10,62 10,49	7,37	12,58 12,45	1,93 1,80	14,27
10	0.6875 - 24 UNEF	13,59 13,46	10,37	16,28 16,15	2,26 2,13	17,67
12	0.8750 - 20 UNEF	17,91 17,78	14,69	20,60 20,47		22,22
14	0.9375 - 20 UNEF	19,66 19,53	16,44	22,35 22,22		23,77
16	1.0625 - 18 UNEF	22,89 22,76	19,67	25,58 25,45		26,97
18	1.1875 - 18 UNEF	25,58 25,45	22,36	28,27 28,14		30,15
20	1.3125 - 18 UNEF	28,75 28,63	25,54	31,45 31,32		33,32
22	1.4375 - 18 UNEF	31,93 31,80	28,71	34,62 34,49		36,49
24	1.5625 - 18 UNEF	35,10 34,98	31,88	37,80 37,67		39,67
28	1.8125 - 16 UN	41,45 41,32	38,23	44,15 44,02		46,02

[a] ISO 263.

Table 2 — Mating dimensions for receptacle

Contact size	*ØG* [a]	*ØM*	*ØU* [b]	*ØV*	*ØW*	*ØX* [a] max.	*ØZ*	*ØN*
22	1,70 1,60	0,97 0,89	0,94 0,84	1,35 1,27	1,88 1,75	–	0,79 0,76	–
20	3,00 2,90	1,50 1,24	1,17 1,07	2,28 2,14	2,38 2,28	3,00	1,04 0,99	0,51 0,13
16	3,81 3,71	2,06 1,80	1,75 1,65	2,88 2,73	2,98 2,88	3,81	1,61 1,56	0,81 0,43
12	5,33 5,22	2,84 2,54	2,57 2,46	3,85 3,68	3,95 3,85	5,33	2,41 2,36	1,57 1,19

[a] For contact arrangements 08-03 and 10-06, $G = \begin{matrix} 2{,}44 \\ 2{,}34 \end{matrix}$, X max. = 2,44.

[b] Dimension U does not apply to hermetic receptacles.

Documents
Document Sharing Hub
Full document details: BS EN 2997-001:2017

6.3 Plug mating dimensions

The mating dimensions of plugs are shown in Figures 3 and 4 including details A, B, C, and detail D of Figure 1 and in Tables 2 and 3.

Dimensions and tolerances are in millimetres.

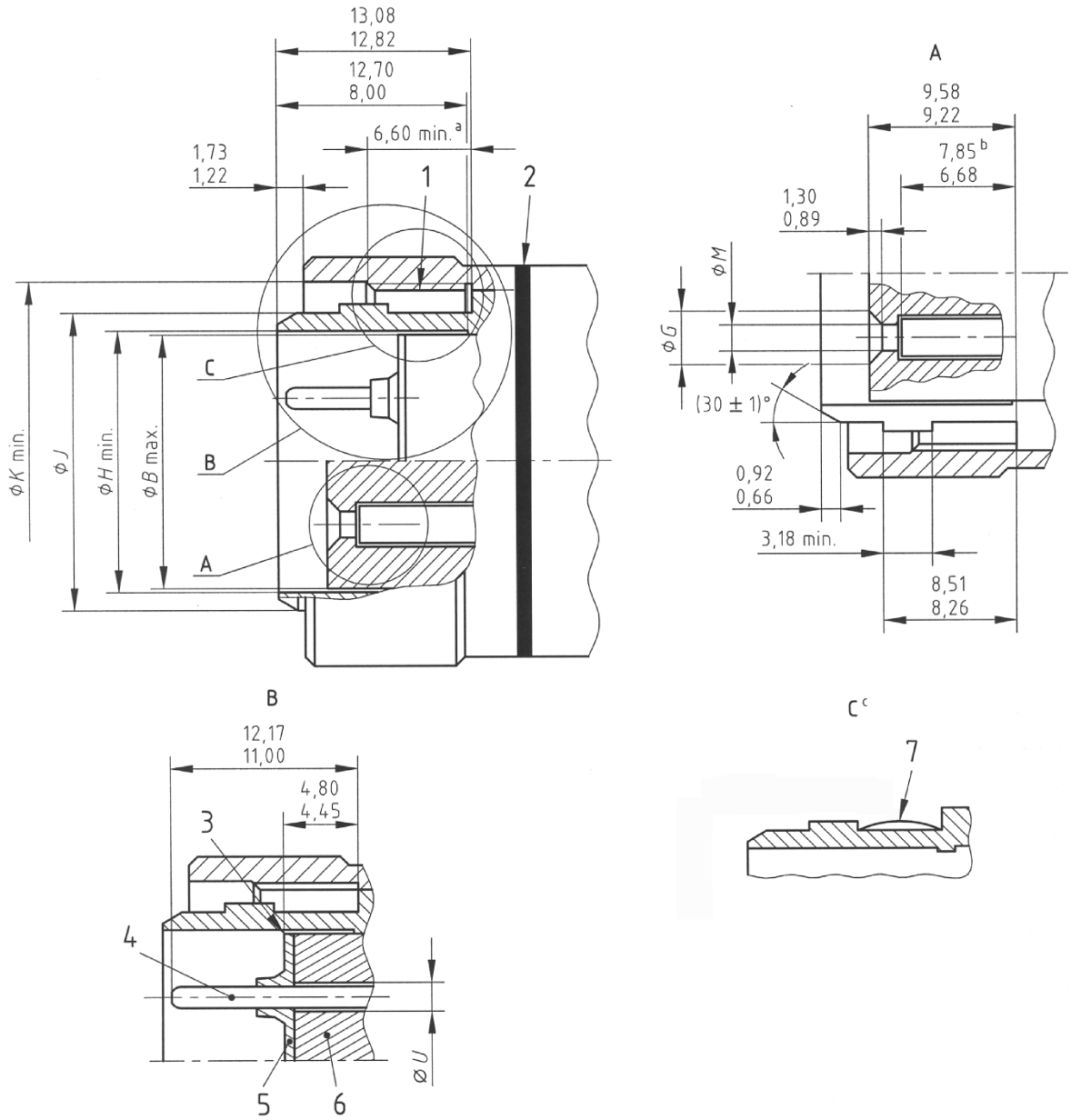

Key

1 Thread
2 Blue colour band minimum width 0,64 position optional
3 Optional shape
4 See detail D in Figure 1
5 Interfacial seal
6 Hard insert
7 Grounding spring system
a Thread engagement
b Front of the contact
c Classes S, SE, SF, SV, RS and WS

Figure 3

Documents
Document Sharing Hub
Full document details: BS EN 2997-001:2017

Dimensions and tolerances are in millimetres.

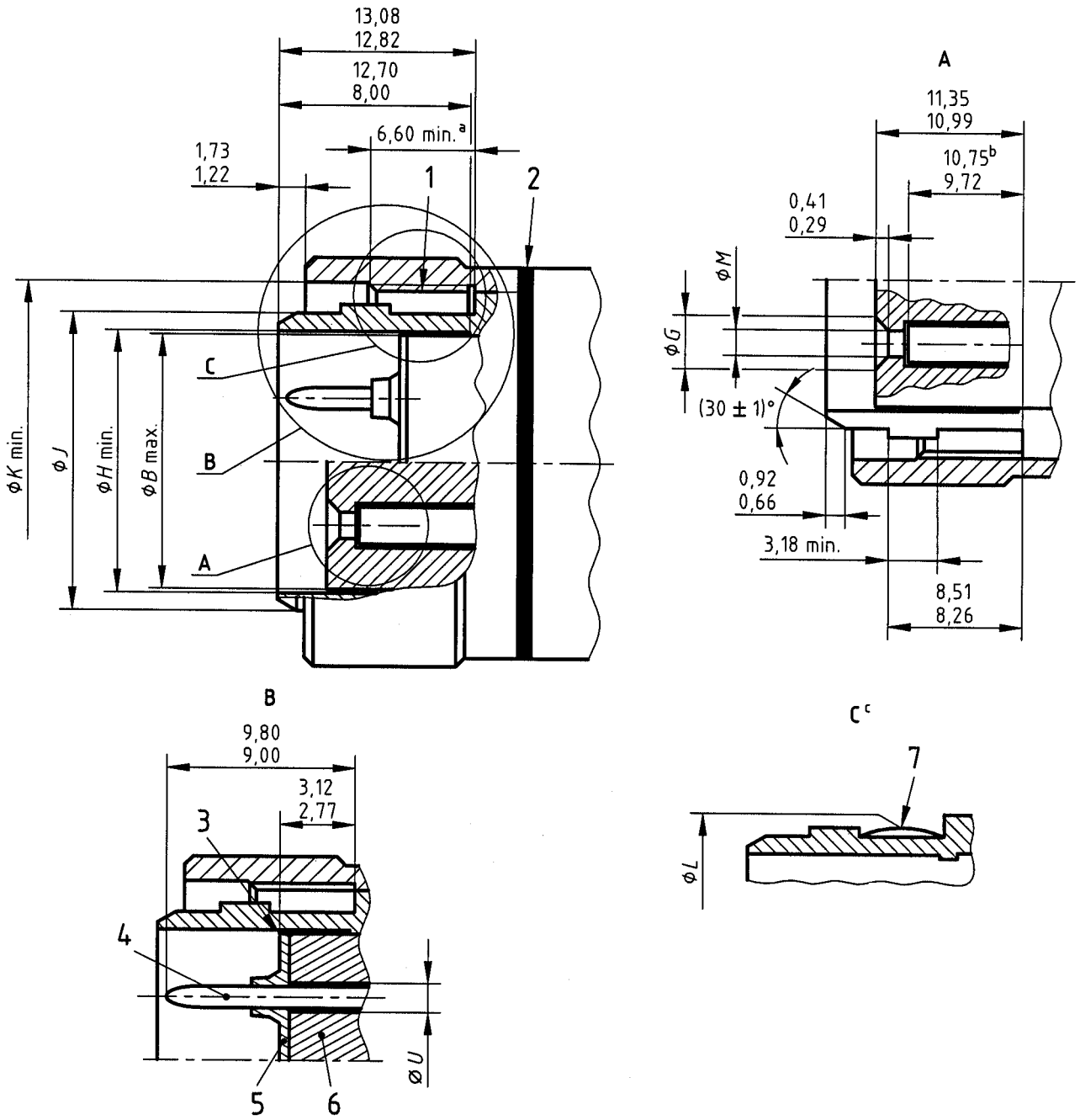

Key

1 Thread
2 Blue colour band minimum width 0,64 position optional
3 Optional shape
4 See detail D in Figure 2
5 Interfacial seal
6 Hard insert
7 Grounding spring system
a Thread engagement
b Front of the contact
c Classes S, SE, SF, SV, RS and WS

Figure 4 — Only for housings 8, 10 and 12 for size 22 contact

Documents
Document Sharing Hub
Full document details: BS EN 2997-001:2017

Table 3 — Mating dimensions for plugs

Housing size	Thread Class 2B [a]	*ØB* max.	*ØH* min.	*ØJ*	*ØK* min.
08	0.5625 - 24 UNEF	7,37	7,47	10,29 10,16	14,61
10	0.6875 - 24 UNEF	10,37	10,87	13,36 13,23	17,96
12	0.8750 - 20 UNEF	14,69	15,19	17,68 17,55	22,73
14	0.9375 - 20 UNEF	16,44	16,94	19,43 19,30	24,31
16	1.0625 - 18 UNEF	19,67	20,17	22,66 22,53	27,53
18	1.1875 - 18 UNEF	22,36	22,86	25,35 25,22	30,71
20	1.3125 - 18 UNEF	25,54	26,04	28,52 28,40	33,88
22	1.4375 - 18 UNEF	28,71	29,21	31,70 31,57	37,06
24	1.5625 - 18 UNEF	31,88	32,38	34,87 34,75	40,23
28	1.8125 - 16 UN	38,23	38,73	41,22 41,09	46,58

[a] ISO 263.

6.4 Receptacle and plug polarization

See Figure 5 and Tables 4 and 5.

AVA Documents
Document Sharing Hub

Full document details: BS EN 2997-001:2017

Dimensions and tolerances are in millimetres.

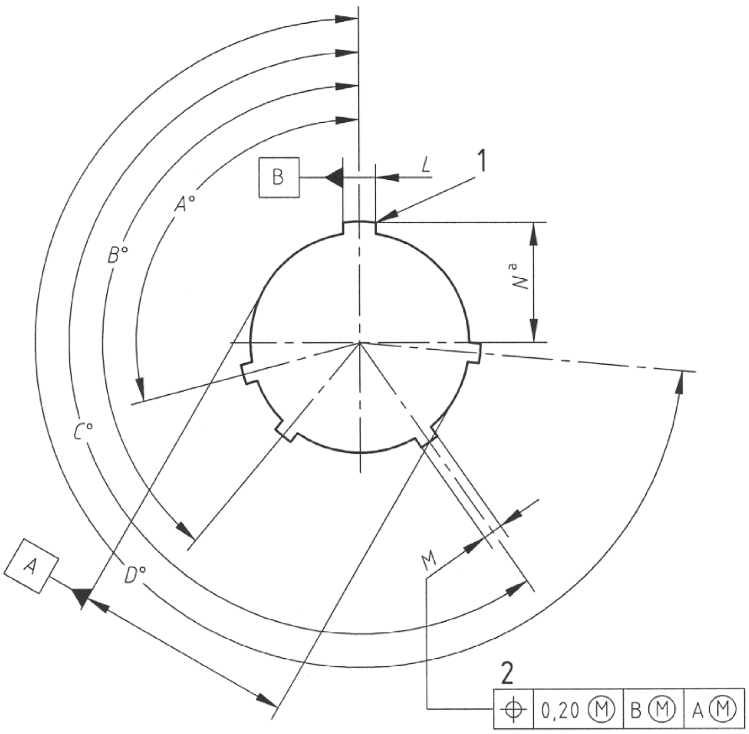

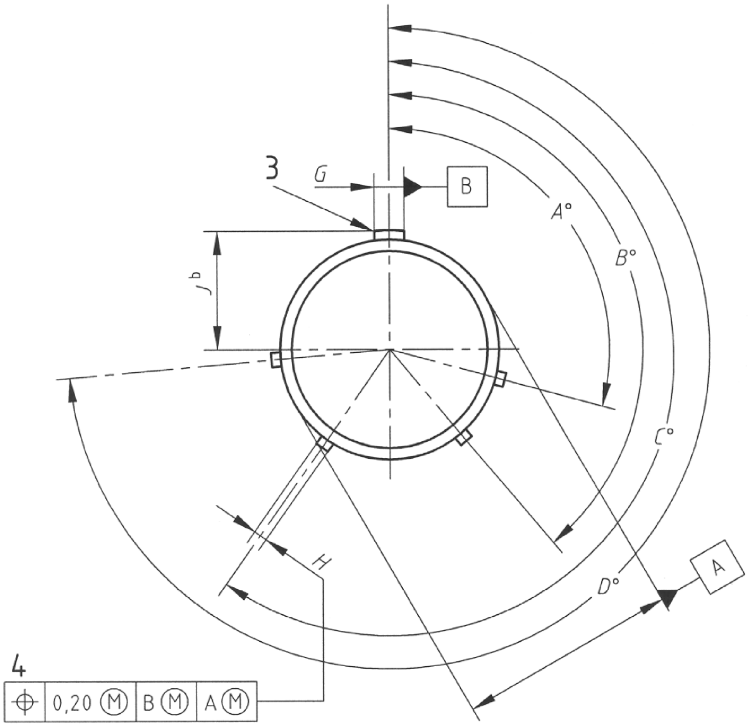

Key

1 Keyway for main key
2 Four secondary keyways
3 Main key
4 Four secondary keys
a Five keyways
b Five keys

Figure 5 — Receptacle and plug

Documents
Document Sharing Hub
Full document details: BS EN 2997-001:2017

Table 4 — Position of the keys and keyways

Position	Housing sizes - Values in degrees											
	08				10				12 to 28			
	A	*B*	*C*	*D*	*A*	*B*	*C*	*D*	*A*	*B*	*C*	*D*
N	105	140	215	265	105	140	215	265	105	140	215	265
6	102	132	248	320	102	132	248	320	18	149	192	259
7	80	118	230	312	80	118	230	312	92	152	222	342
8	35	140	205	275	35	140	205	275	84	152	204	334
9	64	155	234	304	64	155	234	304	24	135	199	240
Y	–	–	–	–	25	115	220	270	98	152	268	338

Table 5 — Dimensions of the keys and keyways

Housing size	*G*	*H*	*J*	*L*	*M*	*N*
08	2,21 2,05	1,40 1,24	5,72 5,64	2,47 2,31	1,96 1,83	5,92 5,79
10			7,24 7,16			7,45 7,32
12			9,40 9,32			9,60 9,47
14			10,29 10,21			10,49 10,36
16	3,00 2,84		11,89 11,81	3,26 3,10		12,09 11,96
18			13,23 13,15			13,44 13,31
20			14,81 14,73			15,01 14,58
22			16,41 16,33			16,61 16,48
24			17,98 17,90			18,19 18,06
28			21,16 21,08			21,42 21,29

AVA Documents
Document Sharing Hub

Full document details: BS EN 2997-001:2017

6.5 Dimensions of the rear interface

6.5.1 Dimensions of the rear accessory interface

The rear dimensions of receptacles and plugs with threads for mounting cable outlet accessories are shown in Figure 6 and in Table 7.

Accessory teeth shall be aligned with the centre line of the main key/keyway as shown in Figure 4 within the tolerances shown in Table 6.

Table 6 — Tolerances of alignment

Housing size	Alignment tolerance of axis
8 to 12	± 3°
14 to 18	± 2°
20 and greater	± 1°

Dimensions are in millimetres.

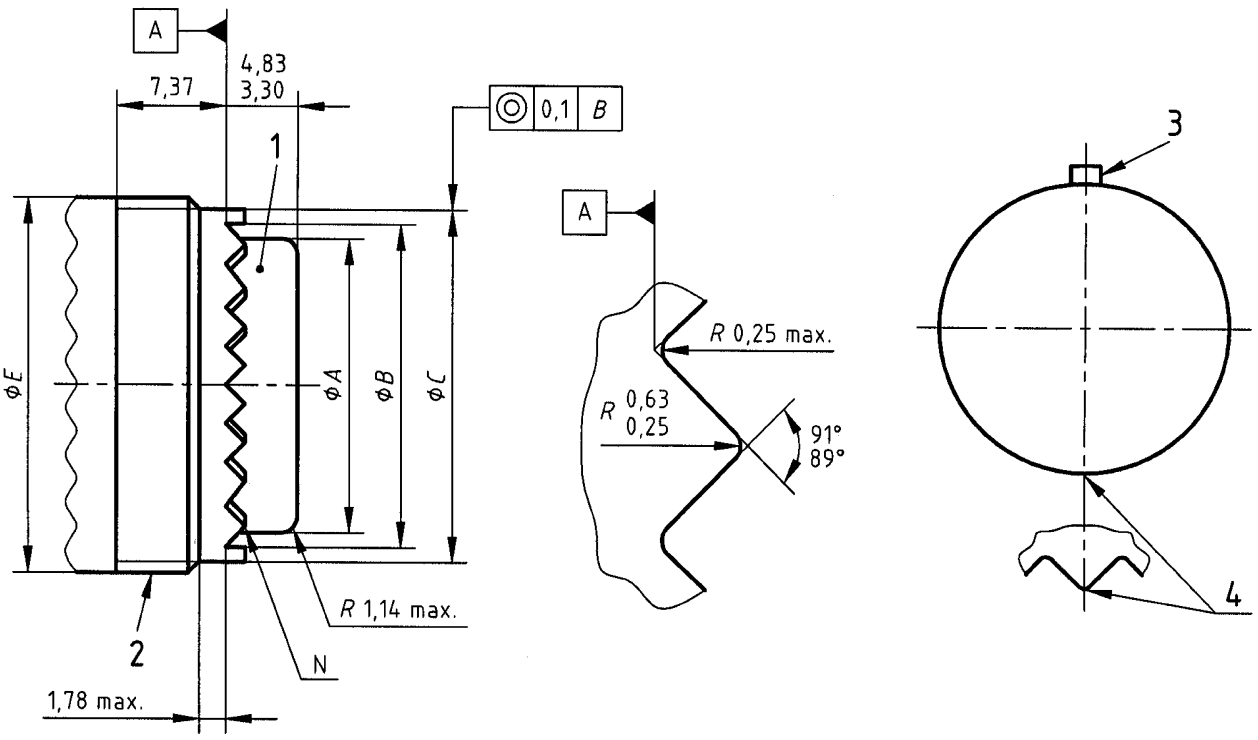

Key

1 Grommet
2 Thread
3 Master key
4 Crest of tooth

Figure 6

Documents
Document Sharing Hub
Full document details: BS EN 2997-001:2017

Table 7 — Dimensions of rear interface

Housing size	*ØA* max.	*ØB* min.	*ØC* max.	**Thread class 2A** [a]	*ØE* max.	N **Number of teeth**
08	7,75	9,40	11,10	0.500 - 20 UNF	12,70	12
10	10,29	12,62	14,53	0.6250 - 24 UNEF	15,88	15
12	13,49	15,57	17,45	0.7500 - 20 UNEF	19,05	21
14	16,89	18,75	20,62	0.8750 - 20 UNEF	22,23	24
16	20,07	21,92	23,80	1.0000 - 20 UNEF	25,40	30
18	22,07	23,34	25,20	1.0625 -18 UNEF	26,97	33
20	25,25	26,52	28,37	1.1875 - 18 UNEF	30,18	36
22	28,42	29,69	31,55	1.3125 - 18 UNEF	33,32	39
24	31,60	32,87	34,72	1.4375 - 18 UNEF	36,53	42
28	37,90	39,22	42,67	1.7500 - 18 UN	44,45	54

[a] ISO 263.

6.5.2 Dimensions of the rear cable entry (Integrated cable outlet)

Dimensions of rear cable entry for shield termination with band according to EN 3660-033, and accommodation for heat shrinkable accessory.

See Figures 7 to 9 and Table 8.

Documents
Document Sharing Hub
Full document details: BS EN 2997-001:2017

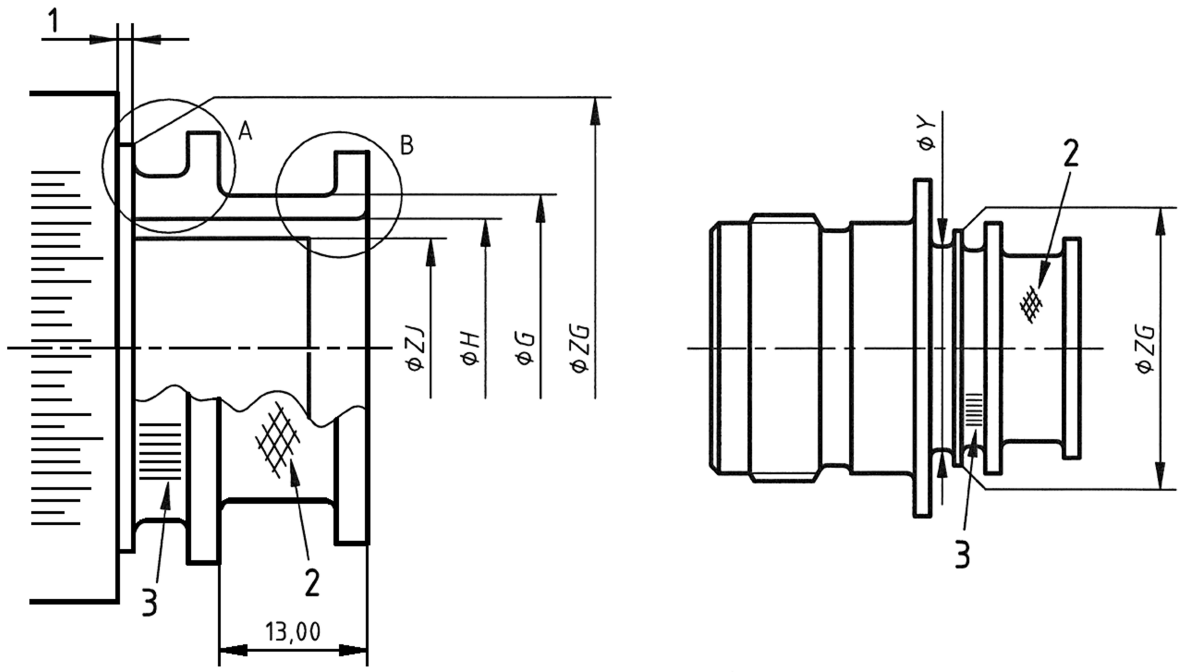

Key

1 0,13 REF. min. step (Ø*ZG*) to coupling nut rear face

2 Diamond knurl male or female (see below), pitch of 0,1 mm, width 10,5 mm min.

3 Straight knurl (see below), pitch of 1 mm, width 3 mm min.

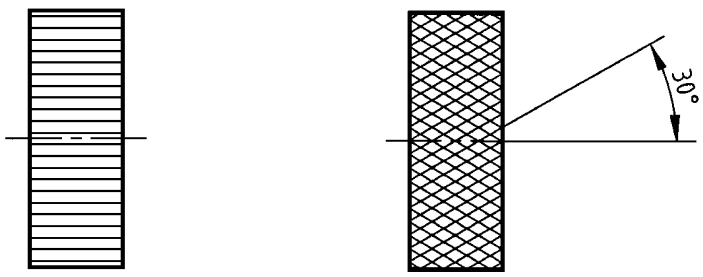

Straight **Diamond**

Figure 7

Documents
Document Sharing Hub
Full document details: BS EN 2997-001:2017

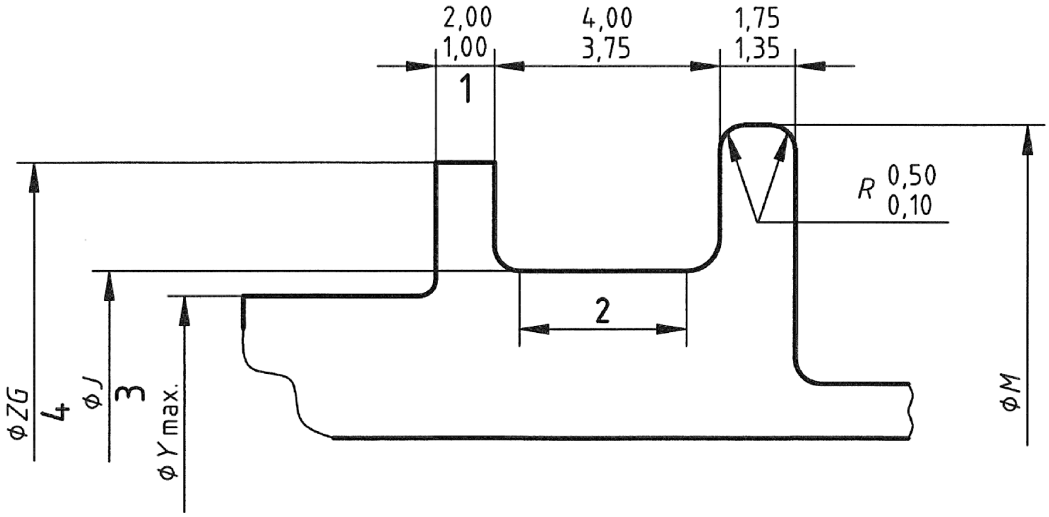

Connector side **Wiring side**

Key

1 Applicable to plug and receptacle. Except housing size 8: 1,5 max.
2 3 mm min. flat
3 Applicable to plug and receptacle
4 Applicable to receptacle

Figure 8 — Detail A

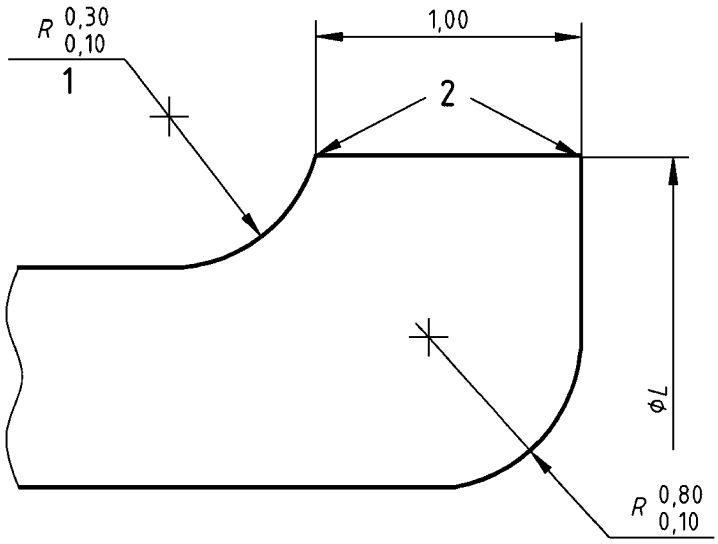

Key

1 Both ends of Ø*G*
2 No sharp edge

Figure 9 — Detail B

Documents
Document Sharing Hub
Full document details: BS EN 2997-001:2017