BS EN 4693:2017

BSI Standards Publication

Aerospace series - Tie rod with integrated bolts - Assembly code A, B and C

Documents
Document Sharing Hub

Full document details: BS EN 4693:2017

National foreword

This British Standard is the UK implementation of EN 4693:2017.

The UK participation in its preparation was entrusted to Technical Committee ACE/12, Aerospace fasteners and fastening systems.

A list of organizations represented on this committee can be obtained on request to its secretary.

This publication does not purport to include all the necessary provisions of a contract. Users are responsible for its correct application.

© The British Standards Institution 2017
Published by BSI Standards Limited 2017

ISBN 978 0 580 94028 6

ICS 49.035; 49.030.20

Compliance with a British Standard cannot confer immunity from legal obligations.

This British Standard was published under the authority of the Standards Policy and Strategy Committee on 31 October 2017.

Amendments/corrigenda issued since publication

Date	Text affected

Documents
Document Sharing Hub

Full document details: BS EN 4693:2017

EUROPEAN STANDARD

NORME EUROPÉENNE

EUROPÄISCHE NORM

EN 4693

October 2017

ICS 49.035

English Version

Aerospace series - Tie rod with integrated bolts - Assembly code A, B and C

Série aérospatiale - Bielle avec axes intégrés - Code assemblage A, B et C

Luft- und Raumfahrt - Zug-Druck Stange mit integrierten Bolzen - Variante A, B und C

This European Standard was approved by CEN on 25 June 2016.

CEN members are bound to comply with the CEN/CENELEC Internal Regulations which stipulate the conditions for giving this European Standard the status of a national standard without any alteration. Up-to-date lists and bibliographical references concerning such national standards may be obtained on application to the CEN-CENELEC Management Centre or to any CEN member.

This European Standard exists in three official versions (English, French, German). A version in any other language made by translation under the responsibility of a CEN member into its own language and notified to the CEN-CENELEC Management Centre has the same status as the official versions.

CEN members are the national standards bodies of Austria, Belgium, Bulgaria, Croatia, Cyprus, Czech Republic, Denmark, Estonia, Finland, Former Yugoslav Republic of Macedonia, France, Germany, Greece, Hungary, Iceland, Ireland, Italy, Latvia, Lithuania, Luxembourg, Malta, Netherlands, Norway, Poland, Portugal, Romania, Serbia, Slovakia, Slovenia, Spain, Sweden, Switzerland, Turkey and United Kingdom.

EUROPEAN COMMITTEE FOR STANDARDIZATION
COMITÉ EUROPÉEN DE NORMALISATION
EUROPÄISCHES KOMITEE FÜR NORMUNG

CEN-CENELEC Management Centre: Avenue Marnix 17, B-1000 Brussels

© 2017 CEN All rights of exploitation in any form and by any means reserved worldwide for CEN national Members.

Ref. No. EN 4693:2017 E

Documents
Document Sharing Hub

Full document details: BS EN 4693:2017

Contents Page

European foreword 3
Introduction 4
1 Scope 5
2 Normative references 5
3 Requirements 6
4 Assembly code definitions 6
5 Materials 8
6 Locking clips 9
7 Fork and eye ends 11
8 Mass calculation of tie rods 19
9 Marking 21
10 Dimensions 22
11 Designation 22
12 Technical specification 22
Annex A (informative) Standard evolution form 23

Documents
Document Sharing Hub
Full document details: BS EN 4693:2017

European foreword

This document (EN 4693:2017) has been prepared by the Aerospace and Defence Industries Association of Europe - Standardization (ASD-STAN).

After enquiries and votes carried out in accordance with the rules of this Association, this Standard has received the approval of the National Associations and the Official Services of the member countries of ASD, prior to its presentation to CEN.

This European Standard shall be given the status of a national standard, either by publication of an identical text or by endorsement, at the latest by April 2018, and conflicting national standards shall be withdrawn at the latest by April 2018.

Attention is drawn to the possibility that some of the elements of this document may be the subject of patent rights. CEN [and/or CENELEC] shall not be held responsible for identifying any or all such patent rights.

According to the CEN-CENELEC Internal Regulations, the national standards organizations of the following countries are bound to implement this European Standard: Austria, Belgium, Bulgaria, Croatia, Cyprus, Czech Republic, Denmark, Estonia, Finland, Former Yugoslav Republic of Macedonia, France, Germany, Greece, Hungary, Iceland, Ireland, Italy, Latvia, Lithuania, Luxembourg, Malta, Netherlands, Norway, Poland, Portugal, Romania, Serbia, Slovakia, Slovenia, Spain, Sweden, Switzerland, Turkey and the United Kingdom.

AVA Documents
Document Sharing Hub

Full document details: BS EN 4693:2017

Introduction

Aerospace and Defence Standardization (ASD-STAN) draws attention to the fact that it is claimed that compliance with this document may involve the use of a patent.

USA: US 8371767

China: CN 10104431

Japan: JP 4885140

Russia: RU 2389914

South Africa: ZA 2007/03913

Canada: 2584387

South Korea: 7011559

ASD-STAN takes no position concerning the evidence, validity and scope of this patent right.

The holder of this patent right has assured ASD-STAN that he/she is willing to negotiate licences under reasonable and non-discriminatory terms and conditions with applicants throughout the world. In this respect, the statement of the holder of this patent right is registered with ASD-STAN. Information may be obtained from:

GMT Gummi-Metall-Technik GmbH
Liechtersmatten 5
D-77815 Bühl

TRIGUM Engineering GmbH
Brunskamp 4
D-21220 Seevetal/Maschen

Attention is drawn to the possibility that some of the elements of this document may be the subject of patent rights other than those identified above. ASD-STAN shall not be held responsible for identifying any or all such patent rights.

Documents
Document Sharing Hub
Full document details: BS EN 4693:2017

1 Scope

This standard specifies the dimensions and tolerances of rod assemblies for aerospace applications with two adjustable ends with integrated bolts for interior and sub structure in the temperature range – 55 °C to 85 °C. The rod ends should not be screwed completely apart.

2 Normative references

The following documents, in whole or in part, are normatively referenced in this document and are indispensable for its application. For dated references, only the edition cited applies. For undated references, the latest edition of the referenced document (including any amendments) applies.

DIN 6799, *Retaining washers for shafts*[1)]

DIN 65038-1, *Aerospace — Steel, nickel- and cobalt-alloy bars — Technical specification*[1)]

EN 2424, *Aerospace series — Marking of aerospace products*

EN 3311, *Aerospace series — Titanium alloy TI-P64001 (Ti-6Al-4V) — Annealed — Bar for machining — D < 110 mm*

EN 4614, *Aerospace series — Spherical plain bearings in corrosion resisting steel with self-lubricating liner wide series — Dimensions and loads — Inch series*

EN 4691-1, *Aerospace series — Tie rod with integrated bolts — Part 1: Technical specification*

EN 4692, *Aerospace series — Tie rod with integrated bolts — Locking clip*

EN 10088-3, *Stainless steels — Part 3: Technical delivery conditions for semi-finished products, bars, rods, wire, sections and bright products of corrosion resisting steels for general purposes*

ISO 2768-1, *General tolerances — Part 1: Tolerances for linear and angular dimensions without individual tolerance indications*

ISO 2768-2, *General tolerances — Part 2: Geometrical tolerances for features without individual tolerance indications*

ISO 8075, *Aerospace series — Surface treatment of hardenable stainless steel parts*

LN 9368-4, *Aerospace — Designation of surface treatments — Part 4: Code numbers for methods of anodic treatment*[1)]

LN 9368-7, *Aerospace — Designation of surface treatments — Part 7: Code numbers for methods of organic coating*[1)]

WL 1.4548 (all parts), *Aerospace — Precipitation-hardening stainless chromium-nickel-copper steel with approx. 0,05C-16Cr-4Cu-4Ni*[1)]

WL 3.1354 (all parts), *Aerospace — Wrought aluminium alloy with approx. 4,4Cu-1,5Mg-0,6Mn*[1)]

FAR/JAR/CS 25.853, *Compartment Interiors*[2)]

---

1) Published by: Beuth Verlag GmbH. www.beuth.de

2) European Aviation Safety Agency, Postfach 101253, D-50452 Koeln, Germany.

Documents
Document Sharing Hub
Full document details: BS EN 4693:2017

3 Requirements

3.1 Configuration, dimensions, tolerances and masses

3.1.1 Configuration

The configuration shall be in accordance with Figure 1, Figure 2 and Figure 3.

3.1.2 Dimensions, tolerances and masses

Dimensions are in millimetres, tolerances and masses in accordance to Table 4, Table 5, Table 6, Table 7 and Table 8. General tolerances shall be in accordance to ISO 2768-mK. Missing dimensions are manufacturing options.

4 Assembly code definitions

Assembly code A, B and C are shown in Figure 1, Figure 2 and Figure 3. For assembly code A, B and C: $d_1 = 20$ mm and adjustable range for $L_1 = \pm$ 12,7 mm.

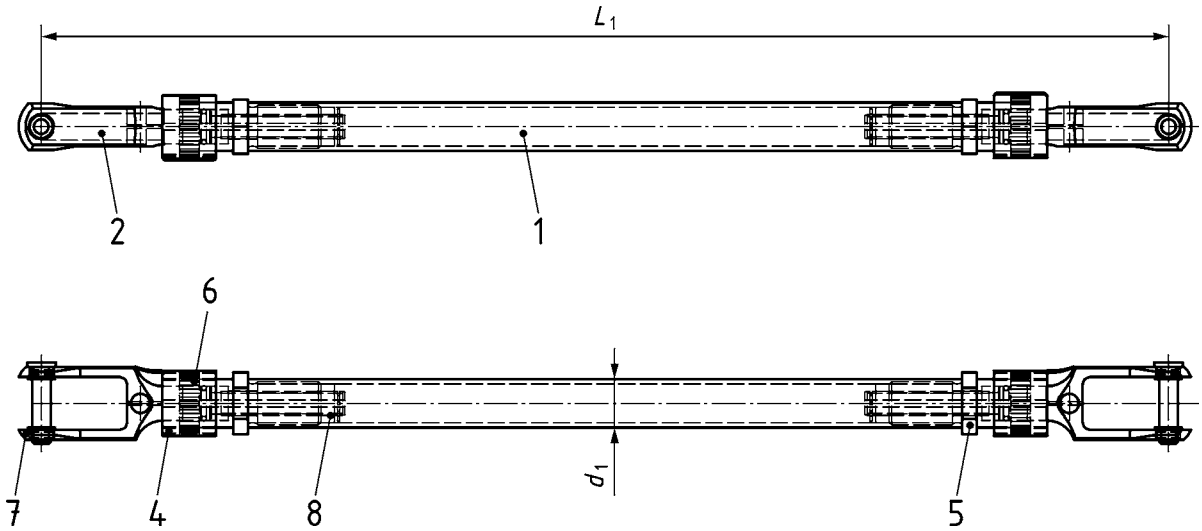

Key

1 – 2 – 4 – 5 – 6 – 7 and 8 The position numbers and the materials are shown in Table 1 and Table 2.

Figure 1 — Assembly code A

Documents
Document Sharing Hub
Full document details: BS EN 4693:2017

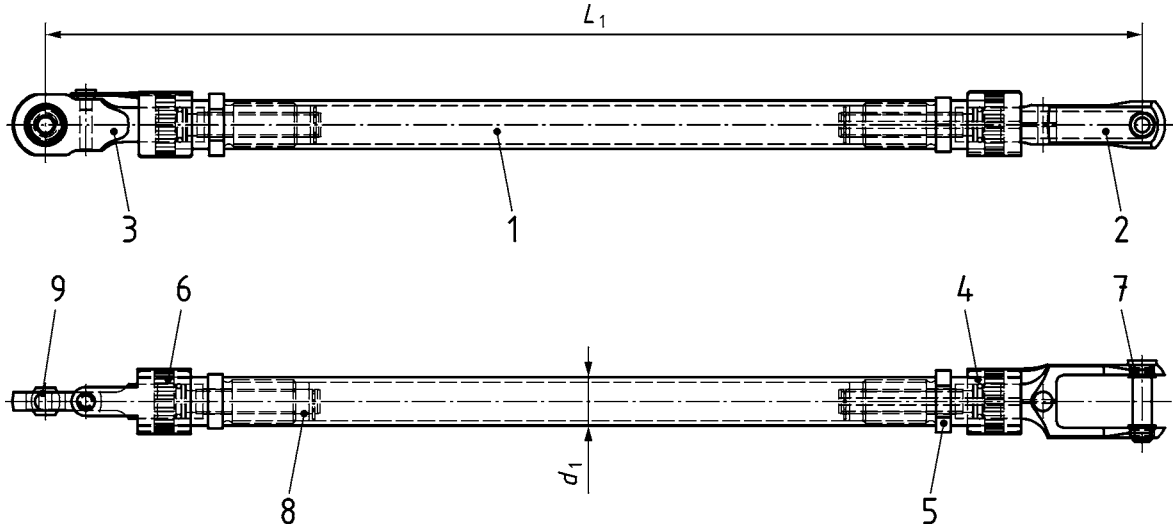

Key

1 – 2 – 3 – 4 – 5 – 6 – 7 – 8 and 9 The position numbers and the materials are shown in Table 1 and Table 2.

Figure 2 — Assembly code B

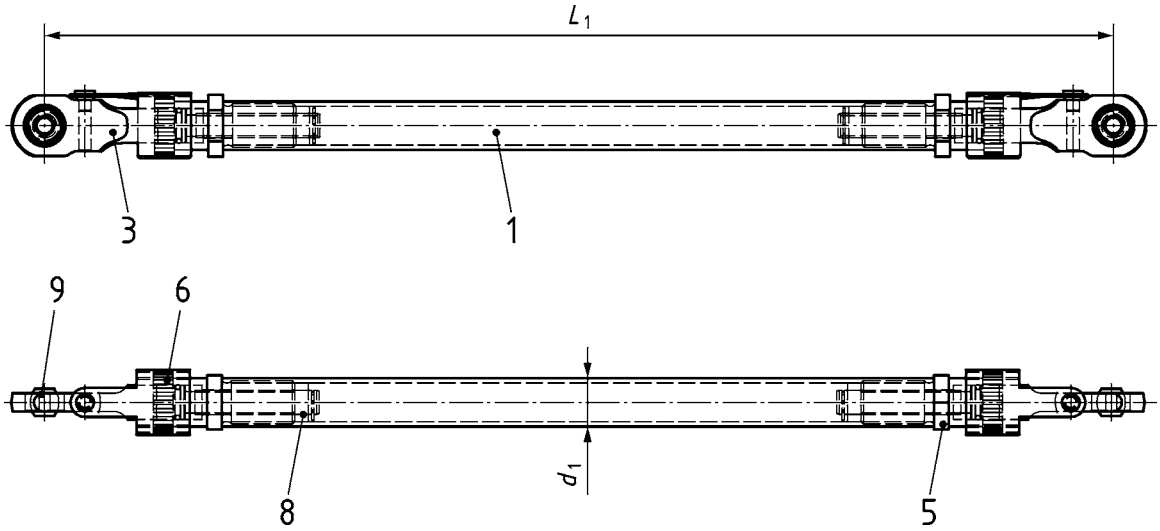

Key

1 – 3 – 5 – 6 – 8 and 9 The position numbers and the materials are shown in Table 1 and Table 2.

Figure 3 — Assembly code C

Documents
Document Sharing Hub
Full document details: BS EN 4693:2017