BS EN 474-10:2022

BSI Standards Publication

# Earth-moving machinery — Safety

Part 10: Requirements for trenchers

Documents
Document Sharing Hub

Full document details: BS EN 474-10:2022

# National foreword

This British Standard is the UK implementation of EN 474-10:2022. It supersedes BS EN 474-10:2006+A1:2009, which is withdrawn.

The UK participation in its preparation was entrusted to Technical Committee B/513/1, Earth moving machinery (International).

A list of organizations represented on this committee can be obtained on request to its committee manager.

**Contractual and legal considerations**

This publication has been prepared in good faith, however no representation, warranty, assurance or undertaking (express or implied) is or will be made, and no responsibility or liability is or will be accepted by BSI in relation to the adequacy, accuracy, completeness or reasonableness of this publication. All and any such responsibility and liability is expressly disclaimed to the full extent permitted by the law.

This publication is provided as is, and is to be used at the recipient's own risk.

The recipient is advised to consider seeking professional guidance with respect to its use of this publication.

This publication is not intended to constitute a contract. Users are responsible for its correct application.

This publication has been prepared under a mandate given to the European Standards Organizations by the European Commission and the European Free Trade Association. It is intended to support requirements of the EU legislation detailed in the European Foreword. A European Annex, usually Annex ZA or ZZ, describes how this publication relates to that EU legislation.

For the Great Britain market (England, Scotland and Wales), if UK Government has designated this publication for conformity with UKCA marking (or similar) legislation, it may contain an additional National Annex. Where such a National Annex exists, it shows the correlation between this publication and the relevant UK legislation. If there is no National Annex of this kind, the relevant Annex ZA or ZZ in the body of the European text will indicate the relationship to UK regulation applicable in Great Britain. References to EU legislation may need to be read in accordance with the UK designation and the applicable UK law. Further information on designated standards can be found at www.bsigroup.com/standardsandregulation.

For the Northern Ireland market, UK law will continue to implement relevant EU law subject to periodic confirmation. Therefore Annex ZA/ZZ in the European text, and references to EU legislation, are still valid for this market.

UK Government is responsible for legislation. For information on legislation and policies relating to that legislation, consult the relevant pages of www.gov.uk.

© The British Standards Institution 2022
Published by BSI Standards Limited 2022

ISBN 978 0 580 96896 9

Documents
Document Sharing Hub

Full document details: BS EN 474-10:2022

ICS 53.100

**Compliance with a British Standard cannot confer immunity from legal obligations.**

This British Standard was published under the authority of the Standards Policy and Strategy Committee on 31 August 2022.

**Amendments/corrigenda issued since publication**

| Date | Text affected |
|---|---|

Documents
Document Sharing Hub

Documents
Document Sharing Hub

EUROPEAN STANDARD

NORME EUROPÉENNE

EUROPÄISCHE NORM

# EN 474-10

March 2022

ICS 53.100

Supersedes EN 474-10:2006+A1:2009

English Version

# Earth-moving machinery - Safety - Part 10: Requirements for trenchers

Engins de terrassement - Sécurité - Partie 10 : Prescriptions applicables aux trancheuses

Erdbaumaschinen - Sicherheit - Teil 10: Anforderungen für Grabenfräsen

This European Standard was approved by CEN on 14 February 2022.

CEN members are bound to comply with the CEN/CENELEC Internal Regulations which stipulate the conditions for giving this European Standard the status of a national standard without any alteration. Up-to-date lists and bibliographical references concerning such national standards may be obtained on application to the CEN-CENELEC Management Centre or to any CEN member.

This European Standard exists in three official versions (English, French, German). A version in any other language made by translation under the responsibility of a CEN member into its own language and notified to the CEN-CENELEC Management Centre has the same status as the official versions.

CEN members are the national standards bodies of Austria, Belgium, Bulgaria, Croatia, Cyprus, Czech Republic, Denmark, Estonia, Finland, France, Germany, Greece, Hungary, Iceland, Ireland, Italy, Latvia, Lithuania, Luxembourg, Malta, Netherlands, Norway, Poland, Portugal, Republic of North Macedonia, Romania, Serbia, Slovakia, Slovenia, Spain, Sweden, Switzerland, Turkey and United Kingdom.

EUROPEAN COMMITTEE FOR STANDARDIZATION
COMITÉ EUROPÉEN DE NORMALISATION
EUROPÄISCHES KOMITEE FÜR NORMUNG

**CEN-CENELEC Management Centre: Rue de la Science 23, B-1040 Brussels**

© 2022 CEN All rights of exploitation in any form and by any means reserved worldwide for CEN national Members.

Ref. No. EN 474-10:2022 E

Documents
Document Sharing Hub

Full document details: BS EN 474-10:2022

# Contents

Page

European foreword ... 3
Introduction ... 5
1 Scope ... 6
2 Normative references ... 6
3 Terms and definitions ... 7
4 Safety requirements and/or protective/risk reduction measures ... 9
4.1 General ... 9
4.2 Access requirements for truck vacuum trenchers ... 9
4.3 Operator's station ... 10
4.4 Seat ... 11
4.5 Operator's controls and indicators ... 11
4.6 Visibility ... 13
4.7 Forward horns and safety signs ... 13
4.8 Noise emission measurement ... 13
4.9 Protective measures and devices ... 13
4.10 Electrical and electronic systems ... 17
4.11 Hydraulic fluid systems ... 17
4.12 Fuel tanks, DEF/urea tanks, hydraulic tanks and pressure vessels ... 18
4.13 Fire protection ... 18
4.14 Maintenance ... 18
4.15 Additional requirements for truck-vacuum trenchers ... 19
4.16 Additional requirements for belt conveyors ... 19
5 Verification of the safety requirements and/or protective/risk reduction measures ... 20
6 Information for use ... 22
6.1 General ... 22
6.2 Machine safety labels ... 22
6.3 Operator's manual ... 23
Annex A (informative) List of significant hazards ... 25
Annex B (informative) Illustrations ... 29
Annex ZA (informative) Relationship between this European Standard and the essential requirements of Directive 2006/42/EC machinery, and amending Directive 95/16/EC (recast) [2006 L157] aimed to be covered ... 36
Bibliography ... 41



Documents
Document Sharing Hub
Full document details: BS EN 474-10:2022

## European foreword

This document (EN 474-10:2022) has been prepared by Technical Committee CEN/TC 151 “Construction equipment and building material machines - Safety”, the secretariat of which is held by DIN.

This European Standard shall be given the status of a national standard, either by publication of an identical text or by endorsement, at the latest by September 2022, and conflicting national standards shall be withdrawn at the latest by March 2024.

Attention is drawn to the possibility that some of the elements of this document may be the subject of patent rights. CEN shall not be held responsible for identifying any or all such patent rights.

This document supersedes EN 474-10:2006+A1:2009.

This document has been prepared under a standardization request given to CEN by the European Commission and the European Free Trade Association, and supports essential requirements of EU Directive(s).

For relationship with EU Directive(s), see informative Annex ZA, which is an integral part of this document.

For bibliographic references, see EN 474-1:2022.

EN 474 “Earth-moving machinery — Safety” comprises the following parts:

— Part 1: General requirements

— Part 2: Requirements for tractor-dozers

— Part 3: Requirements for loaders

— Part 4: Requirements for backhoe-loaders

— Part 5: Requirements for hydraulic excavators

— Part 6: Requirements for dumpers

— Part 7: Requirements for scrapers

— Part 8: Requirements for graders

— Part 9: Requirements for pipelayers

— Part 10: Requirements for trenchers

— Part 11: Requirements for earth and landfill compactors

— Part 12: Requirements for cable excavators

— Part 13: Requirements for rollers

This document is intended for use in combination with part 1 of the series.

Documents
Document Sharing Hub



Full document details: BS EN 474-10:2022

The main changes between this document and EN 474-10:2006+A1:2009 are as follows:

a) definitions and illustrations corresponding to categories of trenchers now covered in EN 474-10 (added);

b) safety-related functions of control systems (excluded);

c) safety requirements (e.g. maintenance mode and protective measures) for categories of products already covered in the superseded version and new categories of products (e.g. truck vacuum trenchers, trencher backhoe equipment) (added);

d) normative references (updated);

e) verification methods table (added) (Clause 5);

f) Annex A (updated);

g) Annex ZA (updated).

Any feedback and questions on this document should be directed to the users' national standards body. A complete listing of these bodies can be found on the CEN website.

According to the CEN-CENELEC Internal Regulations, the national standards organisations of the following countries are bound to implement this European Standard: Austria, Belgium, Bulgaria, Croatia, Cyprus, Czech Republic, Denmark, Estonia, Finland, France, Germany, Greece, Hungary, Iceland, Ireland, Italy, Latvia, Lithuania, Luxembourg, Malta, Netherlands, Norway, Poland, Portugal, Republic of North Macedonia, Romania, Serbia, Slovakia, Slovenia, Spain, Sweden, Switzerland, Turkey and the United Kingdom.



Documents
Document Sharing Hub

Full document details: BS EN 474-10:2022

# Introduction

This document is a type-C standard as stated in EN ISO 12100:2010.

This document is of relevance, in particular, for the following stakeholder groups representing the market players with regard to machinery safety:

— machine manufacturers (small, medium and large enterprises);

— health and safety bodies (regulators, accident prevention organizations, market surveillance, etc.).

Others can be affected by the level of machinery safety achieved with the means of the document by the above-mentioned stakeholder groups:

— machine users/employers (small, medium and large enterprises);

— machine users/employees (e.g. trade unions, organizations for people with special needs);

— service providers, e.g. for maintenance (small, medium and large enterprises);

— consumers (in case of machinery intended for use by consumers).

The above-mentioned stakeholder groups have been given the possibility to participate at the drafting process of this document.

The machinery concerned and the extent to which hazards, hazardous situations or hazardous events are covered are indicated in the Scope of this document.

When requirements of this type-C standard are different from those which are stated in type-A or type-B standards, the requirements of this type-C standard take precedence over the requirements of the other standards for machines that have been designed and built according to the requirements of this type-C standard.



Documents
Document Sharing Hub
Full document details: BS EN 474-10:2022

# 1 Scope

This document together with EN 474-1:2022 deals with all significant hazards, hazardous situations and events relevant to trenchers as defined in Clause 3 when used as intended and under the conditions of misuse which are reasonably foreseeable by the manufacturer (see Annex A) associated with the whole lifetime of the machine as described in EN ISO 12100:2010, 5.4.

The requirements of this document are complementary to the common requirements formulated in EN 474-1:2022. This document does not repeat the requirements of EN 474-1:2022 but supplements or modifies the requirements for trenchers.

This document deals with:

— trenchers (3.1);

— trenching equipment (3.2);

NOTE In this document "trenchers" entails both "trencher" and "trenching equipment".

— truck vacuum trenchers (3.1.2);

— trenchers equipped with trencher backhoe equipment (3.3).

This document provides specific health and safety requirements of the trenching equipment itself and of the interface (e.g. mechanical, electric, hydraulic, controls) between the carrier-vehicle and its equipment as well as the interaction and effects on each other when used together (e.g. visibility).

This document does not apply to carrier-vehicles which are subject to other relevant regulations.

This document does not deal with continuous surface miners as defined in ISO 19224:2017, truck-trenchers that do not incorporate a vacuum extraction system or self-propelled ride-on and pedestrian controlled floor cutting-off machinery (e.g. ground saw) which are under the scope of EN 13862:2021.

This document does not provide requirements for main electrical circuits and drives of machinery when the primary source of energy is an external electrical supply.

This document does not provide performance requirements for safety related functions of control system(s).

The following significant and relevant hazards are not covered in this document:

— Transmission of power between self-propelled machinery (or tractor) and recipient machinery;

— Laser;

— Lightning.

This document is not applicable to trenchers which are manufactured before the date of publication of this document by CEN.

# 2 Normative references

The following documents are referred to in the text in such a way that some or all of their content constitutes requirements of this document. For dated references, only the edition cited applies. For undated references, the latest edition of the referenced document (including any amendments) applies.

EN 474-1:2022, *Earth-moving machinery — Safety — Part 1: General requirements*

EN 620:2021, *Continuous handling equipment and systems — Safety requirements for fixed belt conveyors for bulk materials*

EN 795:2012, *Personal fall protection equipment — Anchor devices*



Documents
Document Sharing Hub
Full document details: BS EN 474-10:2022

EN 856:2015+AC:2019, *Rubber hoses and hose assemblies — Rubber-covered spiral wire reinforced hydraulic type — Specification*

EN ISO 6682:2008, *Earth-moving machinery — Zones of comfort and reach for controls (ISO 6682:1986, including Amd 1:1989)*

EN ISO 12100:2010, *Safety of machinery — General principles for design — Risk assessment and risk reduction (ISO 12100:2010)*

ISO 6393:2008, *Earth-moving machinery — Determination of sound power level — Stationary test conditions*

ISO 6394:2008, *Earth-moving machinery — Determination of emission sound pressure level at operator's position — Stationary test conditions*

ISO 6394:2008/Cor 1:2009, *Earth-moving machinery — Determination of emission sound pressure level at operator's position — Stationary test conditions — Technical Corrigendum 1*

ISO 6405-1:2017, *Earth-moving machinery — Symbols for operator controls and other displays — Part 1: Common symbols*

ISO 11112:1995, *Earth-moving machinery — Operator's seat — Dimensions and requirements*

ISO 11112:1995/AMD 1:2001, *Earth-moving machinery — Operator's seat — Dimensions and requirements*

ISO 16001:2017, *Earth-moving machinery — Object detection systems and visibility aids — Performance requirements and tests*

## 3 Terms and definitions

For the purposes of this document, the terms and definitions given in EN 474-1:2022 and EN ISO 12100:2010 and the following apply.

ISO and IEC maintain terminological databases for use in standardization at the following addresses:

— IEC Electropedia: available at https://www.electropedia.org/

— ISO Online browsing platform: available at https://www.iso.org/obp

**3.1**
**trencher**
self-propelled crawler or wheeled machine, having rear- and/or front-mounted equipment (trenching equipment (3.4)), primarily designed to produce a trench in a continuous operation, through motion of the machine

[SOURCE: EN ISO 6165:2012, 4.5]

Note 1 to entry: See examples in Annex B.

Note 2 to entry: Terminology for trenchers is specified in ISO 13539:1998.



Documents
Document Sharing Hub
Full document details: BS EN 474-10:2022

**3.1.1**
**trencher with mechanized laying unit**
trencher designed and manufactured in order to produce in a single operation a trench and a mechanized laying for simultaneous deployment of networks (e.g. pipes for gas, electricity, water or cables for telecommunication) in urban or rural environment

Note 1 to entry: This machine can be fitted with a cable holder equipment, a cable guide equipment and a towing device of slip formwork (see examples in Annex B).

**3.1.2**
**truck-vacuum trencher**
trencher consisting of a combination of trenching equipment and a vacuum system integrated to a truck in order to produce micro-trenches and simultaneously to remove and store debris

Note 1 to entry See example in Figure B.13.

**3.1.3**
**compact chain trencher**
trencher equipped with a digging chain having a base machine mass less than 4 500 kg

**3.2**
**trenching equipment**
assembly of components for making a trench (3.4) either permanently integrated into a carrier, or interchangeable equipment mounted on a separate carrier (e.g. self-propelled carrier, truck or tractor)

Note 1 to entry: In definitions 3.1 to 3.3, the equipment can be a digging chain, disc/wheel, plough or similar tool.

**3.3**
**trencher backhoe equipment**
integral device which generally excavates towards the machine and below ground level and which elevates, swings and dumps material by the action of a boom, arm and bucket

Note 1 to entry: See Figure B.5.

**3.4**
**trench**
narrow horizontal excavation for which, in general, the depth is greater than the width

**3.5**
**reel carrier-equipment**
integral structure transporting and dispensing a spool of cables or other material during the trenching operation

Note 1 to entry: See Figures B.1 to B.3.

**3.6**
**continuous material handling system**
system integrated to the trencher and intended to evacuate materials coming from the trenching application

Note 1 to entry: This system can be a belt conveyor, a combination of several belt conveyors (see Figure B.11), a pneumatic transportation equipment (see Figure B.13), etc.

**3.7**
**working depth**
trenching depth range of the trencher, from minimum depth to maximum depth, as defined by the manufacturer in the instruction's handbook



Documents
Document Sharing Hub
Full document details: BS EN 474-10:2022

**3.8**
**protective bar**
structure generally above and parallel to the digging chain to protect against contact with the digging element

Note 1 to entry: A protective bar can be a restraint bar or trench cleaner bar as shown in ISO 13539:1998, Figure 5.

Note 2 to entry: See Figures B.8 to B.10.

**3.9**
**guard**
physical barrier, designed as part of the machine to provide protection

Note 1 to entry: A guard may act either:

— alone, in which case it is only effective when "closed" (for a movable guard) or "securely held in place" (for a fixed guard), or

— in conjunction with an interlocking device with or without guard locking, in which case protection is ensured whatever the position of the guard.

Note 2 to entry: Depending on its construction, a guard may be described as, for example, casing, shield, cover, screen, door, enclosing guard.

[SOURCE ISO 12100:2010, 3.27]

# 4 Safety requirements and/or protective/risk reduction measures

## 4.1 General

### 4.1.1 Context

Trenchers shall comply with the safety requirements and/or protective/risk reduction measures of this clause. In addition, the machines shall be designed according to the principles of EN ISO 12100:2010 for relevant but not significant hazards which are not dealt with by this document.

### 4.1.2 Specific relation to EN 474-1

Trenchers shall comply with the requirements of EN 474-1:2022, as far as not modified or replaced by the requirements of this part.

There are general requirements specified in EN 474-1:2022 that are not applicable because the risk assessment has shown that for trenchers the corresponding hazard does not exist. For trenchers, 4.3.2.3, 4.3.4, 4.6.2, 4.12, 4.21, 4.23, Annex B, Annex C and Annex D in EN 474-1:2022, are not applicable.

## 4.2 Access requirements for truck vacuum trenchers

For truck-vacuum trenchers, EN 474-1:2022, 4.2 does not apply and is replaced by the following:

For truck vacuum trenchers, means of access shall comply with relevant clauses of ISO 2867:2011.

In case of means of access constituted of two different accesses (e.g. step integrated to roof part and ladder fitted to hopper part), the intermediate means of access (e.g. step) between the roof platform and the ladder shall be designed in such a way that:

— step proportion (*J*) is maintained between the higher step of the ladder and the roof platform in accordance with ISO 2867:2011, Table 4 (see also Figure 1);



Documents
Document Sharing Hub
Full document details: BS EN 474-10:2022

— tread projection from riser (*H*) is no more than 25 mm regarding the higher step of the ladder in accordance with ISO 2867:2011, Table 4 (see also Figure 1).

A handrail shall be fitted on the roof platform to ensure three point supports during egress and descent and located so that it is not within the walkway.

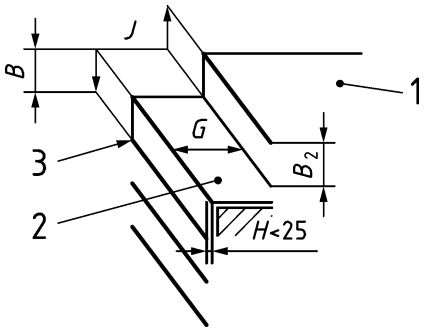


**Key**

1 roof platform
2 step (intermediate means of access)
3 higher step of ladder
*B* riser height for the ladder between 230 mm and 400 mm
$B_2$ riser height of maximum 250 mm
*G* stride distance of minimum 215 mm
*H* tread projection from riser
*J* step proportion

**Figure 1 — Step proportion**

The step proportion shall meet the following formula, applying the dimensions according to Figure 1:

$$J = \left(G + B + B_2\right) < 800\ mm$$

By exception to ISO 2867:2011, 6.2.3, first sentence, the following requirements apply:

— the working area of the roof platform shall be fitted with anti-slip surface;

— guardrail(s) shall be provided along lateral open side(s) of the roof platform;

— retractable anchorage point(s) shall be fitted on the roof platform and located in such a way that it (or they) allow an access on each opening/trap door for maintenance purpose and designed according to EN 795:2012;

— anchorage points intended to be used for lifting the roof of the hopper in case of failure of hydraulic lifting system shall be identified with a pictogram according to ISO 6405-1:2017, symbol 9.47, in order to avoid any misuse with retractable anchorage point(s).

## 4.3 Operator's station

EN 474-1:2022, 4.3 shall apply, except 4.3.2.3 and 4.3.4.

Trencher backhoe equipment shall be equipped with a separate operator's station.



Documents
Document Sharing Hub
Full document details: BS EN 474-10:2022