BS EN 476:2022

BSI Standards Publication

General requirements for components used in drains and sewers

Documents
Document Sharing Hub

Full document details: BS EN 476:2022

National foreword

This British Standard is the UK implementation of EN 476:2022. It supersedes BS EN 476:2011, which is withdrawn.

The UK participation in its preparation was entrusted to Technical Committee B/505, Wastewater engineering.

A list of organizations represented on this committee can be obtained on request to its committee manager.

Contractual and legal considerations

This publication has been prepared in good faith, however no representation, warranty, assurance or undertaking (express or implied) is or will be made, and no responsibility or liability is or will be accepted by BSI in relation to the adequacy, accuracy, completeness or reasonableness of this publication. All and any such responsibility and liability is expressly disclaimed to the full extent permitted by the law.

This publication is provided as is, and is to be used at the recipient's own risk.

The recipient is advised to consider seeking professional guidance with respect to its use of this publication.

This publication is not intended to constitute a contract. Users are responsible for its correct application.

© The British Standards Institution 2022
Published by BSI Standards Limited 2022

ISBN 978 0 539 13311 0

ICS 23.040.01; 23.040.05; 91.140.80; 93.030

Compliance with a British Standard cannot confer immunity from legal obligations.

This British Standard was published under the authority of the Standards Policy and Strategy Committee on 31 May 2022.

Amendments/corrigenda issued since publication

Date	Text affected

Documents
Document Sharing Hub

Full document details: BS EN 476:2022

EUROPEAN STANDARD

NORME EUROPÉENNE

EUROPÄISCHE NORM

EN 476

April 2022

ICS 93.030; 23.040.05

Supersedes EN 476:2011

English Version

General requirements for components used in drains and sewers

Exigences générales pour les composants utilisés pour les branchements et les collecteurs d'assainissement

Allgemeine Anforderungen an Bauteile für Abwasserleitungen und -kanäle

This European Standard was approved by CEN on 20 March 2022.

CEN members are bound to comply with the CEN/CENELEC Internal Regulations which stipulate the conditions for giving this European Standard the status of a national standard without any alteration. Up-to-date lists and bibliographical references concerning such national standards may be obtained on application to the CEN-CENELEC Management Centre or to any CEN member.

This European Standard exists in three official versions (English, French, German). A version in any other language made by translation under the responsibility of a CEN member into its own language and notified to the CEN-CENELEC Management Centre has the same status as the official versions.

CEN members are the national standards bodies of Austria, Belgium, Bulgaria, Croatia, Cyprus, Czech Republic, Denmark, Estonia, Finland, France, Germany, Greece, Hungary, Iceland, Ireland, Italy, Latvia, Lithuania, Luxembourg, Malta, Netherlands, Norway, Poland, Portugal, Republic of North Macedonia, Romania, Serbia, Slovakia, Slovenia, Spain, Sweden, Switzerland, Turkey and United Kingdom.

EUROPEAN COMMITTEE FOR STANDARDIZATION
COMITÉ EUROPÉEN DE NORMALISATION
EUROPÄISCHES KOMITEE FÜR NORMUNG

CEN-CENELEC Management Centre: Rue de la Science 23, B-1040 Brussels

© 2022 CEN All rights of exploitation in any form and by any means reserved worldwide for CEN national Members.

Ref. No. EN 476:2022 E

Documents
Document Sharing Hub

Full document details: BS EN 476:2022

Contents

Page

European foreword 4
1 Scope 5
2 Normative references 6
3 Terms and definitions 6
4 Symbols and abbreviations 12
5 Dimensional requirements 13
5.1 General 13
5.2 Dimensions of pipes and fittings 13
5.2.1 Nominal sizes 13
5.2.2 Internal diameters and tolerances 13
5.2.3 Geometrical characteristics of pipes 13
5.2.4 Geometrical characteristics of fittings 14
5.3 Dimensions of manholes and inspection chambers 15
5.3.1 Manholes 15
5.3.2 Inspection chambers 16
5.3.3 Geometrical characteristics of manholes and inspection chambers 16
5.4 Covers and frames 16
5.5 Connection to the piping system and components 17
6 Performance requirements 17
6.1 General 17
6.2 Mechanical requirements of pipes and fittings 17
6.3 Mechanical requirements of shafts of manholes and inspection chambers 18
6.3.1 General 18
6.3.2 Circular sections 18
6.3.3 Other shapes 18
6.3.4 Tapers/cones, reducing and cover slabs 19
6.4 Tightness 19
6.4.1 Test pressure 19
6.4.2 Sealings for joints 20
6.4.3 Joint deflection 21
6.4.4 Joint shear load 21
6.4.5 Restrained joints 22
6.5 Continuity of invert 22
6.6 Temperature resistance 22
6.7 Dimensional stability 22
6.8 Smoothness of bore 23
6.9 Appearance 23
6.10 Chemical and corrosion resistance 23
6.11 Abrasion resistance 23
6.12 Coatings and linings 23
6.13 Durability 23
6.14 Resistance against cleaning operations 23
6.15 Handling 23
6.16 Reaction to fire 23
7 Test methods 23

Documents
Document Sharing Hub
Full document details: BS EN 476:2022

7.1 Measurement of dimensions 23
7.1.1 Internal diameter 23
7.1.2 External diameter 24
7.1.3 Spigots and sockets 24
7.1.4 Wall thickness of pipes 24
7.1.5 Deviation from straightness of pipes 24
7.1.6 Deviation from squareness of the ends of the pipes 24
7.2 Load bearing capacity tests 24
7.2.1 Load bearing capacity tests for pipes 24
7.2.2 Load bearing capacity tests for sections of manholes and shafts 25
7.3 Longitudinal bending moment resistance test for pipes 25
7.4 Tightness tests 26
7.4.1 Tightness test of pipes, fittings, manholes and inspection chambers 26
7.4.2 Tightness test of joints 27
7.4.3 Test methods for drains and sewers components 28

8 Marking, labelling and packaging 28

Annex A (informative) Preferred nominal sizes 29

Bibliography 30

Documents
Document Sharing Hub
Full document details: BS EN 476:2022

European foreword

This document (EN 476:2022) has been prepared by Technical Committee CEN/TC 165 “Waste water engineering”, the secretariat of which is held by DIN.

This European Standard shall be given the status of a national standard, either by publication of an identical text or by endorsement, at the latest by October 2022, and conflicting national standards shall be withdrawn at the latest by October 2022.

Attention is drawn to the possibility that some of the elements of this document may be the subject of patent rights. CEN shall not be held responsible for identifying any or all such patent rights.

This document supersedes EN 476:2011.

The specifications of this document are based on the requirements for wastewater systems specified in EN 752 and EN 12056 (all parts). Significant technical differences between this edition and EN 476:2011 are as follows:

a) the Scope is clarified in the way that this document contains requirements for product standards;

b) Table 1 (Preferred nominal sizes DN/ID) and Table 2 (Preferred nominal sizes DN/OD), paragraph 5.2.1, are moved to the new Annex A;

c) the paragraphs under 5.3, Dimensions of manholes and inspection chambers, are completely rewritten, with minimum internal dimension for different cross sections (always in compliance with the national regulations in force at the place of installation);

d) for reaction to fire, a new 6.16 is added.

This document provides a framework for the development of product standards to be used in drain and sewer systems inside and outside buildings. In Figure 1 the position of this document related to other standards on this subject is given.

This document describes the general requirements to be taken into account in product standards.

Any feedback and questions on this document should be directed to the users’ national standards body. A complete listing of these bodies can be found on the CEN website.

According to the CEN-CENELEC Internal Regulations, the national standards organisations of the following countries are bound to implement this European Standard: Austria, Belgium, Bulgaria, Croatia, Cyprus, Czech Republic, Denmark, Estonia, Finland, France, Germany, Greece, Hungary, Iceland, Ireland, Italy, Latvia, Lithuania, Luxembourg, Malta, Netherlands, Norway, Poland, Portugal, Republic of North Macedonia, Romania, Serbia, Slovakia, Slovenia, Spain, Sweden, Switzerland, Turkey and the United Kingdom.

Documents
Document Sharing Hub
Full document details: BS EN 476:2022

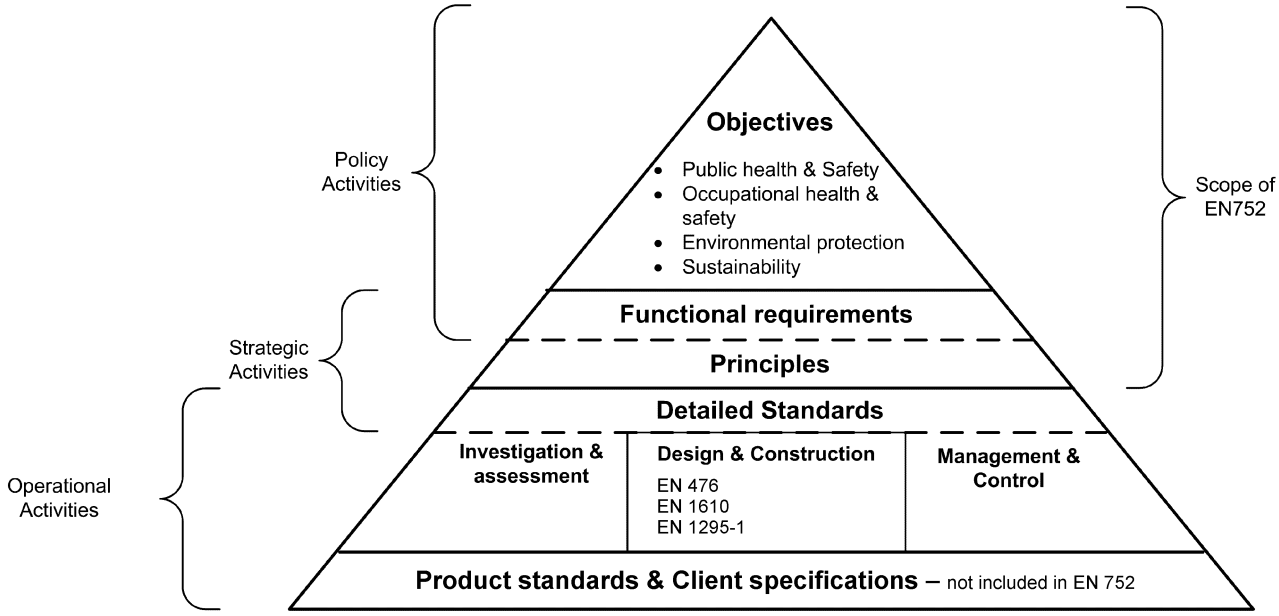

Figure 1 — Pyramid diagram

1 Scope

This document specifies general requirements to be respected in product standards for components such as pipes, fittings, inspection chambers and manholes with their respective joints intended for use in drains and sewers inside and outside buildings which operate as gravity systems allowing for a maximum pressure of 40 kPa.

It also specifies general requirements for components used in hydraulically and pneumatically pressurized pipes, drains and sewers.

NOTE 1 Where the term “inside buildings” is used in the context of components fixed inside buildings, it also includes pipes and fittings fixed on external surfaces of buildings.

NOTE 2 This document is not a product standard and therefore not intended for the direct evaluation of products.

This document covers components to be used in conveying in a satisfactory manner:

— domestic wastewater;

— rainwater and surface water;

— other wastewater acceptable for discharge into the system.

This document is applicable to components of circular and other cross sections.

This document is equally applicable to components which are factory-made and to those constructed on site, where applicable.

NOTE 3 This document does not apply to components used for trenchless construction according to EN 14457 and for components used for renovation of drains and sewers according to EN 13380.

This document does not supersede the functional requirements of a complete system as defined in EN 752.

AVA Documents
Document Sharing Hub

Full document details: BS EN 476:2022

2 Normative references

The following documents are referred to in the text in such a way that some or all of their content constitutes requirements of this document. For dated references, only the edition cited applies. For undated references, the latest edition of the referenced document (including any amendments) applies.

EN 124 (all parts), *Gully tops and manhole tops for vehicular and pedestrian areas*

EN 681-1, *Elastomeric seals - Materials requirements for pipe joint seals used in water and drainage applications - Part 1: Vulcanized rubber*

EN 681-2, *Elastomeric seals - Material requirements for pipe joint seals used in water and drainage applications - Part 2: Thermoplastic elastomers*

EN 681-3, *Elastomeric seals - Material requirements for pipe joint seals used in water and drainage applications - Part 3: Cellular materials of vulcanized rubber*

EN 681-4, *Elastomeric seals - Material requirements for pipe joint seals used in water and drainage applications - Part 4: Cast polyurethane sealing elements*

EN 13501-1, *Fire classification of construction products and building elements - Part 1: Classification using data from reaction to fire tests*

EN 13823, *Reaction to fire tests for building products - Building products excluding floorings exposed to the thermal attack by a single burning item*

EN 16000, *Plastics piping systems - Systems within the building structure - Mounting and fixing of components in the test apparatus to thermal attack by a single burning item*

EN ISO 9967, *Thermoplastics pipes - Determination of creep ratio (ISO 9967)*

EN ISO 9969, *Thermoplastics pipes - Determination of ring stiffness (ISO 9969)*

EN ISO 11925-2, *Reaction to fire tests - Ignitability of products subjected to direct impingement of flame - Part 2: Single-flame source test (ISO 11925-2)*

ISO 48-2, *Rubber, vulcanized or thermoplastic — Determination of hardness — Part 2: Hardness between 10 IRHD and 100 IRHD*

3 Terms and definitions

For the purposes of this document, the following terms and definitions are applicable.

ISO and IEC maintain terminological databases for use in standardization at the following addresses:

— ISO Online browsing platform: available at https://www.iso.org/obp/ui

— IEC Electropedia: available at https://www.electropedia.org/

3.1
crushing strength
load per unit length a rigid pipe is required to withstand in kN/m

Documents
Document Sharing Hub
Full document details: BS EN 476:2022

3.2
external diameter
mean external dimension of the circular pipe barrel at any cross section where for pipes with external profiles on the barrels, the external diameter is the maximum diameter when viewed in cross section

Note 1 to entry This definition can also be considered for other pipe shapes (e.g. egg shape).

3.3
flexible joint
joint which permits angular deflection

3.4
flexible pipe
pipe, the load carrying capacity of which is limited by diametral deformation under load to the ultimate design criteria without breaking or overstressing

Note 1 to entry: Flexible pipes are manufactured from materials such as PVC, PP, PE, steel, etc.

3.5
hydraulically pressurised system
system where flow is caused by hydraulic pressure and where the pipe normally operates full

3.6
inspection chamber
chamber with a removable cover constructed on a drain or sewer that permits the introduction of cleaning and inspection equipment from surface level, but does not provide access for personnel

[SOURCE: EN 16323:2014, 2.2.4.13]

Note 1 to entry: Examples are given in Figures 2 and 3.

Note 2 to entry: Terms may differentiate per type of material.

Documents
Document Sharing Hub
Full document details: BS EN 476:2022

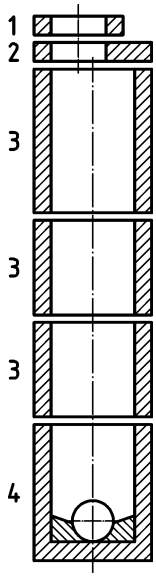

Key

1 adjusting unit
2 cover slab
3 shaft unit
4 base unit

NOTE Joint details have been omitted for clarity.

Figure 2 — Description of rigid inspection chamber components

Documents
Document Sharing Hub
Full document details: BS EN 476:2022

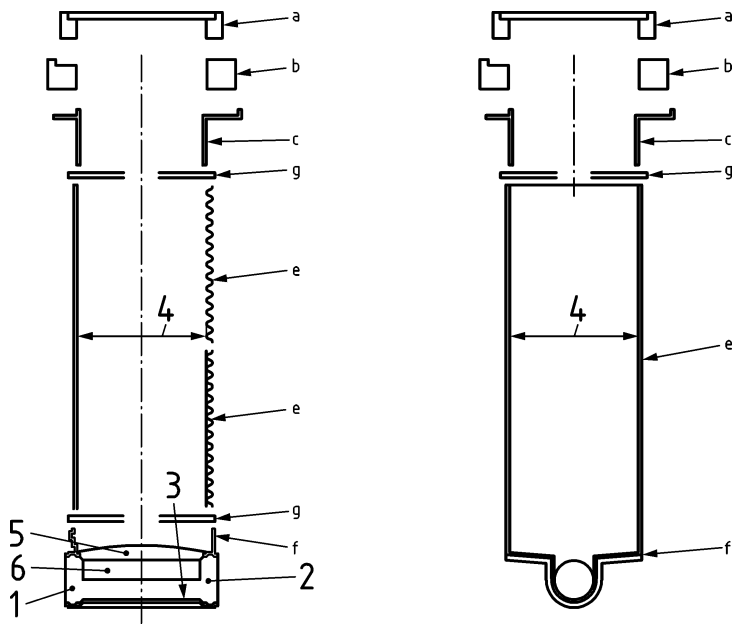

Key

a	cover	1	inlet
b	near surface component	2	outlet
c	telescopic adaptor	3	invert
e	riser	4	inner diameter
f	base	5	benching
g	connection	6	channel

Figure 3 — Description of flexible inspection chamber components

3.7
internal diameter
mean internal dimension of the circular pipe barrel at any cross section

3.8
invert
lowest point of the internal surface of the barrel of a pipe or channel at any cross section

3.9
joint
connection between the adjacent ends of two components including the means of sealing

3.10
manhole
chamber with a removable cover constructed on a drain or sewer to permit entry by personnel

[SOURCE: EN 16323:2014, 2.2.4.15]

Note 1 to entry: Examples are given in Figures 4 and 5.

Note 2 to entry: Terms may differentiate per type of material.

Documents
Document Sharing Hub

Full document details: BS EN 476:2022