BS EN 4888:2024

BSI Standards Publication

Aerospace Series — Commercial aircraft passenger seats — Reliability testing

Documents
Document Sharing Hub

Full document details: BS EN 4888:2024

National foreword

This British Standard is the UK implementation of EN 4888:2024.

The UK participation in its preparation was entrusted to Technical Committee ACE/1, International and European Aerospace Policy and Processes.

A list of organizations represented on this committee can be obtained on request to its committee manager.

Contractual and legal considerations

This publication has been prepared in good faith, however no representation, warranty, assurance or undertaking (express or implied) is or will be made, and no responsibility or liability is or will be accepted by BSI in relation to the adequacy, accuracy, completeness or reasonableness of this publication. All and any such responsibility and liability is expressly disclaimed to the full extent permitted by the law.

This publication is provided as is, and is to be used at the recipient's own risk.

The recipient is advised to consider seeking professional guidance with respect to its use of this publication.

This publication is not intended to constitute a contract. Users are responsible for its correct application.

© The British Standards Institution 2024
Published by BSI Standards Limited 2024

ISBN 978 0 539 24052 8

ICS 49.025.01; 49.025.01; 49.095; 49.095

Compliance with a British Standard cannot confer immunity from legal obligations.

This British Standard was published under the authority of the Standards Policy and Strategy Committee on 30 September 2024.

Amendments/corrigenda issued since publication

Date	Text affected

Documents
Document Sharing Hub

Full document details: BS EN 4888:2024

EUROPEAN STANDARD

NORME EUROPÉENNE

EUROPÄISCHE NORM

EN 4888

September 2024

ICS 49.095

English Version

Aerospace Series - Commercial aircraft passenger seats - Reliability testing

Série aérospatiale - Sièges passagers d'aéronefs commerciaux - Essais de fiabilité

Luft- und Raumfahrt - Fluggastsitze für die zivile Luftfahrt - Zuverlässigkeitsprüfung

This European Standard was approved by CEN on 22 April 2024.

CEN members are bound to comply with the CEN/CENELEC Internal Regulations which stipulate the conditions for giving this European Standard the status of a national standard without any alteration. Up-to-date lists and bibliographical references concerning such national standards may be obtained on application to the CEN-CENELEC Management Centre or to any CEN member.

This European Standard exists in three official versions (English, French, German). A version in any other language made by translation under the responsibility of a CEN member into its own language and notified to the CEN-CENELEC Management Centre has the same status as the official versions.

CEN members are the national standards bodies of Austria, Belgium, Bulgaria, Croatia, Cyprus, Czech Republic, Denmark, Estonia, Finland, France, Germany, Greece, Hungary, Iceland, Ireland, Italy, Latvia, Lithuania, Luxembourg, Malta, Netherlands, Norway, Poland, Portugal, Republic of North Macedonia, Romania, Serbia, Slovakia, Slovenia, Spain, Sweden, Switzerland, Türkiye and United Kingdom.

EUROPEAN COMMITTEE FOR STANDARDIZATION
COMITÉ EUROPÉEN DE NORMALISATION
EUROPÄISCHES KOMITEE FÜR NORMUNG

CEN-CENELEC Management Centre: Rue de la Science 23, B-1040 Brussels

© 2024 CEN All rights of exploitation in any form and by any means reserved worldwide for CEN national Members.

Ref. No. EN 4888:2024 E

Documents
Document Sharing Hub

Full document details: BS EN 4888:2024

Contents

Page

European foreword 5
Introduction 6
1 Scope 7
2 Normative references 7
3 Terms and definitions 7
4 Abbreviated terms 7
5 Reliability testing of aircraft sub-seat components 8
5.1 Failure behaviour 8
5.2 Reliability characteristics and their conversion 8
5.3 Aspect test cycle time versus flight time and range 9
5.4 Determination of reliability characteristics 10
5.5 Degradation 13
6 General test conditions 13
6.1 General 13
6.2 ATD 13
6.3 Loading devices 15
6.3.1 Loading device for applied loads 15
6.3.2 Loading device for impact 15
6.3.3 Loading device for literature pockets 16
6.3.4 Loading device for backrest 16
6.3.5 Loading device for seat pan 17
7 Reliability testing of backrest 18
7.1 Test requirements 18
7.2 Test procedure 20
7.2.1 General 20
7.2.2 Test procedure for load case A 20
7.2.3 General note for test procedure for load case B to H 21
7.2.4 Test procedure for load case B 21
7.2.5 Test procedure for load case C and D 22
7.2.6 Test procedure for load case E 23
7.2.7 Test procedure for load case F 24
7.2.8 Test procedure for load case G 25
7.2.9 Test procedure for load case H 26

Documents
Document Sharing Hub
Full document details: BS EN 4888:2024

7.3 Failure criteria ... 27
8 Reliability testing of moveable headrest ... 28
8.1 Test requirements ... 28
8.2 Test procedure ... 29
8.2.1 Test procedure for load case A ... 29
8.2.2 Test procedure for load case B ... 30
8.2.3 Test procedure for load case C ... 31
8.2.4 Test procedure for load case D1 and D2 ... 31
8.2.5 Test procedure for load case E ... 33
8.2.6 Test procedure for load case F ... 33
8.3 Failure criteria ... 34
9 Reliability testing of armrest ... 34
9.1 Test requirements ... 34
9.2 Test procedure ... 36
9.2.1 Test procedure for load case A ... 36
9.2.2 Test procedure for load case B ... 36
9.2.3 Test procedure for load case C ... 37
9.2.4 Test procedure for load case D ... 38
9.2.5 Test procedure for load case E ... 39
9.2.6 Test procedure for load case F ... 39
9.2.7 Test procedure for load case G ... 40
9.2.8 Test procedure for load case H ... 40
9.2.9 Test procedure for load case I ... 41
9.2.10 Test procedure for load case J ... 42
9.3 Failure criteria ... 43
10 Reliability testing of table ... 44
10.1 Test requirements ... 44
10.2 Test procedure ... 45
10.2.1 General ... 45
10.2.2 Test procedure for load case C ... 47
10.2.3 Test procedure for load case D ... 48
10.3 Failure criteria ... 49
11 Reliability testing of literature pocket ... 49
11.1 Test requirements ... 49
11.2 Test procedure ... 50
11.2.1 Test procedure for load case A ... 50

Documents
Document Sharing Hub

Full document details: BS EN 4888:2024

11.2.2 Test procedure for load case B 51
11.3 Failure criteria 51
Annex A (informative) Random failure behaviour rate 53
Bibliography 54

Documents
Document Sharing Hub
Full document details: BS EN 4888:2024

European foreword

This document (EN 4888:2024) has been prepared by the ASD-STAN.

After enquiries and votes carried out in accordance with the rules of this Association, this document has received the approval of the National Associations and the Official Services of the member countries of ASD-STAN, prior to its presentation to CEN.

This European Standard shall be given the status of a national standard, either by publication of an identical text or by endorsement, at the latest by March 2025, and conflicting national standards shall be withdrawn at the latest by March 2025.

Attention is drawn to the possibility that some of the elements of this document may be the subject of patent rights. CEN shall not be held responsible for identifying any or all such patent rights.

Any feedback and questions on this document should be directed to the users' national standards body. A complete listing of these bodies can be found on the CEN website.

According to the CEN-CENELEC Internal Regulations, the national standards organizations of the following countries are bound to implement this European Standard: Austria, Belgium, Bulgaria, Croatia, Cyprus, Czech Republic, Denmark, Estonia, Finland, France, Germany, Greece, Hungary, Iceland, Ireland, Italy, Latvia, Lithuania, Luxembourg, Malta, Netherlands, Norway, Poland, Portugal, Republic of North Macedonia, Romania, Serbia, Slovakia, Slovenia, Spain, Sweden, Switzerland, Türkiye and the United Kingdom.

AVA Documents
Document Sharing Hub

Full document details: BS EN 4888:2024

Introduction

A well-organized reliability management process is very important for manufacturers in order to achieve the reliability requirements set by the customers and to continuously maintain market position. The prediction of the failure behaviour of a product in the field should be accomplished as early as possible. An optimized reliability management process contains qualitative and quantitative reliability methods based on fatigue damage calculations, test data, condition monitoring, field failure data and warranty cost analysis, which have to be fused to a closed loop failure analysis system in order to consider all lessons learned in the analysis tools used in product development.

Customers expect a reasonably priced product, which has a high level of quality and reliability at the same time.

The determination of the reliability of products is an essential component in the development and manufacture of products. The reliability of these technical products describes the property of not failing within a specified time period and to keep the failure rate at an acceptable level until the end of life in given functional and ambient conditions.

The reliability and its characteristics are described via the confidence level and confidence range. An important contribution concerns the analysis of service life information resulting from corresponding tests or reported from the service by customers.

Reliability testing involves the definition, implementation and analysis of tests that are to represent the use of seats in aircraft.

Furthermore, the second largest task of reliability testing involves analysing field data provided as feedback from airlines. In this way, the data is validated based on previously conducted tests and prognoses for future seat models are compiled.

Documents
Document Sharing Hub
Full document details: BS EN 4888:2024

1 Scope

This document specifies minimum reliability test requirements for sub-components of commercial aircraft passenger seats. Test procedures including in-service load cases regarding passenger behaviour for sub-seat components are specified. Abuse loads are excluded. This document is applicable to the sub-seat components such as but not limited to backrest, headrest, armrest, table, literature pocket and control elements.

This document does not apply to belts, Inflight-Entertainment, seat dress cover and cushions.

Additional environmental influences like temperature, radiation, gases and liquids may also alter the reliability of the aircraft passenger seats and their sub-components over their lifetime but are not taken into consideration in this document.

Tests on abrasion and surface durability are specified in EN 4860, EN 4864 and EN 4876.

2 Normative references

The following documents are referred to in the text in such a way that some or all of their content constitutes requirements of this document. For dated references, only the edition cited applies. For undated references, the latest edition of the referenced document (including any amendments) applies.

EN 1728:2012/AC:2013, *Furniture — Seating — Test methods for the determination of strength and durability*

SAE J826,[1] *Devices for Use in Defining and Measuring Vehicle Seating Accommodation*

3 Terms and definitions

For the purposes of this document, the following terms and definitions apply.

ISO and IEC maintain terminology databases for use in standardization at the following addresses:

— ISO Online browsing platform: available at https://www.iso.org/obp

— IEC Electropedia: available at https://www.electropedia.org/

3.1
reliability
probability that a product will not fail during specified time period under given functional and environmental conditions

4 Abbreviated terms

For the purposes of this document, the following abbreviated terms apply.

A/C	aircraft
ATD	anthropomorphic testing device
CTR	centre
DWD	downward

[1] Published by: SAE International (US) https://www.sae.org/.

Documents
Document Sharing Hub
Full document details: BS EN 4888:2024

FOLD-EXT	fold extant
FC	flight cycle
FH	flight hour
FWD	forward
LAP	load attack point
LH	left hand
LR	long range flight
MTBF	mean time between failure
MTBUR	mean time between unexpected/unscheduled repair/removal
MTTF	mean time to failure
RH	right hand
RWD	rearward
SR	short range flight
SWD	sideward
TTL	taxi – take off – landing
UWD	upward

5 Reliability testing of aircraft sub-seat components

5.1 Failure behaviour

The failure behaviour of a product is recorded by the reliability and is, additionally to the functional properties, an essential criterion for the product assessment.

Decorative material is to be interpreted as a cosmetic addition to the substrate materials functionality.

During the tests, occurrence of defects will be separated in three different categories:

a) minor: defects or cosmetic findings, which have no or only a minor effect on the functionality of the seat or a component and may be repaired or exchanged easily if necessary; depending on the occurrence, these defects may be considered for the MTBF evaluation; test will be continued;

b) major: defects which have a direct effect on the functionality of the seat or a component; these defects will be considered for the MTBF evaluation; test has to be stopped;

c) safety: defects which have a direct effect on the safety of an occupant, these defects will be considered for the MTBF evaluation. The test shall be stopped and a safety evaluation shall be done.

5.2 Reliability characteristics and their conversion

The following reliability characteristics are usually taken as a basis from the customer viewpoint:

a) in case of non-maintainable units: mean time to failure (MTTF);

b) in case of maintainable units: mean time between failure (MTBF);

c) mean time between unexpected/unscheduled repair/removal (MTBUR).

Documents
Document Sharing Hub
Full document details: BS EN 4888:2024

These values are usually given in flight hours (FH) and shall be converted for the tests in the load spectrum. Assuming that a load spectrum corresponds to the use of the component during a flight cycle (FC), it is necessary to determine how many flight cycles an aircraft undergoes during the given MTBF time in flight hours.

This results from multiplication of the requirement in flight hours by the ratio of flight cycles per flight hour:

$$\mathrm{MTBF}_{\text{Load collective}} = \mathrm{MTBF}_{\mathrm{FH}} \cdot \frac{\mathrm{FC}_{\mathrm{day}}}{\mathrm{FH}_{\mathrm{day}}} \tag{1}$$

where

$\mathrm{MTBF}_{\text{Load collective}}$	is the mean time to failure load collective;
$\mathrm{MTBF}_{\mathrm{FH}}$	is the mean time to failure in flight hour (h);
$\mathrm{FC}_{\mathrm{day}}$	is the flight cycle per day;
$\mathrm{FH}_{\mathrm{day}}$	is the flight hour per day (h).

The MTBF values determined from tests are converted into flight hours by transposing the equation according to $\mathrm{MTBF}_{\mathrm{FH}}$:

$$\mathrm{MTBF}_{\mathrm{FH}} = \mathrm{MTBF}_{\text{Load collective}} \cdot \frac{\mathrm{FH}_{\mathrm{day}}}{\mathrm{FC}_{\mathrm{day}}} \tag{2}$$

where

$\mathrm{MTBF}_{\mathrm{FH}}$	is the mean time to failure per flight hour (h);
$\mathrm{MTBF}_{\text{Load collective}}$	is the mean time to failure load collective;
$\mathrm{FC}_{\mathrm{day}}$	is the flight cycle per day;
$\mathrm{FH}_{\mathrm{day}}$	is the flight hour per day (h).

Failure and degradation parameters are specified in each individual testing criteria.

5.3 Aspect test cycle time versus flight time and range

To specify scenarios, representing the daily usage of aircraft sub-seat components, different types of commercial aircraft shall be considered. Single aisle aircraft mainly used for short and medium-range flights and twin aisle aircraft used for mid-, long- and ultra-long range flights. As the flight hours per flight cycle ratio differs between these two categories of commercial aircraft, different load scenarios, occurring during one flight (e.g. repetition of a specified load case per flight), shall be considered.

As a minimum utilization of the aircraft, the data from Table 1 shall be used for the transformation of MTBF values from load collectives into flight hours and vice versa according to 5.2. Deviation from these values shall be justified by statistical data.

Table 1 — Data for short range and long range

Type of flight mission	Value
Short range	
Average flight duration	1,5 h
Average daily utilization	8,5 h

Documents
Document Sharing Hub
Full document details: BS EN 4888:2024

Type of flight mission	Value
Average flight cycles per day	5,8
Long range	
Average flight duration	8,0 h
Average daily utilization	13,0 h
Average flight cycles per day	1,6

5.4 Determination of reliability characteristics

The systematic failure behaviour rate, i.e. failure rate shall be calculated according to Formula (3).

$$\lambda(t) = \frac{\beta}{T} \cdot \left(\frac{t}{T}\right)^{\beta-1} \tag{3}$$

where

$\lambda(t)$ is the failure rate (per load collative);

T is the characteristic lifetime (number of load collectives);

t is the running time (number of load collectives);

β is the Weibull shape parameter.

The MTTF can be calculated according to Formula (4).

$$\text{MTTF} = T \cdot \Gamma\left(\frac{1}{\beta} + 1\right) \tag{4}$$

where

MTTF is the mean time to failure (number of load collectives);

T is the characteristic lifetime (number of load collectives);

t is the running time (number of load collectives);

β is the Weibull shape parameter;

Γ is the Gamma function.

Documents
Document Sharing Hub
Full document details: BS EN 4888:2024

If the characteristic lifetime T is unknown, it can be calculated according to Formula (5).

$$T = \left(\sum_{i=1}^{n} \frac{t_i^{\beta}}{x} \right)^{\frac{1}{\beta}} \tag{5}$$

where

T is the characteristic lifetime (number of load collectives);

t_i is the running time of each test (number of load collectives);

β is the Weibull shape parameter;

x is the number of failures found;

n is the number of samples.

The MTTF can then be calculated according to Formula (6).

$$\text{MTTF} = \left(\sum_{i=1}^{n} \frac{t_i^{\beta}}{x} \right)^{\frac{1}{\beta}} \cdot \Gamma\left(\frac{1}{\beta} + 1 \right) \tag{6}$$

where

MTTF is the mean time to failure (number of load collectives);

t_i is the running time for sample i (number of load collectives);

β is the Weibull shape parameter;

x is the number of failures found;

n is the number of samples;

Γ is the Gamma function.

Typical Weibull shape parameters for different materials are shown in Table 2 and shall be used.

Table 2 — Typical Weibull shape parameters

Material	Weibull shape parameter β
Aluminium alloys (2024/3.1355), (7075/3.4365)	4,0
Titanium alloys (Ti6Al4V/3.7164)	3,0
Steel ($R_m \leq 1\,655$ MPa)	3,0
Steel ($R_m > 1\,655$ MPa)	2,2

For other materials an estimation of the shape parameters should be compared to fixed values and if no other proven data are available a conservative choice should be selected by using a Weibull shape parameter of $\beta \geq 2{,}2$.

The method in 5.4 is representing non-random failure behaviour and is therefore more accurate as the simplified method shown in Annex A.

EXAMPLE 1 Five aluminium armrests ($\beta = 4$) of a long range seat were tested according to loads given in Clause 8 until occurrence of a failure. The results of these 5 tests are shown in Table 3.

AVA Documents
Document Sharing Hub

Full document details: BS EN 4888:2024

Table 3 — Example test results

Repetition	Running time (load collectives)	Findings
1	5 961	Armrest structure cracked
2	2 761	
3	3 301	
4	4 536	
5	3 305	

$$\mathrm{MTTF} = \left(\frac{5961^4 + 2761^4 + 3301^4 + 4536^4 + 3305^4}{5}\right)^{\frac{1}{4}} \times \Gamma\left(\frac{1}{4}+1\right) = 4462 \times 0{,}9064 = 4044 \text{ load collectives}$$

According to 5.2, 4 044 load collectives at a long range seat are representing a MTTF of 32 350 flight hours.

It may happen, that after a reasonable time, no failure will be found and the test is stopped. In this case the method above cannot be used for the evaluation.

If no failure is found, only statistical minimum values can be determined with the formulas below:

$$\mathrm{MTTF}_{\min} = T_{\min} \cdot \Gamma\left(\frac{1}{\beta}+1\right) \tag{7}$$

where

$\mathrm{MTTF}_{\min}$ is the minimum mean time to failure (number of load collectives);

T is the characteristic lifetime (number of load collectives);

β is the Weibull shape parameter;

Γ is the Gamma function.

with

$$T_{\min} = \left(\frac{2 * \sum_{i=1}^{n} t_i^{\beta}}{\mathrm{X}^2_{2(x+1);1-\frac{\alpha}{2}}}\right)^{\frac{1}{\beta}} \tag{8}$$

where

$T_{\min}$ is the minimum characteristic lifetime (number of load collectives);

t_i is the running time of each test (number of load collectives);

β is the Weibull shape parameter;

x is the number of failures found;

X^2 is the Chi-Square distribution;

Documents
Document Sharing Hub
Full document details: BS EN 4888:2024

α is the statistical level of significance (1 % to 99 %).

EXAMPLE 2 The armrest from the example above was improved and tested again. Each test was stopped after 6 000 load collectives equals 48 000 flight hours equals 10 years without any failure.

$$\mathrm{MTTF}_{\min} = \left(\frac{2 \times (6000^4 + 6000^4 + 6000^4 + 6000^4 + 6000^4)}{\mathrm{X}^2_{2(0+1);1-\frac{0,5}{2}}} \right)^{\frac{1}{4}} \times \Gamma\left(\frac{1}{4}+1\right) = 8913 \text{ load collectives}$$

According to 5.2, 8 913 load collectives at a long range seat are representing a $\mathrm{MTTF}_{\min}$ of 71 300 flight hours.

5.5 Degradation

This document only covers mechanical wear and tear on new parts. Degradation due to environmental influences e.g. chemical ageing of plastic parts is not part of the scope of this document and neither shall it be applied on anything other than new parts.

6 General test conditions

6.1 General

All sub seat components should be tested with the pertinent seat. Any sub seat components not pertinent to the relevant load paths do not need to be installed.

If the seat is used for the test, the seat shall be fixed via seat tracks or equivalent fixation to the test bench.

Unless otherwise specified, the seat shall be stored in indoor ambient conditions for at least 24 h immediately prior testing.

The test shall be carried out at indoor ambient conditions with a temperature of 23 °C ± 10 °C and should be carried out with a relative humidity of 50 % ± 20 %.

Applied loading shall be maintained for at least 0,5 s.

After initial calibration of test equipment the equipment shall be kept in good working order to maintain pertinent test results.

The following tolerances shall be used for the tests including the ATD in 6.2 and loading devices in 6.3:

a) forces: ± 1 % of the nominal force for 100 N and above; ± 5 % of the nominal force below 100 N;

b) velocities: 0 % to 5 % of the nominal velocity;

c) masses: ± 1 % of the nominal mass;

d) dimensions: ± 3 mm of the nominal dimensions;

e) angles: ± 2° of the nominal angle.

The speed for cycle testing shall not be higher than 3 600 cycles per hour.

6.2 ATD

An ATD according to SAE J826 shall be used for the following test in this document.

AVA Documents
Document Sharing Hub

Full document details: BS EN 4888:2024

The ATD device shall be representing the human body. Therefore, the dimensions and weights of the different body parts shall be representative.

Table 4 shows the weight distribution for a standard Hybrid III crash test dummy and the 90 kg ATD device which shall be used for testing. The values for the 90 kg test device are interpolated between the 77,7 kg (50 %il) and the 101,2 kg (95 %il) values.

Table 4 — Weight distribution for a standard Hybrid III crash test dummy and the 90 kg ATD device

Body segments	50 %il kg	90 kg ATD kg	95 %il kg
Head	4,54	4,75	4,94
Neck	1,54	1,61	1,68
Upper torso	17,19	19,85	22,27
Lower torso	23,04	26,84	30,3
Upper arm, left or right	2	2,42	2,81
Hands, left or right	0,57	0,57	0,57
Lower arms, left or right	1,7	1,89	2,06
Upper leg, left or right	5,99	7,15	8,21
Lower legs left or right	4,29	5,05	5,75
Feet, left or right	1,16	1,39	1,59
Sum	77,7	90,00	101,2

If some of the body parts are not existing (e.g. arms, hand, feet) or not separated (e.g. upper and lower torso) the weights shall to be added to the parts where the missing parts are normally attached or two parts have to be combined into one body part.

EXAMPLE The ATD according to SAE J826 has only upper body parts, a lower body part, lower and upper legs and feet. So, the weight of the upper and lower torso has to be combined in the upper part and also the weight of the head, neck, arms and hands have to be added to the weight of the combined upper and lower torso.

The weight shall be evenly distributed over all of the body parts.

For dimensions of the body parts refer to Figure 1.

Documents
Document Sharing Hub
Full document details: BS EN 4888:2024

Dimensions in mm

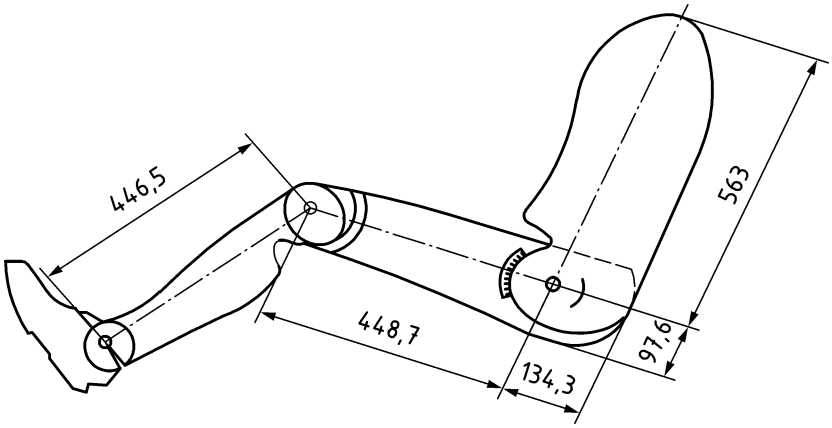

Figure 1 — Dimensions of ATD body parts

6.3 Loading devices

6.3.1 Loading device for applied loads

If possible a loading device according to Figure 2 should be used for the test in this document. The loading device should consists of a circular rigid pad with a maximum diameter of 100 mm (edge radius 10 mm). It can be used together with a strap in some cases.

Dimensions in mm

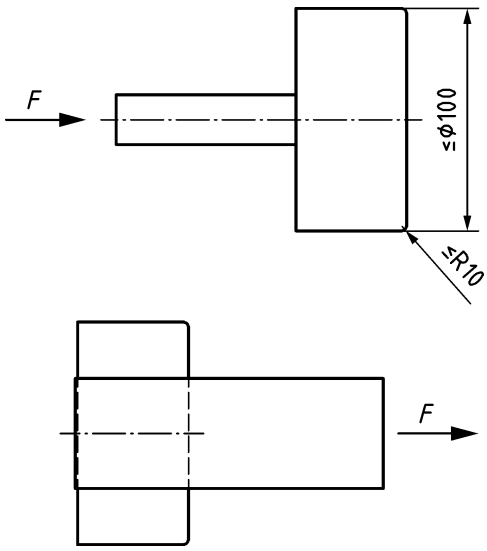

Key

F force

Figure 2 — Loading device for applied loads

6.3.2 Loading device for impact

A 9 kg rigid jig specified in Figure 3 made of metal or plastic, of equal weight distribution with a maximum radius of 20 mm at each edge shall be used.

Documents
Document Sharing Hub

Full document details: BS EN 4888:2024

Dimensions in mm

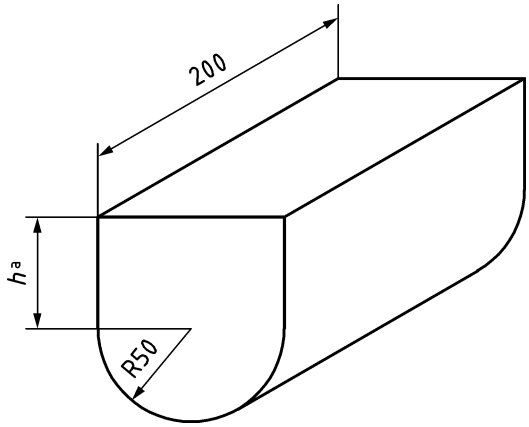

Key

[a] Height depends of material to reach 9 kg.

Figure 3 — Loading device for impact load

6.3.3 Loading device for literature pockets

A loading device as specified in Figure 4 shall be used for testing of the lower literature pocket.

Dimensions in mm

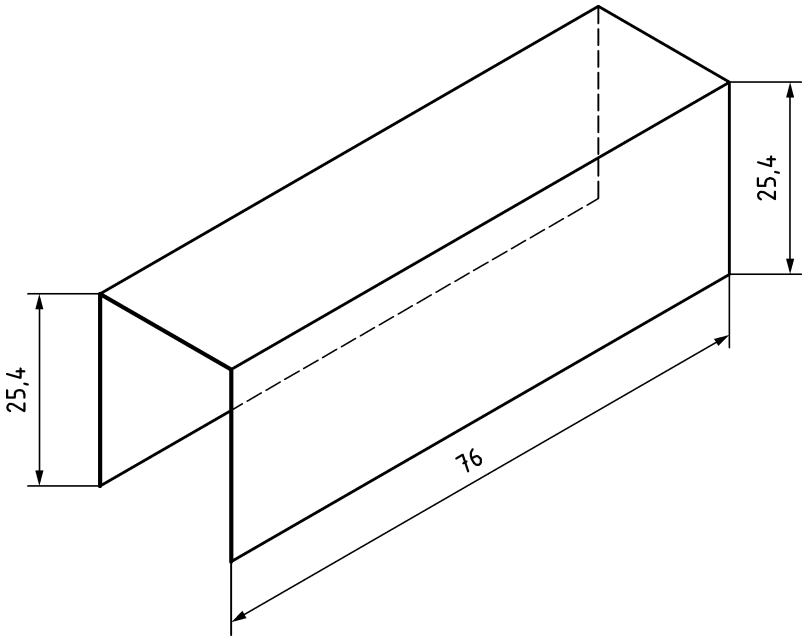

Figure 4 — Loading device for literature pockets

6.3.4 Loading device for backrest

A loading device as specified in Figure 5, can be used instead of the ATD for testing of the backrest.

Documents
Document Sharing Hub
Full document details: BS EN 4888:2024