BS EN 50377-13-2:2011

BSI Standards Publication

Connector sets and interconnect components to be used in optical fibre communication systems — Product specifications

Part 13-2: Type LX.5-PC DUPLEX terminated on IEC 60793-2-50 category B1.1 and B1.3 singlemode fibre, with full zirconia ferrule category U

NO COPYING WITHOUT BSI PERMISSION EXCEPT AS PERMITTED BY COPYRIGHT LAW

raising standards worldwide™

Full document details: BS EN 50377-13-2:2011

National foreword

This British Standard is the UK implementation of EN 50377-13-2:2011.

The UK participation in its preparation was entrusted to Technical Committee GEL/86/2, Fibre optic interconnecting devices and passive components.

A list of organizations represented on this committee can be obtained on request to its secretary.

This publication does not purport to include all the necessary provisions of a contract. Users are responsible for its correct application.

© BSI 2011

ISBN 978 0 580 64517 4

ICS 33.180.20

Compliance with a British Standard cannot confer immunity from legal obligations.

This British Standard was published under the authority of the Standards Policy and Strategy Committee on 30 April 2011.

Amendments issued since publication

Date	Text affected

Documents
Document Sharing Hub

Full document details: BS EN 50377-13-2:2011

EUROPEAN STANDARD

NORME EUROPÉENNE

EUROPÄISCHE NORM

EN 50377-13-2

March 2011

ICS 33.180.20

English version

Connector sets and interconnect components to be used in optical fibre communication systems - Product specifications - Part 13-2: Type LX.5-PC DUPLEX terminated on IEC 60793-2-50 category B1.1 and B1.3 singlemode fibre, with full zirconia ferrule category U

Jeux de connecteurs et composants d'interconnexion à utiliser dans les systèmes de communication par fibres optiques - Spécifications de produits - Partie 13-2: Type LX.5-PC duplex raccordé sur des fibres unimodales de catégorie B1.1 et B1.3 de la CEI 60793-2-50, avec férule en zircone plein de catégorie U

Steckverbindersätze und Verbindungselemente für Lichtwellenleiter-Datenübertragungssysteme - Produktnormen - Teil 13-2: Bauart LX.5-PC-Duplex zum Anschluss an Einmodenfasern der Kategorien B1.1 und B1.3 nach IEC 60793-2-50 mit Zirkonium-Ferrule für die Kategorie U

This European Standard was approved by CENELEC on 2011-01-02. CENELEC members are bound to comply with the CEN/CENELEC Internal Regulations which stipulate the conditions for giving this European Standard the status of a national standard without any alteration.

Up-to-date lists and bibliographical references concerning such national standards may be obtained on application to the Central Secretariat or to any CENELEC member.

This European Standard exists in three official versions (English, French, German). A version in any other language made by translation under the responsibility of a CENELEC member into its own language and notified to the Central Secretariat has the same status as the official versions.

CENELEC members are the national electrotechnical committees of Austria, Belgium, Bulgaria, Croatia, Cyprus, the Czech Republic, Denmark, Estonia, Finland, France, Germany, Greece, Hungary, Iceland, Ireland, Italy, Latvia, Lithuania, Luxembourg, Malta, the Netherlands, Norway, Poland, Portugal, Romania, Slovakia, Slovenia, Spain, Sweden, Switzerland and the United Kingdom.

CENELEC

European Committee for Electrotechnical Standardization
Comité Européen de Normalisation Electrotechnique
Europäisches Komitee für Elektrotechnische Normung

Management Centre: Avenue Marnix 17, B - 1000 Brussels

© 2011 CENELEC - All rights of exploitation in any form and by any means reserved worldwide for CENELEC members.

Ref. No. EN 50377-13-2:2011 E

AVA Documents
Document Sharing Hub

Full document details: BS EN 50377-13-2:2011

Foreword

This European Standard was prepared by the Technical Committee CENELEC TC 86BXA, Fibre optic interconnect, passive and connectorised components.

The text of the draft was submitted to the formal vote and was approved by CENELEC as EN 50377-13-2 on 2011-01-02.

Attention is drawn to the possibility that some of the elements of this document may be the subject of patent rights. CEN and CENELEC shall not be held responsible for identifying any or all such patent rights.

The following dates were fixed:

– latest date by which the EN has to be implemented at national level by publication of an identical national standard or by endorsement	(dop)	2012-01-02
– latest date by which the national standards conflicting with the EN have to be withdrawn	(dow)	2014-01-02

Documents
Document Sharing Hub
Full document details: BS EN 50377-13-2:2011

Connector sets and interconnect components to be used in optical fibre communication systems – Product specifications

Part 13-2: Type LX.5-PC DUPLEX terminated on IEC 60793-2-50 category B1.1 and B1.3 singlemode fibre, with full zirconia ferrule category U

Description		Performance	
Coupling mechanism:	Latched push-pull	Application:	For use in EN category U (Uncontrolled environment)
Configuration:	Plug/adaptor/plug	Attenuation grades: (random mate)	B: ≤ 0,12 dB mean ≤ 0,25 dB for > 97 % of measurements
Fibre category:	EN 60793-2-50, Types B1.1 and B1.3		C: ≤ 0,25 dB mean ≤ 0,50 dB for > 97 % of measurements
Cable type:	see Table 3	Return loss grades:	2: ≥ 45 dB

Related documents:

EN 60794-2, *Optical fibre cables – Part 2: Indoor cables – Sectional specification* (IEC 60794-2)

EN 61300 series, *Fibre optic interconnecting devices and passive components – Basic test and measurement procedures* (IEC 61300 series)

EN 61753-1, *Fibre optic interconnecting devices and passive components performance standard – Part 1: General and guidance for performance standards* (IEC 61753-1)

EN 61754-23, *Fibre optic connector interfaces – Part 23: Type LX.5 connector family* (IEC 61754-23)

EN 61755-1, *Fibre optic connector optical interfaces – Part 1: Optical interfaces for single mode non-dispersion shifted fibres – General and guidance* (IEC 61755-1)

EN 61755-3-1, *Fibre optic connector optical interfaces – Part 3-1: Optical interface, 2,5 mm and 1,25 mm diameter cylindrical full zirconia PC ferrule, single mode fibre* (IEC 61755-3-1)

ETSI TS 100 671, *Transmission and Multiplexing (TM); Passive optical components; Optical fibre connectors for single mode optical fibre communication systems; Common requirements and conformance testing*

Outline and maximum dimensions:

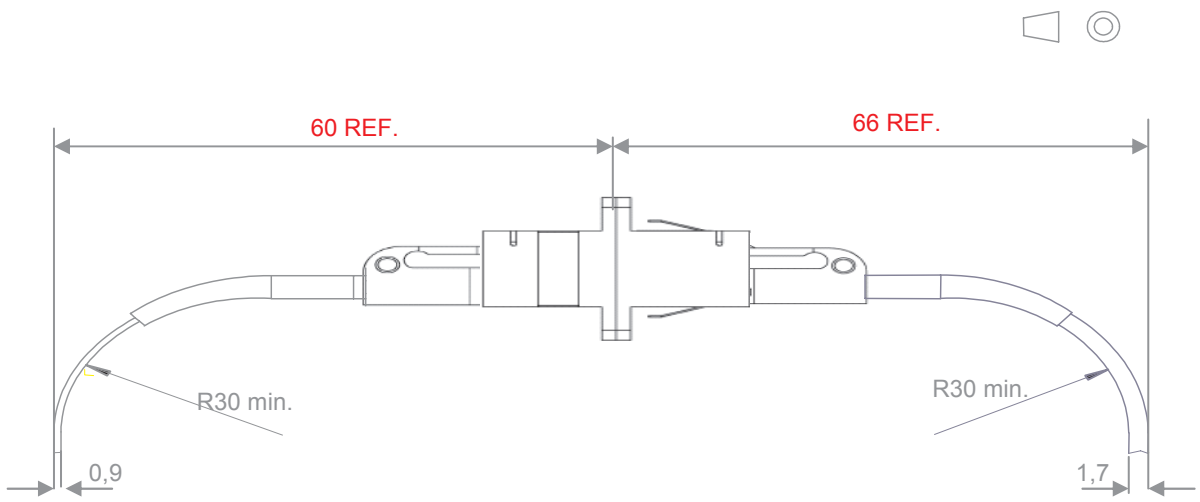

Documents
Document Sharing Hub

Full document details: BS EN 50377-13-2:2011

Contents

1 Scope ... 6
1.1 Product definition ... 6
1.2 Intermateability ... 6
1.3 Operating environment ... 6
1.4 Reliability ... 6
1.5 Quality assurance ... 6
2 Normative references ... 7
3 Description ... 8
3.1 General ... 8
3.2 Plug ... 8
3.3 Duplex adaptor ... 8
3.4 Materials ... 8
3.5 Dimensions ... 8
3.6 Colour and marking ... 8
4 Variants ... 9
4.1 Terminated plug ... 9
4.2 Adaptor ... 10
5 Dimensional requirements ... 10
5.1 Outline dimensions ... 10
5.2 Mating face and other limit dimensions ... 12
6 Tests ... 24
6.1 Sample size ... 24
6.2 Test and measurement methods ... 25
6.3 Test sequence ... 25
6.4 Pass/fail criteria ... 25
7 Test report ... 25
8 Performance requirements ... 25
8.1 Dimensional and marking requirements ... 25
8.2 Optical performance requirements ... 26
8.3 Mechanical performance requirements ... 28
8.4 Environmental performance requirements ... 33
Annex A (informative) Attenuation against reference ... 35
Annex B (normative) Adaptor matched reference plug details ... 36
Annex C (normative) Sample size and product sourcing requirements ... 37
Annex D (informative) Zirconia ferrule response surface ... 38
Bibliography ... 39

Documents
Document Sharing Hub
Full document details: BS EN 50377-13-2:2011

Figures

Figure 1 – Outline dimensions – Plug 11
Figure 2 – Outline dimensions – Duplex adaptor 12
Figure 3 – Mating face and other limit dimensions of plug connector interface 13
Figure 4 – Ferrule end face geometry – After termination 16
Figure 5 – Positioning of fibre core 16
Figure 6 – Ferrule end face geometry – Allowable undercut 18
Figure 7 – Requirements for the attenuation grades for the plug fibre core connected to the ideal reference 19
Figure 8 – Adaptor mating face and other limit dimensions 20
Figure 9 – Pin gauge for adaptor 24
Figure D.1 – Radius vs. undercut and apex offset 38

Tables

Table 1 – Ensured level of random attenuation 6
Table 2 – Preferred colour scheme 9
Table 3 – Plug variants 9
Table 4 – Adaptor variants 10
Table 5 – Geometrical parameters 17
Table 6 – Optical performance requirements 26
Table 7 – Mechanical performance requirements 28
Table 8 – Environmental performance requirements 33
Table A.1 35
Table A.2 – Reference connector details 35
Table B.1 36
Table C.1 37

Documents
Document Sharing Hub
Full document details: BS EN 50377-13-2:2011

1 Scope

1.1 Product definition

This European Standard contains the initial, start of life dimensional, optical, mechanical and environmental performance requirements which a terminated and assembled singlemode resilient alignment sleeve LX.5 PC connector set (plug/ adaptor/ plug) should meet in order for it to be categorised as an EN standard product.

Since different variants and grades of performance are permitted, product marking details are given in 3.6.

1.2 Intermateability

Although all products conforming to the requirements of this European Standard will intermate, the resulting level of random attenuation performance will only be ensured in accordance with Table 1. The intention is that this will be true irrespective of the manufacturing source(s) of the product.

When intermating plug variants having different attenuation grades, the resulting level of attenuation cannot be assured to be any better than the worst attenuation grade.

The intermating of a grade C plug with a grade B plug will result in an uncertain level of random attenuation performance.

Table 1 – Ensured level of random attenuation

Plug attenuation grade	C	B
C	C	C
B	C	B

1.3 Operating environment

The tests selected combined with the severities and durations are representative of a category U environment described in EN 61753-1.

1.4 Reliability

Whilst the anticipated service life expectancy of the product in this environment is 20 years, compliance with this specification does not guarantee the reliability of the product. This should be predicted using a recognised reliability assessment programme.

1.5 Quality assurance

Compliance with this specification does not guarantee the manufacturing consistency of the product. This should be maintained using a recognised quality assurance programme.

Documents
Document Sharing Hub
Full document details: BS EN 50377-13-2:2011

2 Normative references

The following referenced documents are indispensable for the application of this document. For dated references, only the edition cited applies. For undated references, the latest edition of the referenced document (including any amendments) applies.

EN 60793-2-50	Optical fibres – Part 2-50: Product specifications – Sectional specification for class B single-mode fibres (IEC 60793-2-50)
EN 61300 (series)	Fibre optic interconnecting devices and passive components – Basic test and measurement procedures (IEC 61300 series)
EN 61300-2-1	Part 2-1: Tests – Vibration (sinusoidal) (IEC 61300-2-1)
EN 61300-2-2	Part 2-2: Tests – Mating durability (IEC 61300-2-2)
EN 61300-2-4	Part 2-4: Tests – Fibre/cable retention (IEC 61300-2-4)
EN 61300-2-5	Part 2-5: Tests – Torsion/twist (IEC 61300-2-5)
EN 61300-2-6	Part 2-6: Tests – Tensile strength of coupling mechanism (IEC 61300-2-6)
EN 61300-2-7	Part 2-7: Tests – Bending moment (IEC 61300-2-7)
EN 61300-2-12:2009	Part 2-12: Tests – Impact (IEC 61300-2-12:2009)
EN 61300-2-17	Part 2-17: Tests – Cold (IEC 61300-2-17)
EN 61300-2-18	Part 2-18: Tests – Dry heat – High temperature endurance (IEC 61300-2-18)
EN 61300-2-22	Part 2-22: Tests – Change of temperature (IEC 61300-2-22)
EN 61300-2-26	Part 2-26: Tests – Salt mist (IEC 61300-2-26)
EN 61300-2-27	Part 2-27: Tests – Dust – Laminar flow (IEC 61300-2-27)
EN 61300-2-42	Part 2-42: Tests – Static side load for connectors (IEC 61300-2-42)
EN 61300-2-44	Part 2-44: Tests – Flexing of the strain relief of fibre optic devices (IEC 61300-2-44)
EN 61300-2-46	Part 2-46: Tests – Damp heat cyclic (IEC 61300-2-46)
EN 61300-3-6:2009	Part 3-6: Examinations and measurements – Return loss (IEC 61300-3-6:2008)
EN 61300-3-10	Part 3-10: Examinations and measurements – Gauge retention force (IEC 61300-3-10)
EN 61300-3-15	Part 3-15: Examinations and measurements – Dome eccentricity of a convex polished ferrule endface (IEC 61300-3-15)
EN 61300-3-16	Part 3-16: Examinations and measurements – Endface radius of spherically polished ferrules (IEC 61300-3-16)
EN 61300-3-23	Part 3-23: Examination and measurements – Fibre position relative to ferrule endface (IEC 61300-3-23)
EN 61300-3-28	Part 3-28: Examinations and measurements – Transient loss (IEC 61300-3-28)
EN 61300-3-34	Part 3-34: Examinations and measurements - Attenuation of random mated connectors (IEC 61300-3-34)
EN 61300-3-42	Part 3-42: Examinations and measurements - Attenuation of single mode alignment sleeves and or adaptors with resilient alignment sleeves (IEC 61300-3-42)
EN 61753-1	Fibre optic interconnecting devices and passive components performance standard – Part 1: General and guidance for performance standards (IEC 61753-1)
EN 61754-23	Fibre optic connector interfaces – Part 23: Type LX.5 connector family (IEC 61754-23)
ISO 8015	Technical drawings – Fundamental tolerancing principle

Documents
Document Sharing Hub
Full document details: BS EN 50377-13-2:2011

3 Description

3.1 General

The LX.5 connector is a single position plug connector set of plug/ adaptor/ plug configuration characterised by cylindrical, spring loaded butting ferrules of 1,25 mm nominal diameter and a latched push-pull coupling mechanism. The optical alignment mechanism of the connectors is of a resilient sleeve style.

3.2 Plug

The plug features a cylindrical full zirconia ceramic ferrule and a latched push-pull mechanism. It has a single male key which is used to limit and may be used to orientate, the relative rotation between mated connectors.

A cover (dustcap) to protect the ferrule endface is integrated in the connector.

3.3 Duplex adaptor

The adaptor has a zirconia ceramic resilient alignment sleeve.

The mounting style can be:

a) square flange - 2 hole fixing;

b) square flange - clip fixing.

Covers (dustcaps) are integrated in each port of the adaptor.

3.4 Materials

Materials which are not specified or which are not specifically described are left to the discretion of the manufacturer.

3.5 Dimensions

Outline dimensions and other dimensions necessary to ensure intermateability or which affect performance are specified. All other dimensions are left to the discretion of the manufacturer. Where the mating face limit dimensions are not in agreement with an EN standard this is clearly stated.

3.6 Colour and marking

Marking of the product shall be in the following order of precedence:

– identification of manufacturer;

– manufacturing date code: year/week;

– manufacturers part number;

– variant identification number.

The following colour scheme is preferred.

Documents
Document Sharing Hub
Full document details: BS EN 50377-13-2:2011

Table 2 – Preferred colour scheme

Adaptor	Boot
Blue	Blue
NOTE Preferred RAL number 5015.	

4 Variants

4.1 Terminated plug

The defined fibre/cable variants are given in Table 3.

Table 3 – Plug variants

E	N	5	0	3	7	7	-	1	3	-	2	-	*	*	-	*	2

Variant No.	Fibre/Cable ∅ mm	Structure
01	0,7 – 1,4	Buffered fibre
02	1,7 ± 0,2	Reinforced cable
03	2,1 ± 0,2	Reinforced cable
04	2,4 ± 0,2	Reinforced cable

Code	Attenuation grade
B	B
C	C

Code	Return loss grade
2	2

AVA Documents
Document Sharing Hub
Full document details: BS EN 50377-13-2:2011

4.2 Adaptor

The following variants are permitted.

Table 4 – Adaptor variants

E	N	5	0	3	7	7	-	1	3	-	2	-	*	*

Variant No.	Format
01	Square flange – 2 hole fixing
02	Square flange – clip fixing

5 Dimensional requirements

5.1 Outline dimensions

5.1.1 Plug

Variant No. 01

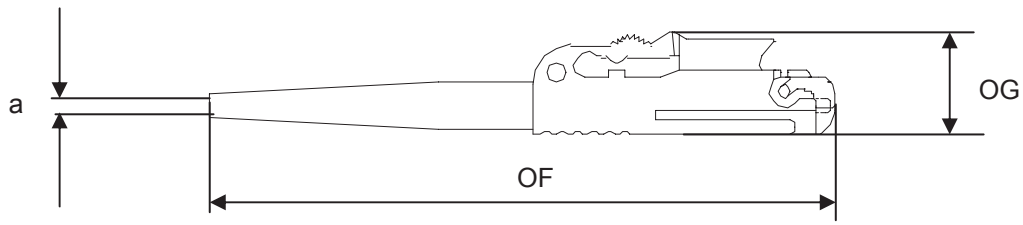

Figure 1 a) Outline dimensions buffered fibre

Variant No. 02 – 04

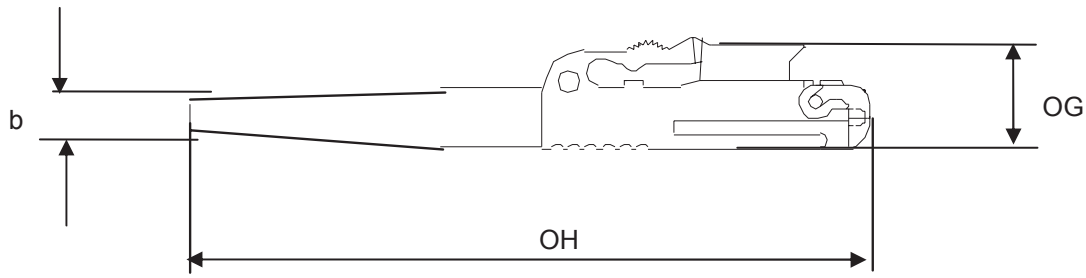

Figure 1 b) Outline dimensions reinforced cable

Documents
Document Sharing Hub
Full document details: BS EN 50377-13-2:2011

Reference	Dimensions			Notes
	min.	mm	max.	
a	0,7		0,9	
b	1,7		2,4	
OF	-		43,9	
OG	-		8,34	
OH	-		54,1	

Figure 1 – Outline dimensions – Plug

5.1.2 Duplex adaptor

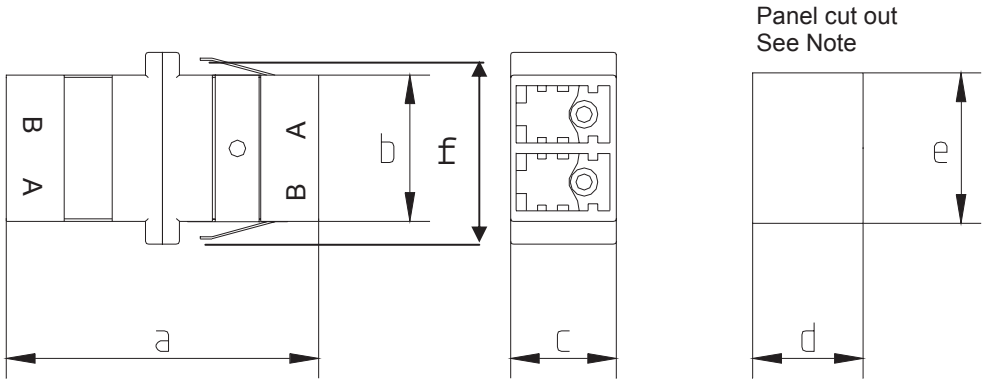

Reference	Dimensions			Notes
	min.	mm	max.	
a	27,5		27,8	
b	12,9		13,05	
c	9,3		9,45	
d	9,5		10,0	
e	13,0		13,5	
f	15,0		15,3	
NOTE Panel thickness should not exceed 1,7 mm.				

Figure 2 a) Outline dimensions – Adaptor variant A01

Documents
Document Sharing Hub
Full document details: BS EN 50377-13-2:2011

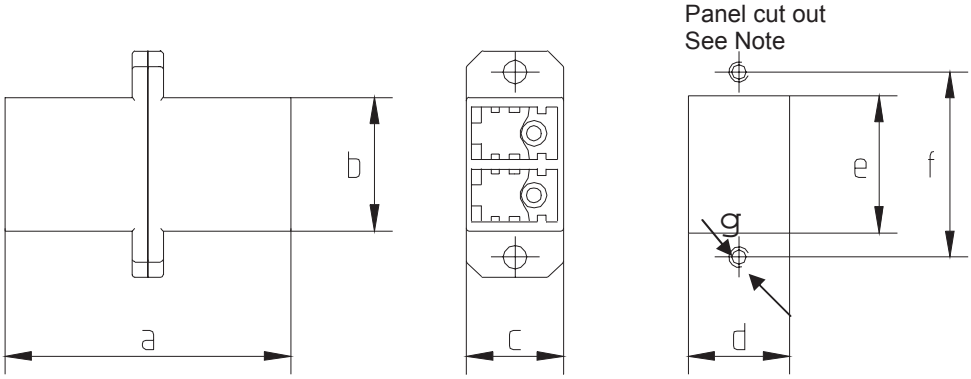

Reference	Dimensions			Notes
	min.	mm	max.	
a	27,5		27,8	
b	12,9		13,1	
c	9,3		9,4	
d	9,5		10,0	
e	13,0		13,5	
f	15,0		18,1	
g		M2		
NOTE Panel thickness should not exceed 1,7 mm.				

Figure 2 b) Outline dimensions – Adaptor variant A02

Figure 2 – Outline dimensions – Duplex adaptor

5.2 Mating face and other limit dimensions

5.2.1 Plug

The mating face dimensions are in accordance with EN 61754-23. See Figure 3.

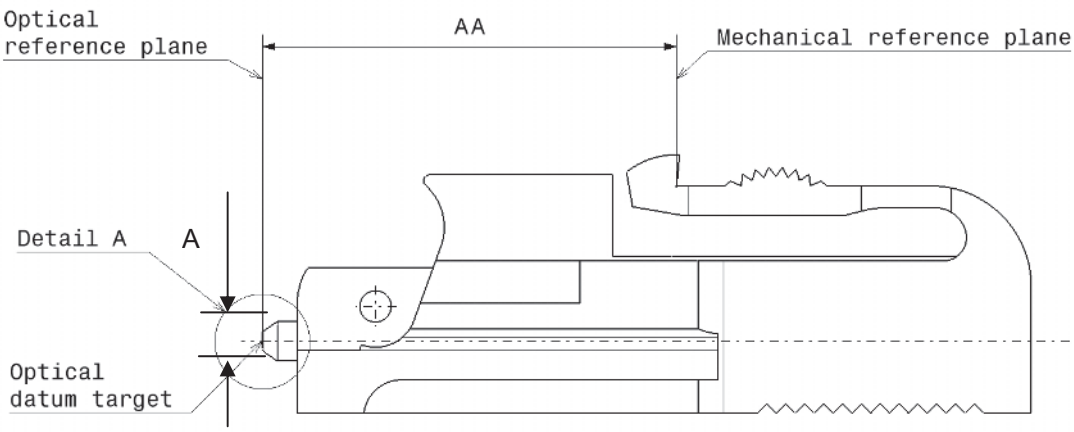

Figure 3 a) Plug connector interface reference planes

Documents
Document Sharing Hub
Full document details: BS EN 50377-13-2:2011