BRITISH STANDARD

BS EN 50377-8-6:2007

Connector sets and interconnect components to be used in optical fibre communication systems — Product specifications —

Part 8-6: LSH-HR simplex terminated on IEC 60793-2-50 category B1.1 and B1.3 singlemode fibre, with full zirconia ferrule category C

The European Standard EN 50377-8-6:2007 has the status of a British Standard

ICS 33.180.20

NO COPYING WITHOUT BSI PERMISSION EXCEPT AS PERMITTED BY COPYRIGHT LAW

Document Sharing Hub
British Standards

Full document details: BS EN 50377-8-6:2007

National foreword

This British Standard is the UK implementation of EN 50377-8-6:2007.

The UK participation in its preparation was entrusted by Technical Committee GEL/86, Fibre optics, to Subcommittee GEL/86/2, Fibre optic interconnecting devices and passive components.

A list of organizations represented on this committee can be obtained on request to its secretary.

This publication does not purport to include all the necessary provisions of a contract. Users are responsible for its correct application.

Compliance with a British Standard cannot confer immunity from legal obligations.

This British Standard was published under the authority of the Standards Policy and Strategy Committee on 28 September 2007

© BSI 2007

ISBN 978 0 580 57567 9

Amendments issued since publication

Amd. No.	Date	Comments

Documents
Document Sharing Hub

Full document details: BS EN 50377-8-6:2007

EUROPEAN STANDARD

NORME EUROPÉENNE

EUROPÄISCHE NORM

EN 50377-8-6

August 2007

ICS 33.180.20

English version

Connector sets and interconnect components to be used in optical fibre communication systems - Product specifications - Part 8-6: LSH-HR simplex terminated on IEC 60793-2-50 category B1.1 and B1.3 singlemode fibre, with full zirconia ferrule category C

Jeux de connecteurs et composants d'interconnexion à utiliser dans les systèmes de communication par fibres optiques - Spécifications de produit - Partie 8-6: Type LSH-HR simplex câblé sur une fibre unimodale des catégories B1.1 et B1.3 de la CEI 60793-2-50, férule tout zircone, catégorie C

Steckverbindersätze und Verbindungsbauelemente für Lichtwellenleiter-Datenübertragungssysteme - Produktnormen - Teil 8-6: Bauart LSH-HR-Simplex zum Anschluss an Einmodenfasern der Typen B1.1 und B1.3 nach IEC 60793-2-50 mit Zirkonium-Stift für die Kategorie C

This European Standard was approved by CENELEC on 2007-03-01. CENELEC members are bound to comply with the CEN/CENELEC Internal Regulations which stipulate the conditions for giving this European Standard the status of a national standard without any alteration.

Up-to-date lists and bibliographical references concerning such national standards may be obtained on application to the Central Secretariat or to any CENELEC member.

This European Standard exists in three official versions (English, French, German). A version in any other language made by translation under the responsibility of a CENELEC member into its own language and notified to the Central Secretariat has the same status as the official versions.

CENELEC members are the national electrotechnical committees of Austria, Belgium, Bulgaria, Cyprus, the Czech Republic, Denmark, Estonia, Finland, France, Germany, Greece, Hungary, Iceland, Ireland, Italy, Latvia, Lithuania, Luxembourg, Malta, the Netherlands, Norway, Poland, Portugal, Romania, Slovakia, Slovenia, Spain, Sweden, Switzerland and the United Kingdom.

CENELEC

European Committee for Electrotechnical Standardization
Comité Européen de Normalisation Electrotechnique
Europäisches Komitee für Elektrotechnische Normung

Central Secretariat: rue de Stassart 35, B - 1050 Brussels

© 2007 CENELEC - All rights of exploitation in any form and by any means reserved worldwide for CENELEC members.

Ref. No. EN 50377-8-6:2007 E

Documents
Document Sharing Hub

Full document details: BS EN 50377-8-6:2007

Foreword

This European Standard was prepared by the Technical Committee CENELEC TC 86BXA, Fibre optic interconnect, passive and connectorised components.

The text of the draft was submitted to the Unique Acceptance Procedure and was approved by CENELEC as EN 50377-8-6 on 2007-03-01.

The following dates were fixed:

– latest date by which the EN has to be implemented at national level by publication of an identical national standard or by endorsement	(dop)	2008-03-01
– latest date by which the national standards conflicting with the EN have to be withdrawn	(dow)	2010-03-01

Documents
Document Sharing Hub

Full document details: BS EN 50377-8-6:2007

Connector sets and interconnect components to be used in optical fibre communication systems - Product specifications

Part 8-6: LSH-HR simplex terminated on IEC 60793-2-50 category B1.1 and B1.3 singlemode fibre, with full zirconia ferrule category C

	Description		Performance
Coupling mechanism:	Latched push-pull	Application:	For use in EN category C (controlled environment)
Configuration:	Plug/adaptor/plug	Attenuation grades: (random mate)	B: ≤ 0,12 dB mean ≤ 0,25 dB for > 97 % of measurements C: ≤ 0,25 dB mean ≤ 0,50 dB for > 97 % of measurements
Fibre category:	EN 60793-2-50 Types B1.1 and B1.3		
Cable type:	See Table 3	Return loss grades:	1: ≥ 60 dB mated ≥ 55 dB unmated

Related documents:

EN 60794-2	Optical fibre cables - Part 2: Indoor cables - Sectional specification (IEC 60794-2)
EN 61300 series	Fibre optic interconnecting devices and passive components - Basic test and measurement procedures (IEC 61300 series)
EN 61753-1	Fibre optic interconnecting devices and passive components performance standard - Part 1: General and guidance for performance standards (IEC 61753-1)
EN 61754-15	Fibre optic connector interfaces - Part 15: Type LSH connector family (IEC 61754-15)
EN 61755-1	Fibre optic connector optical interfaces - Part 1: Optical interfaces for single mode non-dispersion shifted fibres - General and guidance (IEC 61755-1)
EN 61755-3-2 [1)]	Fibre optic connector optical interfaces - Part 3-2: Optical interface, 2,5 mm and 1,25 mm diameter cylindrical full zirconia ferrules for 8 degrees angled-PC single mode fibres (IEC 61755-3-2, mod.)

Outline and maximum dimensions:

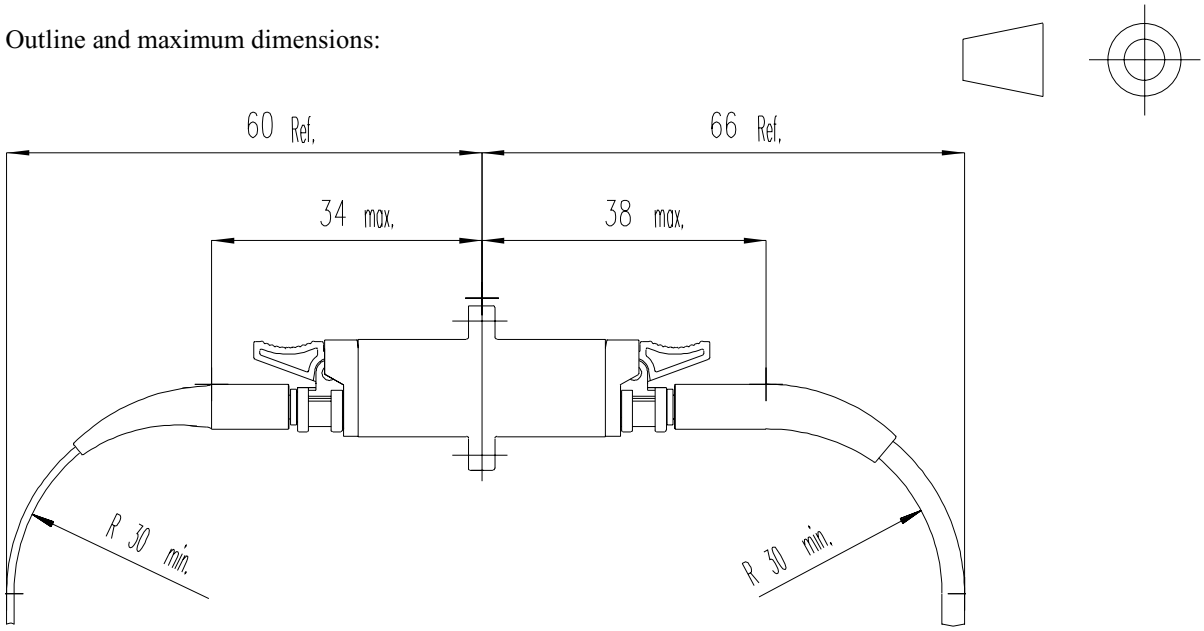

[1)] At draft stage.

Documents
Document Sharing Hub
Full document details: BS EN 50377-8-6:2007

Contents

1 Scope ... **5**
1.1 Product definition ... 5
1.2 Intermateability ... 5
1.3 Operating environment ... 5
1.4 Reliability ... 5
1.5 Quality assurance ... 5
2 Normative references ... **6**
3 Description ... **7**
3.1 Plug ... 7
3.2 Adaptor ... 7
3.3 Materials ... 7
3.4 Dimensions ... 7
3.5 Colour and marking ... 7
4 Variants ... **8**
4.1 Terminated plug ... 8
4.2 Adaptor ... 9
5 Dimensional requirements ... **10**
5.1 Outline dimensions ... 10
5.2 Mating face and other limit dimensions ... 14
6 Tests ... **23**
6.1 Sample size ... 23
6.2 Test and measurement methods ... 23
6.3 Test sequence ... 23
6.4 Pass/fail criteria ... 23
7 Test report ... **23**
8 Product qualification requirements ... **24**
8.1 Dimensional and marking requirements ... 24
8.2 Optical performance requirements ... 24
8.3 Mechanical performance requirements ... 26
8.4 Environmental performance requirements ... 30

Annex A (informative) **Attenuation against reference** ... **32**
Annex B (normative) **Adaptor matched reference plug details** ... **33**
Annex C (normative) **Sample size and product sourcing requirements** ... **34**
Annex D (informative) **Zirconia ferrule response surface** ... **35**

Bibliography ... **36**

Figure 1 - Outline dimensions - Plug ... 10
Figure 2 - Outline dimensions - Adaptor ... 11
Figure 3 - Mating face and other limit dimensions - Plug ... 14
Figure 4 - Ferrule end face geometry - After termination ... 16
Figure 5 - Positioning of fibre core ... 17
Figure 6 - Ferrule end face geometry - Allowable undercut ... 18
Figure 7 - Requirements for the attenuation grades for the plug fibre core connected to the ideal reference ... 19
Figure 8 - Mating face and other dimensions - Adaptor ... 20
Figure 9 - Pin gauge for adaptor ... 22
Figure D.1 - Radius vs. undercut and apex offset ... 35

Table 1 - Ensured level of random attenuation ... 5
Table 2 - Preferred colour scheme ... 7
Table 3 - Plug variants ... 8
Table 4 - Adaptor variants ... 9
Table 5 - Geometrical parameters ... 17
Table 6 - Optical performance requirements ... 24
Table 7 - Mechanical performance requirements ... 26
Table 8 - Environmental performance requirements ... 30

Documents
Document Sharing Hub

Full document details: BS EN 50377-8-6:2007

1 Scope

1.1 Product definition

This European Standard contains the initial, start of life dimensional, optical, mechanical and environmental performance requirements which a connector terminated with cylindrical zirconia 8 degree angled PC ferrule and assembled singlemode resilient alignment sleeve LSH-APC simplex connector set (plug/adaptor/plug), adaptor and patchcord must meet in order for it to be categorised as an EN standard product.

Since different variants and grades of performance are permitted, product marking details are given in 3.5.

1.2 Intermateability

Although all products conforming to the requirements of this standard will intermate, the resulting level of random attenuation performance will only be ensured in accordance with Table 1. The intention is that this will be true irrespective of the manufacturing source(s) of the product.

When intermating plug variants having different attenuation grades, the resulting level of attenuation can not be assured to be any better than the worst attenuation grade.
The intermating of a grade C plug with a grade B plug will result in an uncertain level of random attenuation performance.

Table 1 - Ensured level of random attenuation

Plug variant / Attenuation grade	C	B
C	C	C
B	C	B

1.3 Operating environment

The tests selected combined with the severities and durations are representative of a category C environment described in EN 61753-1.

1.4 Reliability

Whilst the anticipated service life expectancy of the product in this environment is 20 years, compliance with this standard does not guarantee the reliability of the product. This should be predicted using a recognised reliability assessment programme.

1.5 Quality assurance

Compliance with this standard does not guarantee the manufacturing consistency of the product. This should be maintained using a recognised quality assurance programme.

Documents
Document Sharing Hub

Full document details: BS EN 50377-8-6:2007

2 Normative references

The following referenced documents are indispensable for the application of this document. For dated references, only the edition cited applies. For undated references, the latest edition of the referenced document (including any amendments) applies.

EN 60793-2-50	Optical fibres - Part 2-50: Product specifications - Sectional specification for class B single-mode fibres (IEC 60793-2-50)
EN 61300-2-1	Fibre optic interconnecting devices and passive components - Basic test and measurement procedures - Part 2-1: Tests - Vibration (sinusoidal) (IEC 61300-2-1)
EN 61300-2-2	Fibre optic interconnecting devices and passive components - Basic test and measurement procedures - Part 2-2: Tests - Mating durability (IEC 61300-2-2)
EN 61300-2-4	Fibre optic interconnecting devices and passive components - Basic test and measurement procedures - Part 2-4: Tests - Fibre/cable retention (IEC 61300-2-4)
EN 61300-2-6	Fibre optic interconnecting devices and passive components - Basic test and measurement procedures - Part 2-6: Tests - Tensile strength of coupling mechanism (IEC 61300-2-6)
EN 61300-2-12	Fibre optic interconnecting devices and passive components - Basic test and measurement procedures - Part 2-12: Tests - Impact (IEC 61300-2-12)
EN 61300-2-17	Fibre optic interconnecting devices and passive components - Basic test and measurement procedures - Part 2-17: Tests - Cold (IEC 61300-2-17)
EN 61300-2-18	Fibre optic interconnecting devices and passive components - Basic test and measurement procedures - Part 2-18: Tests - Dry heat - High temperature endurance (IEC 61300-2-18)
EN 61300-2-19	Fibre optic interconnecting devices and passive components - Basic test and measurement procedures - Part 2-19: Tests - Damp heat (steady state) (IEC 61300-2-19)
EN 61300-2-22	Fibre optic interconnecting devices and passive components - Basic test and measurement procedures - Part 2-22: Tests - Change of temperature (IEC 61300-2-22)
EN 61300-2-42	Fibre optic interconnecting devices and passive components - Basic test and measurement procedures - Part 2-42: Tests - Static side load for connectors (IEC 61300-2-42)
EN 61300-2-44	Fibre optic interconnecting devices and passive components - Basic test and measurement procedures - Part 2-44: Tests - Flexing of the strain relief of fibre optic devices (IEC 61300-2-44)
EN 61300-3-4	Fibre optic interconnecting devices and passive components - Basic test and measurement procedures - Part 3-4: Examinations and measurements - Attenuation (IEC 61300-3-4)
EN 61300-3-6	Fibre optic interconnecting devices and passive components - Basic test and measurement procedures - Part 3-6: Examinations and measurements - Return loss (IEC 61300-3-6)
EN 61300-3-10	Fibre optic interconnecting devices and passive components - Basic test and measurement procedures - Part 3-10: Examinations and measurements - Gauge retention force (IEC 61300-3-10)
EN 61300-3-15	Fibre optic interconnecting devices and passive components - Basic test and measurement procedures - Part 3-15: Examinations and measurements - Eccentricity of a convex polished ferrule endface (IEC 61300-3-15)
EN 61300-3-16	Fibre optic interconnecting devices and passive components - Basic test and measurement procedures - Part 3-16: Examinations and measurements - Endface radius of spherically polished ferrules (IEC 61300-3-16)
EN 61300-3-23	Fibre optic interconnecting devices and passive components - Basic test and measurement procedures - Part 3-23: Examinations and measurements - Fibre position relative to ferrule endface (IEC 61300-3-23)
EN 61300-3-34	Fibre optic interconnecting devices and passive components - Basic test and measurement procedures - Part 3-34: Examinations and measurements - Attenuation of random mated connectors (IEC 61300-3-34)
EN 61300-3-42 [1)]	Fibre optic interconnecting devices and passive components - Basic test and measurement procedures - Part 3-42: Examinations and measurements - Attenuation of single mode alignment sleeves and or adaptors with resilient alignment sleeves (IEC 61300-3-42) [1)]
EN 61753-1	Fibre optic interconnecting devices and passive components performance standard - Part 1: General and guidance for performance standards (IEC 61753-1)

[1)] At draft stage.

Documents
Document Sharing Hub
Full document details: BS EN 50377-8-6:2007

3 Description

The LSH-APC connector is a single position plug connector set of plug/adaptor/plug configuration characterised by a cylindrical, spring loaded butting ferrule of 2,5 mm nominal diameter and a latched push-pull coupling mechanism. The optical alignment mechanism of the connectors is of a resilient sleeve style.

3.1 Plug

The plug features a cylindrical full zirconia ferrule and a latched push-pull mechanism. The plug has mechanical and colour coding.

3.2 Adaptor

The adaptor has a zirconia ceramic resilient alignment sleeve. The mounting style can be:

i square flange - 2 hole fixing;
ii square flange - side clip fixing;
iii square flange - top-bottom clip fixing.

Covers (dustcaps) shall be provided to protect each port of the adaptor. The adaptor has a mechanical coding identifiable by colour.

3.3 Materials

Materials which are not specified or which are not specifically described are left to the discretion of the manufacturer.

3.4 Dimensions

Outline dimensions and other dimensions necessary to ensure intermateability or which affect performance are specified. All other dimensions are left to the discretion of the manufacturer. Where the mating face limit dimensions are not in agreement with an EN Interface Standard this is clearly stated.

3.5 Colour and marking

Marking of the product shall be in the following order of precedence:

- identification of manufacturer;
- manufacturing date code: year/week;
- manufacturers part number;
- variant identification number.

The following colour scheme is preferred:

Table 2 - Preferred colour scheme

Adaptor	Delatch housing
Green	Green
Preferred RAL number 6018	

Documents
Document Sharing Hub

Full document details: BS EN 50377-8-6:2007

4 Variants

4.1 Terminated plug

The following variants are permitted:

Table 3 - Plug variants

E	N	5	0	3	7	7	-	8	-	6	-	*	*	*	-	*	1

No.	Fibre/Cable ∅ mm	Structure
01	0,6 - 1,4	Buffered fibre
02	2,0 ± 0,2	Reinforced cable
03	2,5 ± 0,2	Reinforced cable
04	2,8 ± 0,2	Reinforced cable
05	3,0 ± 0,2	Reinforced cable
06	3,2 ± 0,2	Reinforced cable

Mechanical code	Colour code for the latch	Note
0	Green	1, not coded
1	Red, RAL 3020	
2	Brown, RAL 8004	
3	Yellow, RAL 1016	
4	Orange, RAL 2003	
5	Violet, RAL 4008	
6	White, RAL 9010	
NOTE Universal, intermatable to all mechanical and colour coded adaptors.		

Code	Attenuation grade
B	B
C	C

Code	Return loss grade
1	1

Documents
Document Sharing Hub
Full document details: BS EN 50377-8-6:2007

4.2 Adaptor

The following variants are permitted:

Table 4 - Adaptor variants

E	N	5	0	3	7	7	-	8	-	6	-	D	*	*	*

No.	Format
01	Square flange 2 hole screw fixing
02	Square flange side clip fixing
03	Square flange top-bottom clip fixing

Mechanical code	Colour code for the frame	Note
0	Green	1, not coded
1	Red, RAL 3020	
2	Brown, RAL 8004	
3	Yellow, RAL 1016	
4	Orange, RAL 2003	
5	Violet, RAL 4008	
6	White, RAL 9010	
NOTE Universal, intermatable to all mechanical and colour coded plugs.		

Documents
Document Sharing Hub
Full document details: BS EN 50377-8-6:2007

5 Dimensional requirements

5.1 Outline dimensions

5.1.1 Plug variants

Variant No. 01* (*: third digit related to mechanical coding)

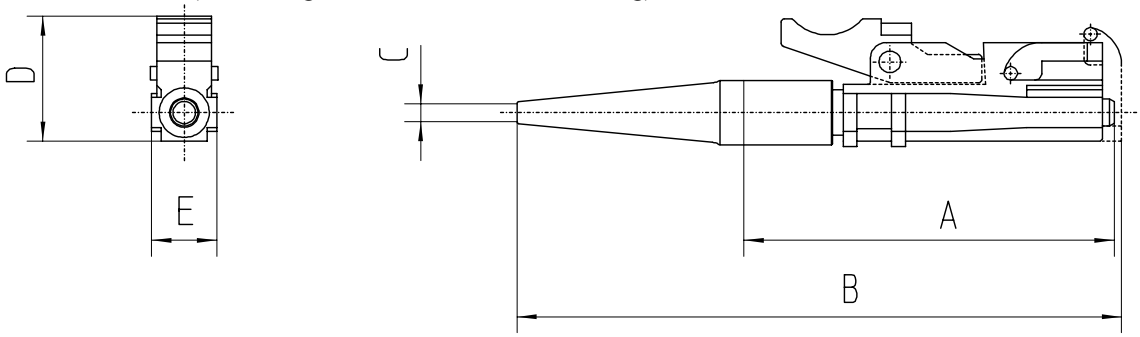

Ref.	Dimensions min.	mm	max.	Note
A	-		34	1
B	-		60	
C	0,7		1,4	
D	-		13,05	
E	5,95		5,98	

Variant No. 02*/03*/04*/05*/06*

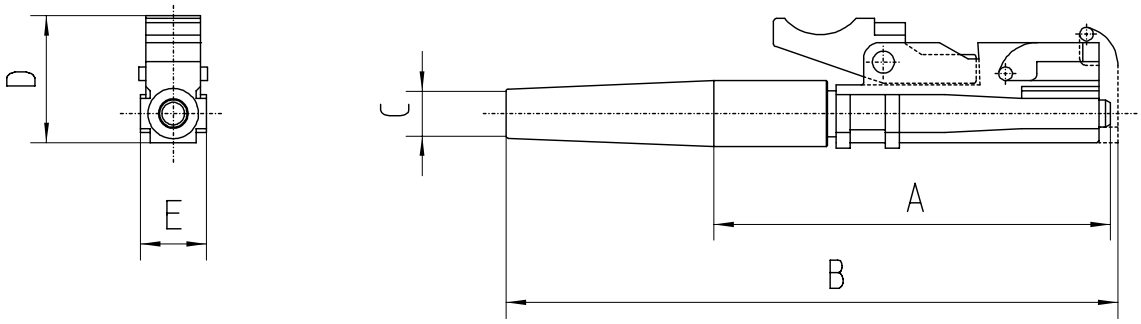

Ref.	Dimensions min.	mm	max.	Note
A	-		38	1
B	-		63	
C	1,8		3,5	
D	-		13,05	
E	5,95		5,98	
NOTE Rigid length.				

Figure 1 - Outline dimensions - Plug

Documents
Document Sharing Hub
Full document details: BS EN 50377-8-6:2007