BS EN 50700:2023

BSI Standards Publication

Information technology — Premises distribution access network (PDAN) cabling to support deployment of optical broadband networks

Documents
Document Sharing Hub

Full document details: BS EN 50700:2023

National foreword

This British Standard is the UK implementation of EN 50700:2023. It supersedes BS EN 50700:2014, which is withdrawn.

The UK participation in its preparation was entrusted to Technical Committee TCT/7/2, Telecommunications; Installation requirements: Cabling installation and UK implementation.

A list of organizations represented on this committee can be obtained on request to its committee manager.

Contractual and legal considerations

This publication has been prepared in good faith, however no representation, warranty, assurance or undertaking (express or implied) is or will be made, and no responsibility or liability is or will be accepted by BSI in relation to the adequacy, accuracy, completeness or reasonableness of this publication. All and any such responsibility and liability is expressly disclaimed to the full extent permitted by the law.

This publication is provided as is, and is to be used at the recipient's own risk.

The recipient is advised to consider seeking professional guidance with respect to its use of this publication.

This publication is not intended to constitute a contract. Users are responsible for its correct application.

© The British Standards Institution 2023
Published by BSI Standards Limited 2023

ISBN 978 0 539 21539 7

ICS 35.110

Compliance with a British Standard cannot confer immunity from legal obligations.

This British Standard was published under the authority of the Standards Policy and Strategy Committee on 30 November 2023.

Amendments/corrigenda issued since publication

Date	Text affected

Documents
Document Sharing Hub

Full document details: BS EN 50700:2023

EUROPEAN STANDARD

NORME EUROPÉENNE

EUROPÄISCHE NORM

EN 50700

October 2023

ICS 35.110

Supersedes EN 50700:2014

English Version

Information technology - Premises distribution access network (PDAN) cabling to support deployment of optical broadband networks

Technologies de l'information - Câblage du réseau de distribution privé du réseau d'accès dans les locaux (PDAN) supportant le déploiement des réseaux optiques à large bande

Informationstechnik - Standortverkabelung als Teil des optischen Zugangsnetzes von optischen Breitbandnetzen

This European Standard was approved by CENELEC on 2023-07-04. CENELEC members are bound to comply with the CEN/CENELEC Internal Regulations which stipulate the conditions for giving this European Standard the status of a national standard without any alteration.

Up-to-date lists and bibliographical references concerning such national standards may be obtained on application to the CEN-CENELEC Management Centre or to any CENELEC member.

This European Standard exists in three official versions (English, French, German). A version in any other language made by translation under the responsibility of a CENELEC member into its own language and notified to the CEN-CENELEC Management Centre has the same status as the official versions.

CENELEC members are the national electrotechnical committees of Austria, Belgium, Bulgaria, Croatia, Cyprus, the Czech Republic, Denmark, Estonia, Finland, France, Germany, Greece, Hungary, Iceland, Ireland, Italy, Latvia, Lithuania, Luxembourg, Malta, the Netherlands, Norway, Poland, Portugal, Republic of North Macedonia, Romania, Serbia, Slovakia, Slovenia, Spain, Sweden, Switzerland, Türkiye and the United Kingdom.

European Committee for Electrotechnical Standardization
Comité Européen de Normalisation Electrotechnique
Europäisches Komitee für Elektrotechnische Normung

CEN-CENELEC Management Centre: Rue de la Science 23, B-1040 Brussels

© 2023 CENELEC All rights of exploitation in any form and by any means reserved worldwide for CENELEC Members.

Ref. No. EN 50700:2023 E

Documents
Document Sharing Hub

Full document details: BS EN 50700:2023

Contents

Page

European foreword **5**
1 Scope **11**
2 Normative references **11**
3 Terms, definitions and abbreviations **12**
3.1 Terms and definitions 12
3.2 Abbreviations 15
4 Conformance **15**
5 Structure of PDAN cabling within multi-subscriber premises **16**
5.1 General 16
5.2 Functional elements 16
5.3 General structure and hierarchy 16
5.4 Cabling subsystems 18
5.4.1 External cabling subsystem 18
5.4.2 Internal cabling subsystem 18
5.5 Design objectives 18
5.6 Accommodation of functional elements 19
5.6.1 Fibre management systems providing protection to optical fibre cables and cable elements 19
5.6.2 Example configuration of multi-subscriber premises 19
5.6.3 Example configuration of subscriber premises connected to FTTH networks 20
5.7 Interfaces 20
5.7.1 Equipment interfaces and test interfaces 20
5.7.2 Cabling 21
5.8 Dimensioning and configuring 21
5.8.1 Premises dimensions 21
5.8.2 Distributors 21
5.8.3 Subscriber interface (SI) 21
5.8.4 Operator access point (OAP) 22
5.8.5 External network test interface (ENTI) 22
5.8.6 Entrance facilities 23
6 PDAN cabling performance **23**
6.1 General 23
6.2 Environmental performance 23
6.3 Transmission performance 24
6.3.1 Optical return loss 24

AVA Documents
Document Sharing Hub

Full document details: BS EN 50700:2023

6.3.2 Attenuation 24
7 Implementation options 24
8 Cable requirements 25
8.1 General 25
8.2 Cable 25
9 Connecting hardware requirements 25
9.1 General requirements 25
9.2 Connecting hardware at the SI 25
9.3 Connecting hardware at other places 26
9.3.1 Plugs and adaptors 26
9.3.2 Mechanical and fusion splices 26
10 Cords 26
11 Accommodation of the subscriber interface (SI) and the customer premises equipment (CPE) 26
11.1 Security for data integrity 26
11.2 Placement of the housing 27
Annex A (informative) **Broadband infrastructure external to multi-subscriber premises 28**
Annex B (informative) **Example implementation of PDAN in multi-tenant premises 29**
Annex C (informative) **Example implementation of PDAN in privately managed real estate 32**
Annex D (informative) **Example implementation of PDAN cabling connecting a single subscriber premises 37**
Annex E (informative) **A-deviation 39**
Bibliography 41

Figures

Figure 1 — Multi-subscriber PDAN cabling (LOC external to the premises) 7
Figure 2 — Example of multi-subscriber PDAN cabling (LOC internal to the premises) 7
Figure 3 — Schematic relationship between EN 50700 and other relevant TC 215 standards 9
Figure 4 — PDAN cabling distribution schematic with future LOC external to premises 17
Figure 5 — PDAN cabling distribution schematic with ADP (and future LOC) internal to premises 17
Figure 6 — PDAN cabling distribution schematic with ADP (and future LOC) internal to multi-subscriber building 17
Figure 7 — Example of accommodation of functional elements 20
Figure 8 — Test and equipment interfaces 20
Figure 9 — SI connection to the customer network 22
Figure 10 — Examples of arrangements of SI, OAP and ENTI 22
Figure 11 — Examples of SI configuration of passive PDAN cabling 23
Figure A.1 — Broadband optical fibre cabling to subscriber premises 28
Figure B.1 — Example implementation – multi-tenant premises on a campus 29
Figure C.1 — Schematic with key used in figures of Annex C 32
Figure C.2 — Example implementation - pre-construction in small areas 33

AVA Documents
Document Sharing Hub

Full document details: BS EN 50700:2023

Figure C.3 — Example implementation — pre-construction in larger areas 33
Figure C.4 — Example implementation — construction in small areas 34
Figure C.5 — Example implementation — construction in large areas 35
Figure D.1 — Example implementation of PDAN cabling connecting a single subscriber premises 37

Tables

Table 1 — Contextual relationship between EN 50700 and other relevant TC 215 standards 10
Table 2 — PDAN cabling attenuation 24

Documents
Document Sharing Hub

Full document details: BS EN 50700:2023

European foreword

This document (EN 50700:2023) has been prepared by CLC/TC 215 “Electrotechnical aspects of telecommunication equipment”.

The following dates are fixed:

- latest date by which this document has to be implemented at national level by publication of an identical national standard or by endorsement (dop) 2024-04-20
- latest date by which the national standards conflicting with this document have to be withdrawn (dow) 2026-10-20

This document supersedes EN 50700:2014.

EN 50700:2023 includes the following significant technical changes with respect to EN 50700:2014:

a) Annex B to Annex D with example implementations of PDAN in multi-tenant premises, in privately managed real estate and in local to single subscriber premises, respectively, added;

b) editorial improvements as appropriate;

c) A-deviations for France updated, A-deviations for Finland and Spain added.

Attention is drawn to the possibility that some of the elements of this document may be the subject of patent rights. CEN-CENELEC shall not be held responsible for identifying any or all such patent rights.

Any feedback and questions on this document should be directed to the users’ national standards body/national committee. A complete listing of these bodies can be found on the CEN and CENELEC websites.

AVA Documents
Document Sharing Hub

Full document details: BS EN 50700:2023

Introduction

This document has been developed to enable the application of system-independent pre-cabling of multi-subscriber premises to enable the delivery of broadband telecommunication services.

Fibre to the home (FTTH) is the subject of standardization in the form of:

— Technical Reports such as CLC/TR 50510 which cover general concepts and system planning;

— component standards that support its implementation;

— installation standards such as the EN 50174 series.

FTTH is a general term applied to the provision of broadband optical networks to residential premises. Some premises accommodate multiple subscribers and these may be residential or commercial enterprises such as offices, data centres, industrial, retail or a mix of these subscriber types. These multi-subscriber premises may consist of one or more buildings.

Multi-subscriber premises also include areas of privately managed real estate comprising multiple individual premises which themselves can house single or multiple subscribers.

NOTE Annex D describes the connection of individual subscribers directly to FTTH networks using the terminology of this document.

The cabling specified in this document:

— constitutes the part of the broadband access network within multi-subscriber premises termed the premises distribution access network (PDAN); the access network serving single subscriber premises is not normatively addressed in this document;

— is intended to be pre-installed, in readiness for subsequent connection of the multi-subscriber premises, to an access provider's infrastructure to an access demarcation point (ADP) - enabling broadband content to be delivered by the service provider(s).

Within premises, the importance of the information technology cabling infrastructure is similar to that of other fundamental building utilities such as heating, lighting and mains power. As with other utilities, interruptions to service can have a serious impact. Poor quality of service due to lack of design foresight, use of inappropriate components, incorrect installation, poor administration or inadequate support can disrupt service delivery.

This document:

— allows access providers to be aware of the minimum implementation delivered to them when they reach such multi-subscriber premises;

— maximizes the opportunity for network evolution by either the access provider or the service providers using that access infrastructure.

This document specifies the cabling between the access demarcation point (ADP) and the subscriber interface (SI). The transmission performance of the premises cabling between the last operator connection point (LOC) and the ADP is not addressed although the requirements for its accommodation are provided by external reference to the EN 50174 series. The location of the LOC can be either outside the premises' boundary (see the schematic in Figure 1) or inside the premises, internal or external to a building (see the schematic in Figure 2).

Documents
Document Sharing Hub

Full document details: BS EN 50700:2023

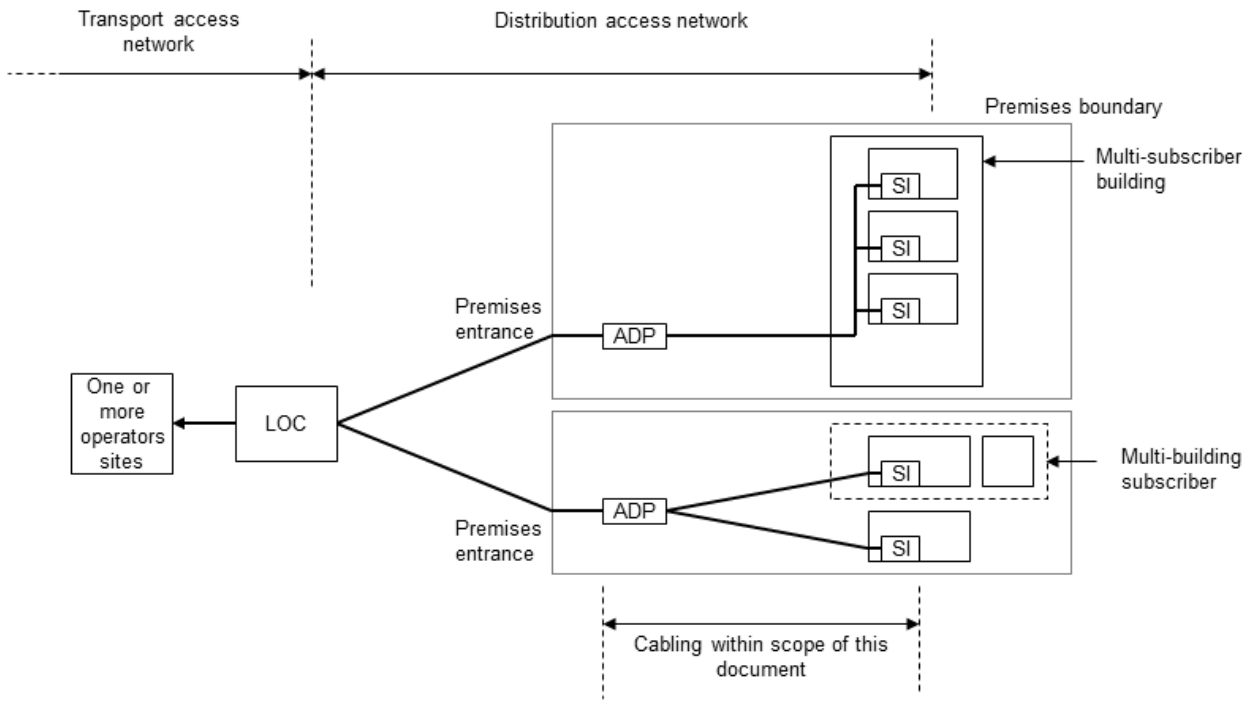

Figure 1 — Multi-subscriber PDAN cabling (LOC external to the premises)

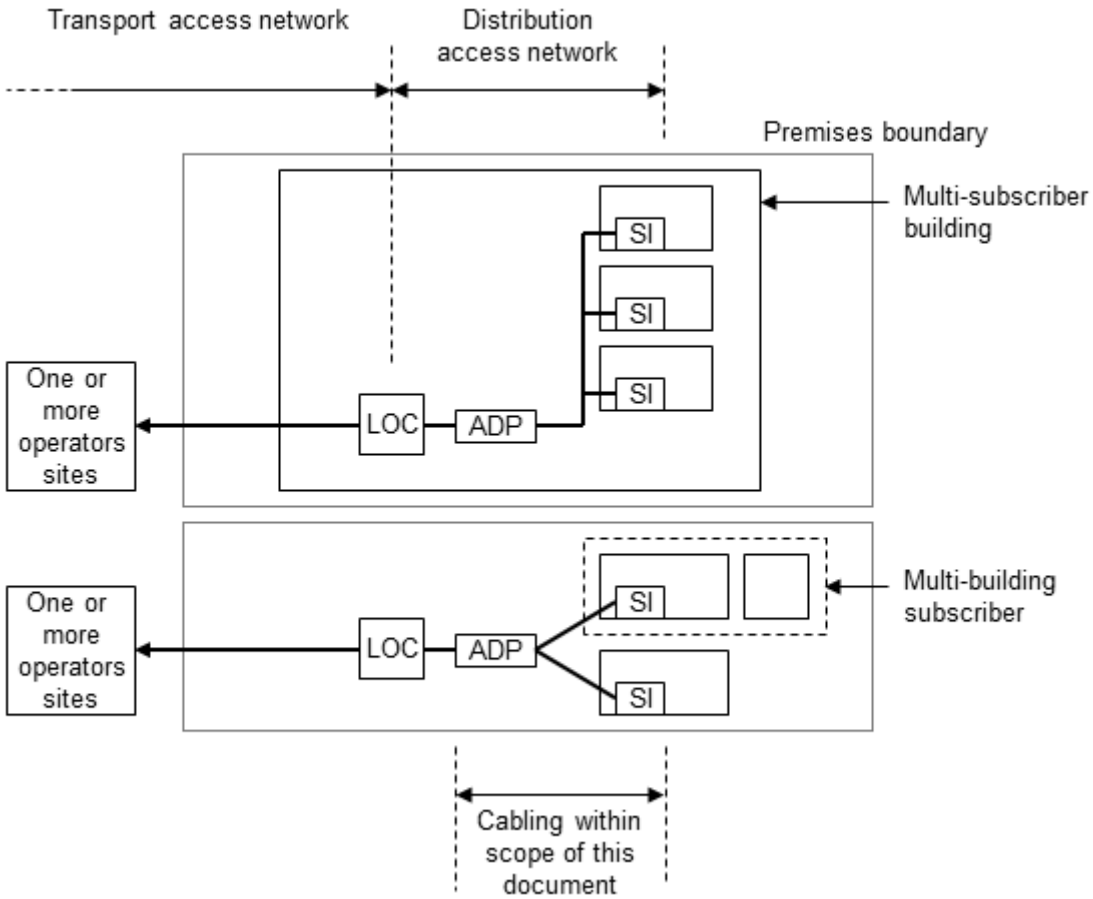

Figure 2 — Example of multi-subscriber PDAN cabling (LOC internal to the premises)

AVA Documents
Document Sharing Hub

Full document details: BS EN 50700:2023

Where the subscribers' premises are homes, the design of generic cabling beyond the SI is specified in EN 50173-4. CLC/TR 50173-99-2 and CLC/TR 50173-99-3 provide additional information in relation to cabling design within homes. For other types of subscribers, the design of generic cabling beyond the SI is specified in other documents in the EN 50173 series.

This document provides:

a) access providers with an application independent optical fibre cabling subsystem;

b) an open market for cabling components;

c) building professionals (for example, architects) with guidance for the accommodation of cabling and interfaces before specific requirements are known; i.e. in the initial planning either for construction or refurbishment.

This document specifies multi-vendor cabling, and is related to:

— standards for cabling components developed by Technical Committees of CENELEC and/or IEC;

— standards for the quality assurance and installation of information technology cabling (EN 50174 series) and testing of installed cabling (ISO/IEC 14763-3);

— applications developed by ETSI and Study Groups of ITU-T.

Figure 3 and Table 1 show the schematic and contextual relationships between the standards produced by TC 215 for information technology cabling, namely:

1) the EN 50173 series where this standard interfaces to the subscriber;

2) installation (EN 50174 series).

Documents
Document Sharing Hub

Full document details: BS EN 50700:2023

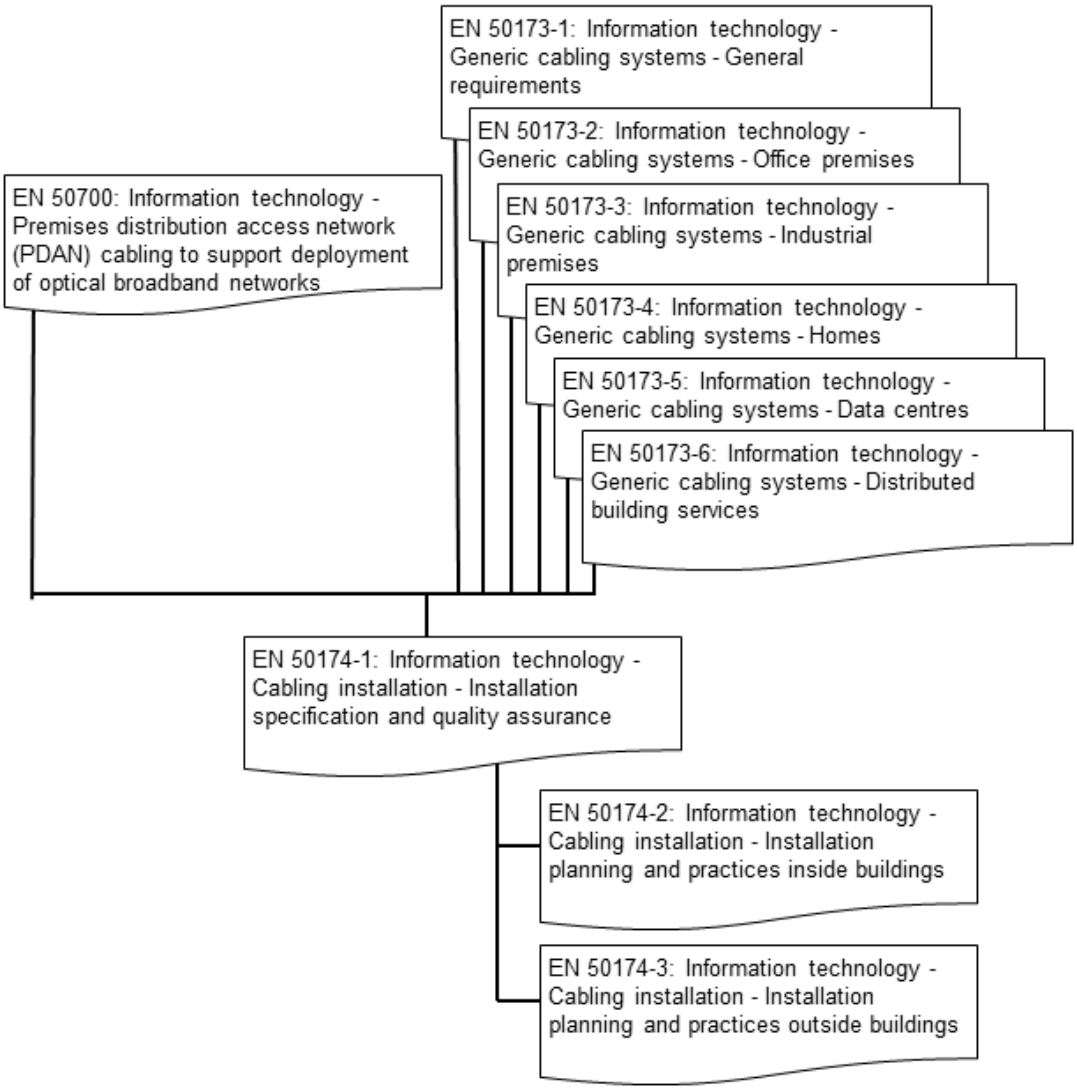

Figure 3 — Schematic relationship between EN 50700 and other relevant TC 215 standards

Documents
Document Sharing Hub

Full document details: BS EN 50700:2023

Table 1 — Contextual relationship between EN 50700 and other relevant TC 215 standards

PDAN cabling design phase	Specification phase	Installation phase	Operation phase
EN 50700 5: Structure of PDAN cabling within multi-subscriber premises 6: PDAN cabling performance 7: Implementation options 8: Cable requirements 9: Connecting hardware requirements	EN 50174-1 4 Requirements for specifying installations of information technology cabling 5: Requirements for installers of information technology cabling		EN 50174-1 4: Requirements for specifying installations of information technology cabling
	Planning phase		
	EN 50174-2 4: Requirements for planning installations of information technology cabling 6: Segregation of metallic information technology cabling and power supply cabling 7: Electricity distribution systems and lightning protection 8: Office (commercial) premises 9: Industrial premises 10: Homes 11: Data centres 12: Multi-tenant pathways and spaces and EN 50174-3 4. Requirements for planning installations of information technology cabling 5. Requirements for the installation of information technology cabling 6. Segregation 7. Additional installation practices for specific sites and services	EN 50174-2 5: Requirements for the installation of information technology cabling 6: Segregation of metallic information technology cabling and power supply cabling 8: Office (commercial) premises 9: Industrial premises 10: Homes 11: Data centres 12: Multi-tenant pathways and spaces and EN 50174-3 4. Requirements for planning installations of information technology cabling 5. Requirements for the installation of information technology cabling 6. Segregation 7. Additional installation practices for specific sites and services	

Documents
Document Sharing Hub

Full document details: BS EN 50700:2023

1 Scope

This document specifies the optical fibre access network cabling within single- and multi-subscriber premises termed the premises distribution access network (PDAN). The premises can comprise single or multiple buildings.

The cabling specified is intended to be pre-installed, in readiness for subsequent connection of the multi-subscriber premises to an access providers infrastructure to support deployment of optical broadband networks.

This document does not specify either the access network cabling external to the premises or the cabling within the subscriber space for onward distribution of services beyond the customer premises equipment.

This document specifies:

a) the structure and configuration of the optical fibre cabling;

b) cabling performance requirements;

c) implementation options.

Annex A contains information on network segments not covered by this document.

Safety practices in relation to optical power hazard are specified in EN 60825-2. Optical powers higher than the hazard levels specified in EN 60825-2 are not considered in this document.

Safety (electrical safety, fire, etc.) and electromagnetic compatibility (EMC) requirements are outside the scope of this document and are covered by other standards and regulations. However, information given in this document can be of assistance in meeting these standards and regulations.

2 Normative references

The following documents are referred to in the text in such a way that some or all of their content constitutes requirements of this document. For dated references, only the edition cited applies. For undated references, the latest edition of the referenced document (including any amendments) applies.

EN 50173-1:2018, *Information technology - Generic cabling systems - Part 1: General requirements*

EN 50174-1, *Information technology - Cabling installation - Part 1: Installation specification and quality assurance*

EN 50411-3-2:2011, *Fibre organisers and closures to be used in optical fibre communication systems - Product specifications - Part 3-2: Singlemode mechanical fibre splice*

EN IEC 60793-2-50:2019, *Optical fibres - Part 2-50: Product specifications - Sectional specification for class B single-mode fibres (IEC 60793-2-50:2012)*

EN 61754-20:2012, *Fibre optic interconnecting devices and passive components - Fibre optic connector interfaces - Part 20: Type LC connector family (IEC 61754-20:2012)*

EN 61755-1:2006, *Fibre optic connector optical interfaces - Part 1: Optical interfaces for single mode non-dispersion shifted fibres - General and guidance (IEC 61755-1:2005)*

EN 61755-2-2:2006, *Fibre optic connector optical interfaces - Part 2-2: Optical interface standard single mode angled physically contacting fibres (IEC 61755-2-2:2006)*

ISO/IEC 14763-3, *Information technology — Implementation and operation of customer premises cabling — Part 3: Testing of optical fibre cabling*

AVA Documents
Document Sharing Hub

Full document details: BS EN 50700:2023

3 Terms, definitions and abbreviations

3.1 Terms and definitions

For the purposes of this document the following terms and definitions apply.

ISO and IEC maintain terminology databases for use in standardization at the following addresses:

— ISO Online browsing platform: available at https://www.iso.org/obp/

— IEC Electropedia: available at https://www.electropedia.org/

3.1.1
access demarcation point
location from which premises distribution access network cabling is routed to subscribers

3.1.2
access network
functional elements (equipment and infrastructure) that enable communication between the core network and a customer network

[SOURCE: EN 50174-3:2013, 3.1.1]

3.1.3
access provider
operator or another entity providing the means to enable external telecommunications service provision to a subscriber

[SOURCE: EN 50174-3:2013, 3.1.2]

3.1.4
building entrance facility
facility that provides all necessary mechanical and electrical services for the entry of telecommunication cables into a building and which can enable transition from outdoor to indoor cable

[SOURCE: EN 50173-1:2018, 3.1.18]

3.1.5
cabling
system of telecommunications cables, cords and connecting hardware that supports the operation of information technology equipment

[SOURCE: EN 50173-1:2018, 3.1.23]

3.1.6
core network
functional elements (that is equipment and infrastructure) that enable communication between operator sites and/or network data centres

[SOURCE: EN 50174-3:2013, 3.1.7]

3.1.7
customer network
functional elements (equipment and infrastructure) that enable communication between the subscriber interface and one or more attached terminal equipment

Documents
Document Sharing Hub

Full document details: BS EN 50700:2023