BS EN 593:2017

BSI Standards Publication

Industrial valves - Metallic butterfly valves for general purposes

Documents
Document Sharing Hub

Full document details: BS EN 593:2017

National foreword

This British Standard is the UK implementation of EN 593:2017.
It supersedes BS EN 593:2009+A1:2011, which is withdrawn.

The UK participation in its preparation was entrusted to Technical Committee PSE/18/3, Industrial valves, steam traps, actuators and safety devices against excessive pressure - Part turn valves (Ball, plug and butterfly).

A list of organizations represented on this committee can be obtained on request to its secretary.

This publication does not purport to include all the necessary provisions of a contract. Users are responsible for its correct application.

© The British Standards Institution 2017
Published by BSI Standards Limited 2017

ISBN 978 0 580 93781 1

ICS 23.060.30

Compliance with a British Standard cannot confer immunity from legal obligations.

This British Standard was published under the authority of the Standards Policy and Strategy Committee on 30 November 2017.

Amendments/corrigenda issued since publication

Date	Text affected

Documents
Document Sharing Hub

Full document details: BS EN 593:2017

EUROPEAN STANDARD

NORME EUROPÉENNE

EUROPÄISCHE NORM

EN 593

October 2017

ICS 23.060.30

Supersedes EN 593:2009+A1:2011

English Version

Industrial valves - Metallic butterfly valves for general purposes

Robinetterie industrielle - Robinets métalliques à papillon d'usage général

Industriearmaturen - Metallische Klappen für den allgemeinen Gebrauch

This European Standard was approved by CEN on 31 August 2017.

CEN members are bound to comply with the CEN/CENELEC Internal Regulations which stipulate the conditions for giving this European Standard the status of a national standard without any alteration. Up-to-date lists and bibliographical references concerning such national standards may be obtained on application to the CEN-CENELEC Management Centre or to any CEN member.

This European Standard exists in three official versions (English, French, German). A version in any other language made by translation under the responsibility of a CEN member into its own language and notified to the CEN-CENELEC Management Centre has the same status as the official versions.

CEN members are the national standards bodies of Austria, Belgium, Bulgaria, Croatia, Cyprus, Czech Republic, Denmark, Estonia, Finland, Former Yugoslav Republic of Macedonia, France, Germany, Greece, Hungary, Iceland, Ireland, Italy, Latvia, Lithuania, Luxembourg, Malta, Netherlands, Norway, Poland, Portugal, Romania, Serbia, Slovakia, Slovenia, Spain, Sweden, Switzerland, Turkey and United Kingdom.

EUROPEAN COMMITTEE FOR STANDARDIZATION
COMITÉ EUROPÉEN DE NORMALISATION
EUROPÄISCHES KOMITEE FÜR NORMUNG

CEN-CENELEC Management Centre: Avenue Marnix 17, B-1000 Brussels

© 2017 CEN All rights of exploitation in any form and by any means reserved worldwide for CEN national Members.

Ref. No. EN 593:2017 E

Documents
Document Sharing Hub

Full document details: BS EN 593:2017

Contents

Page

European foreword ... 4
1 Scope ... 5
2 Normative references ... 5
3 Terms and definitions ... 7
4 Design requirements ... 8
4.1 General ... 8
4.2 Shell ... 10
4.3 Body ... 10
4.4 Obturator (disc) ... 13
4.5 Seat seal ... 13
4.6 Driving shaft ... 13
4.7 Shaft seal ... 14
4.8 Optional design features ... 14
4.9 Materials ... 15
4.10 Pressure/temperature ratings ... 16
4.11 Dimensions and tolerances ... 17
4.12 Operation ... 17
4.13 Permanent joining ... 19
4.14 Functional characteristics and performances ... 19
5 Final assessment ... 20
5.1 General ... 20
5.2 Additional tests ... 21
6 Designation ... 21
7 Marking and preparation for storage and transportation ... 21
7.1 Marking ... 21
7.2 Preparation for storage and transportation ... 22
Annex A (informative) Information to be supplied by the customer ... 23
Annex B (informative) Trim material list ... 25
Annex C (informative) Environmental corrosion protection ... 26
Annex D (informative) Correspondence between DN and NPS ... 27
Annex E (informative) Example for valve shaft calculation ... 29
E.1 General ... 29
E.2 Calculation ... 30
E.2.1 Shear stress ... 30
E.2.2 Combined shear stress (at valve bearing) (section 2-2) ... 30
E.2.3 Combined tensile stress at seating due to torsion and bending (section 2-2) ... 30
E.2.4 Shear stress at reduced area (sections 1-1, 3-3, 4-4) ... 31
E.3 Examples of influence of flow velocity/hydrodynamic torques for shaft sizing ... 31

Documents
Document Sharing Hub
Full document details: BS EN 593:2017

Annex ZA (informative) **Relationship between this European Standard and the essential requirements of Directive 2014/68/EU (Pressure Equipment Directive) aimed to be covered** 34

Bibliography 35

Documents
Document Sharing Hub
Full document details: BS EN 593:2017

European foreword

This document (EN 593:2017) has been prepared by Technical Committee CEN/TC 69 "Industrial valves", the secretariat of which is held by AFNOR.

This European Standard shall be given the status of a national standard, either by publication of an identical text or by endorsement, at the latest by April 2018, and conflicting national standards shall be withdrawn at the latest by April 2018.

Attention is drawn to the possibility that some of the elements of this document may be the subject of patent rights. CEN shall not be held responsible for identifying any or all such patent rights.

This document supersedes EN 593:2009+A1:2011.

This document has been prepared under a mandate given to CEN by the European Commission and the European Free Trade Association, and supports essential requirements of EU Directive 2014/68/EU.

For relationship with EU Directive, see informative Annex ZA, which is an integral part of this document.

The main technical changes compared to the previous edition are:

a) the extension of the dimensions to cover PN 2,5 to PN 160, Class 150 to Class 900 and DN 20 to DN 4 000;

b) the inclusion of single, double and triple eccentric designs;

c) a reference to EN 16668 for valves subject to European legislation on pressure equipment;

d) the addition of informative Annex D giving the correspondence between DN and NPS;

e) the addition of informative Annex E on valve torque curves at different flow velocities;

f) the updating of Annex ZA according to the new PED.

According to the CEN/CENELEC Internal Regulations, the national standards organizations of the following countries are bound to implement this European Standard: Austria, Belgium, Bulgaria, Croatia, Cyprus, Czech Republic, Denmark, Estonia, Finland, Former Yugoslav Republic of Macedonia, France, Germany, Greece, Hungary, Iceland, Ireland, Italy, Latvia, Lithuania, Luxembourg, Malta, Netherlands, Norway, Poland, Portugal, Romania, Serbia, Slovakia, Slovenia, Spain, Sweden, Switzerland, Turkey and the United Kingdom.

Documents
Document Sharing Hub
Full document details: BS EN 593:2017

1 Scope

This European Standard specifies minimum general requirements for butterfly valves having metallic bodies for use with all type of pipe end connections (e.g. wafer, lug, flange, butt welding) and used for isolating, regulating or control applications.

The PN and Class ranges are:

— PN 2,5; PN 6; PN 10; PN 16; PN 25; PN 40; PN 63; PN 100; PN 160;

— Class 150; Class 300; Class 600; Class 900.

The size range is:

— DN 20; DN 25; DN 32; DN 40; DN 50; DN 65; DN 80; DN 100; DN 125; DN 150; DN 200; DN 250; DN 300; DN 350; DN 400; DN 450; DN 500; DN 600; DN 700; DN 750; DN 800; DN 900; DN 1 000; DN 1 050; DN 1 100; DN 1 200; DN 1 400; DN 1 500; DN 1 600; DN 1 800; DN 2 000; DN 2 200; DN 2 400; DN 2 600; DN 2 800; DN 3 000; DN 3 200; DN 3 400; DN 3 600; DN 3 800; DN 4 000.

DN 750 and DN 1 050 are used only for Class 150 and Class 300.

Intermediate DNs are allowed upon agreement between manufacturer and customer.

For valves subject to European legislation on pressure equipment, EN 16668 applies together with this European Standard.

For industrial process control valves, EN 1349 and EN 60534-2-1 apply together with this European Standard.

For water supply application, EN 1074-1 and EN 1074-2 apply together with this European Standard.

NOTE 1 Butterfly valves for water supply application do not comply with Annex ZA and are not CE marked because they are excluded from the pressure equipment European legislation.

NOTE 2 The range of DN, applicable to each PN, for wafer and wafer lug valve types is as given in the appropriate part of EN 1092 for Type 11 flanges for the applicable material. The range of DN, applicable to each PN, for flanged valve types is as given in the appropriate part of EN 1092 for Type 21 flanges for the applicable material.

The correspondence between DN and NPS is given for information in Annex D.

2 Normative references

The following documents, in whole or in part, are normatively referenced in this document and are indispensable for its application. For dated references, only the edition cited applies. For undated references, the latest edition of the referenced document (including any amendments) applies.

EN 19:2016, *Industrial valves — Marking of metallic valves*

EN 558:2017, *Industrial valves — Face-to-face and centre-to-face dimensions of metal valves for use in flanged pipe systems — PN and Class designated valves*

EN 736-1:1995, *Valves — Terminology — Part 1: Definition of types of valves*

EN 736-2:2016, *Valves — Terminology — Part 2: Definition of components of valves*

EN 736-3:2008, *Valves — Terminology — Part 3: Definition of terms*

EN 1074-2:2000, *Valves for water supply — Fitness for purpose requirements and appropriate verification tests — Part 2: Isolating valves*

AVA Documents
Document Sharing Hub

Full document details: BS EN 593:2017

EN 1092-1:2007+A1:2013, *Flanges and their joints — Circular flanges for pipes, valves, fittings and accessories, PN designated — Part 1: Steel flanges*

EN 1092-2:1997, *Flanges and their joints — Circular flanges for pipes, valves, fittings and accessories, PN designated — Part 2: Cast iron flanges*

EN 1092-3:2003, *Flanges and their joints — Circular flanges for pipes, valves, fittings and accessories, PN designated — Part 3: Copper alloy flanges*

EN 1092-4:2002, *Flanges and their joints — Circular flanges for pipes, valves, fittings and accessories, PN designated — Part 4: Aluminium alloy flanges*

EN 1267:2012, *Industrial valves — Test of flow resistance using water as test fluid*

EN 1759-1:2004, *Flanges and their joint — Circular flanges for pipes, valves, fittings and accessories, Class designated — Part 1: Steel flanges, NPS 1/2 to 24*

EN 1759-3:2003, *Flanges and their joints — Circular flanges for pipes, valves, fittings and accessories, Class designated — Part 3: Copper alloy flanges*

EN 1759-4:2003, *Flanges and their joint — Circular flanges for pipes, valves, fittings and accessories, class designated — Part 4: Aluminium alloy flanges*

EN 10269:2013, *Steels and nickel alloys for fasteners with specified elevated and/or low temperature properties*

EN 12266-1:2012, *Industrial valves — Testing of metallic valves — Part 1: Pressure tests, test procedures and acceptance criteria — Mandatory requirements*

EN 12266-2:2012, *Industrial valves — Testing of metallic valves — Part 2: Tests, test procedures and acceptance criteria — Supplementary requirements*

EN 12516-1:2014, *Industrial valves — Shell design strength — Part 1: Tabulation method for steel valve shells*

EN 12516-2:2014, *Industrial valves — Shell design strength — Part 2: Calculation method for steel valve shells*

EN 12516-3:2002, *Valves — Shell design strength — Part 3: Experimental method*

EN 12516-4:2014, *Industrial valves — Shell design strength — Part 4: Calculation method for valve shells manufactured in metallic materials other than steel*

EN 12570:2000, *Industrial valves — Method for sizing the operating element*

EN 12627:1999, *Industrial valves — Butt welding ends for steel valves*

EN 12982:2009, *Industrial valves — End-to-end and centre-to-end dimensions for butt welding end valves*

EN 16668:2016, *Industrial valves — Requirements and testing for metallic valves as pressure accessories*

EN 60534-2-3:2016, *Industrial-process control valves — Part 2-3: Flow capacity — Test procedures (IEC 60534-2-3:2015)*

EN ISO 1043-1:2011, *Plastics — Symbols and abbreviated terms — Part 1: Basic polymers and their special characteristics (ISO 1043-1:2011)*

EN ISO 5211:2017, *Industrial valves — Part-turn actuator attachments (ISO 5211:2017)*

Documents
Document Sharing Hub

Full document details: BS EN 593:2017

EN ISO 9606-1:2017, *Qualification testing of welders — Fusion welding — Part 1: Steels (ISO 9606-1:2012 including Cor 1:2012 and Cor 2:2013)*

EN ISO 10497:2010, *Testing of valves — Fire type-testing requirements (ISO 10497:2010)*

EN ISO 14732:2013, *Welding personnel — Qualification testing of welding operators and weld setters for mechanized and automatic welding of metallic materials (ISO 14732:2013)*

EN ISO 15607:2003, *Specification and qualification of welding procedures for metallic materials — General rules (ISO 15607:2003)*

ISO 1629:2013, *Rubber and latices — Nomenclature*

ASME B1.1:2003, *Unified Inch Screw Threads, (UN and UNR Thread Form)*

3 Terms and definitions

For the purposes of this document, the terms and definitions given in EN 736-1, EN 736-2, EN 736-3 and the following apply.

3.1
maximum allowable pressure
PS
maximum pressure for which the pressure equipment is designed as specified by the manufacturer

[SOURCE: EN 764-1:2015+A1:2016, 3.2.87]

3.2
maximum allowable temperature
TS_{max}
maximum temperature for which the pressure equipment is designed as specified by the manufacturer

[SOURCE: EN 764-1:2015+A1:2016, 3.1.9]

3.3
end of line service
condition that occurs when the downstream side of the valve is opened to atmosphere

3.4
driving shaft
shaft connected to the obturator to operate the valve in the case of a multi-shaft valve

3.5
trim
parts in contact with the fluid

3.6
eccentration
offset
deviation of the operating axes in respect to the reference axes of the pipe/valve

Documents
Document Sharing Hub
Full document details: BS EN 593:2017

4 Design requirements

4.1 General

Valves subject to pressure equipment European legislation shall comply with the requirements of EN 16668.

The valve shall be of either concentric design (see Figure 1) or eccentric design (see Figures 2 to 4). The offset may be single, double or triple.

A first offset is an axial offset of the shaft to the seat contact.

A second offset is an offset from the pipe centreline to the valve obturator centerline.

In the triple offset design, the seat and seal contact surface centreline is inclined in respect to the pipe / valve centreline, whatever the form of the contact.

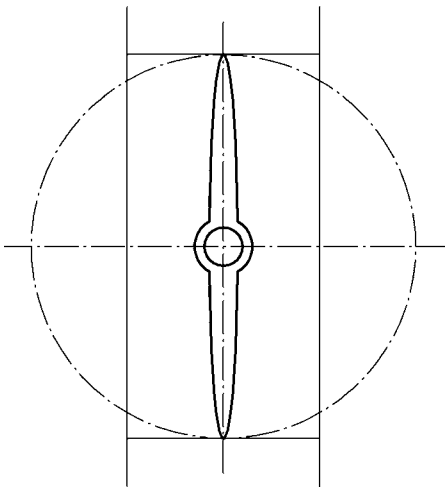

Figure 1 — Concentric design

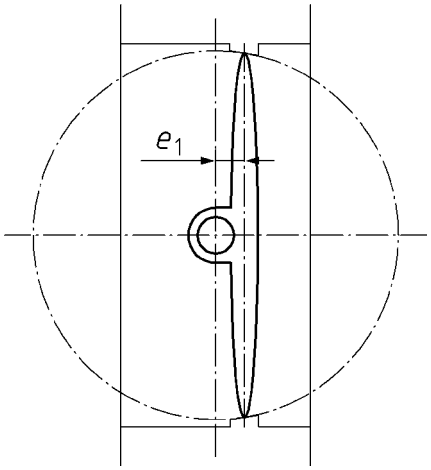

Key

e_1 eccentricity 1

Figure 2 — Single eccentric design (single offset)

Documents
Document Sharing Hub
Full document details: BS EN 593:2017

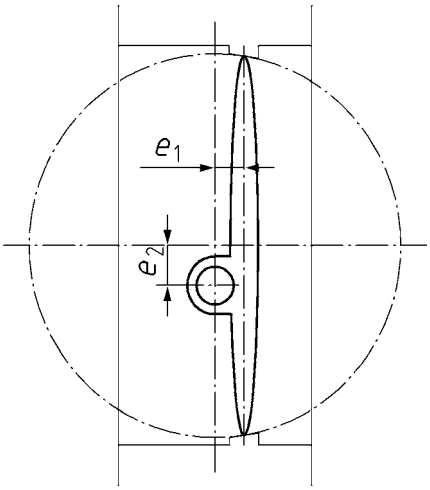

Key

e_1 eccentricity 1

e_2 eccentricity 2

Figure 3 — Double eccentric design (double offset)

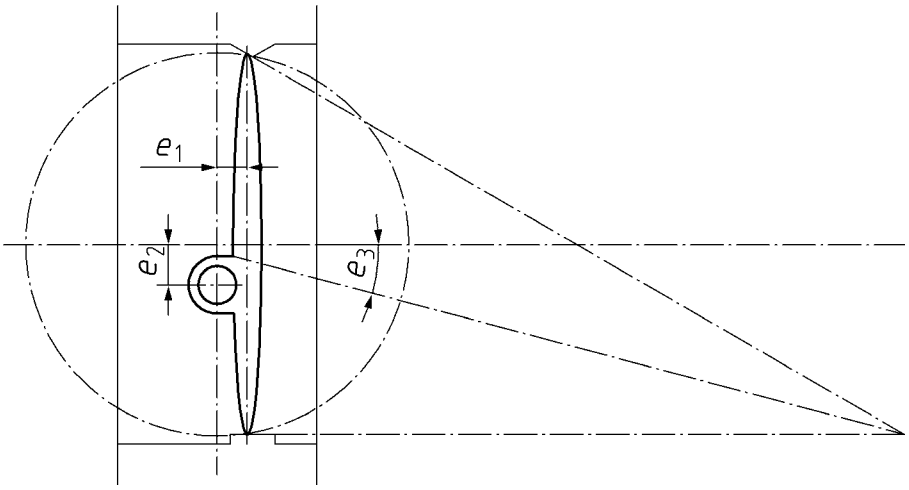

Key

e_1 eccentricity 1

e_2 eccentricity 2

e_3 eccentricity 3

Figure 4 — Triple eccentric design (triple offset)

The design details are the responsibility of the manufacturer.

The butterfly valve may be:

— soft sealing; or

— metallic sealing.

NOTE The choice of design and material depends on the design working temperature and the physical and chemical characteristics of the fluid.

Documents
Document Sharing Hub
Full document details: BS EN 593:2017

4.2 Shell

The shell is the combination of all pressure retaining part:

— the body,

— the retaining elements of the shaft seal ring or the stuffing box;

— the cover and the cover bolting if any,

— if used as end of line, the obturator and the shaft.

4.3 Body

4.3.1 General

Flanges of double flanged valves and single flange wafer valves shall have bolt holes in accordance with the relevant standard as specified in 4.11.2. Threaded holes can be provided where the design of the valve precludes through flange bolting.

Flangeless wafer valves (see Figure 6) are intended for clamping between pipe flanges using through bolting. The shape of wafer valve bodies shall be such that centring of the valves within the appropriate flange bolt circle is ensured. Where through bolting is not practicable due to the valve design, e.g. close to shaft passages, threaded holes can be provided for individual bolting.

Lugged or single flange wafer valves (see Figure 7) are supplied with threaded or through holes for installation between two flanged components or at the end of a pipeline (i.e. end of line service or downstream dismantling).

Threaded holes shall allow full thread engagement to a depth at least equal to the nominal bolt diameter and at least 0,67 of the bolt diameter when the bolt hole is adjacent to the valve shaft.

For Class designed valves threaded body flange holes for bolts 1 inch or less in diameter shall be drilled and tapped in accordance with ASME B1.1, UNC coarse thread series, Class 2B. For bolts 1 1/8 inches or more in diameter, such holes shall be drilled and tapped in accordance with ASME B1.1, UN 8 eight thread series, Class 2B. Threads according to other standards shall be specified.

The manufacturer's literature shall be consulted to determine if through bolting or/and end of line assembly is possible. Any limitation regarding end of line service condition shall be indicated.

Elastomeric or plastic linings and liners can be extended over the flange faces of the body to form a gasket for the flange.

4.3.2 End connections

End connections shall be either one of the following.

a) Double flanged butterfly valve: butterfly valve having double flanged body ends for connection to flanges of adjacent components by individual bolting (see Figure 5).

b) Wafer butterfly valve: butterfly valve intended for clamping between flanges of adjacent components.

NOTE Different body shapes are possible: see Figures 6 and 7 a) to g).

c) Butt welding end butterfly valve: butterfly valve intended for butt welding into a pipeline (see Figure 8).

Documents
Document Sharing Hub

Full document details: BS EN 593:2017