BS EN 60127-2:2014+A1:2023

BSI Standards Publication

Miniature fuses

Part 2: Cartridge fuse-links

Documents
Document Sharing Hub

Full document details: BS EN 60127-2:2014+A1:2023

National foreword

This British Standard is the UK implementation of EN 60127-2:2014+A1:2023. It is identical to IEC 60127-2:2014, incorporating amendment 1:2020. It supersedes BS EN 60127-2:2014, which will be withdrawn on 25 August 2026.

The start and finish of text introduced or altered by amendment is indicated in the text by tags. Tags indicating changes to IEC text carry the number of the IEC amendment. For example, text altered by IEC amendment 1 is indicated by ▌A1⟩ ⟨A1▌.

The UK participation in its preparation was entrusted to Technical Committee PEL/32, Fuses.

A list of organizations represented on this committee can be obtained on request to its committee manager.

Contractual and legal considerations

This publication has been prepared in good faith, however no representation, warranty, assurance or undertaking (express or implied) is or will be made, and no responsibility or liability is or will be accepted by BSI in relation to the adequacy, accuracy, completeness or reasonableness of this publication. All and any such responsibility and liability is expressly disclaimed to the full extent permitted by the law.

This publication is provided as is, and is to be used at the recipient's own risk.

The recipient is advised to consider seeking professional guidance with respect to its use of this publication.

This publication is not intended to constitute a contract. Users are responsible for its correct application.

© The British Standards Institution 2023
Published by BSI Standards Limited 2023

ISBN 978 0 539 01939 1

ICS 29.120.50

Compliance with a British Standard cannot confer immunity from legal obligations.

This British Standard was published under the authority of the Standards Policy and Strategy Committee on 30 November 2014.

Amendments/corrigenda issued since publication

Date	Text affected
30 September 2023	Implementation of IEC amendment 1:2020 with CENELEC endorsement A1:2023

Documents
Document Sharing Hub

Full document details: BS EN 60127-2:2014+A1:2023

EUROPEAN STANDARD

NORME EUROPÉENNE

EUROPÄISCHE NORM

EN 60127-2:2014+A1

August 2023

ICS 29.120.50

Supersedes EN 60127-2:2003

English Version

Miniature fuses - Part 2: Cartridge fuse-links (IEC 60127-2:2014)

Coupe-circuit miniatures - Partie 2: Cartouches (CEI 60127-2:2014)

Geräteschutzsicherungen - Teil 2: Feinsicherungseinsätze (IEC 60127-2:2014)

This European Standard was approved by CENELEC on 2014-10-24. CENELEC members are bound to comply with the CEN/CENELEC Internal Regulations which stipulate the conditions for giving this European Standard the status of a national standard without any alteration.

Up-to-date lists and bibliographical references concerning such national standards may be obtained on application to the CEN-CENELEC Management Centre or to any CENELEC member.

This European Standard exists in three official versions (English, French, German). A version in any other language made by translation under the responsibility of a CENELEC member into its own language and notified to the CEN-CENELEC Management Centre has the same status as the official versions.

CENELEC members are the national electrotechnical committees of Austria, Belgium, Bulgaria, Croatia, Cyprus, the Czech Republic, Denmark, Estonia, Finland, Former Yugoslav Republic of Macedonia, France, Germany, Greece, Hungary, Iceland, Ireland, Italy, Latvia, Lithuania, Luxembourg, Malta, the Netherlands, Norway, Poland, Portugal, Romania, Slovakia, Slovenia, Spain, Sweden, Switzerland, Turkey and the United Kingdom.

European Committee for Electrotechnical Standardization
Comité Européen de Normalisation Electrotechnique
Europäisches Komitee für Elektrotechnische Normung

CEN-CENELEC Management Centre: Avenue Marnix 17, B-1000 Brussels

© 2014 CENELEC All rights of exploitation in any form and by any means reserved worldwide for CENELEC Members.

Ref. No. EN 60127-2:2014 E

AVA Documents Document Sharing Hub

Full document details: BS EN 60127-2:2014+A1:2023

Foreword

The text of document 32C/493/FDIS, future edition 3 of IEC 60127-2, prepared by SC 32C "Miniature fuses" of IEC/TC 32 "Fuses" was submitted to the IEC-CENELEC parallel vote and approved by CENELEC as EN 60127-2:2014.

The following dates are fixed:

• latest date by which the document has to be implemented at national level by publication of an identical national standard or by endorsement	(dop)	2015-07-24
• latest date by which the national standards conflicting with the document have to be withdrawn	(dow)	2017-10-24

This document supersedes EN 60127-2:2003.

Attention is drawn to the possibility that some of the elements of this document may be the subject of patent rights. CENELEC [and/or CEN] shall not be held responsible for identifying any or all such patent rights.

Endorsement notice

The text of the International Standard IEC 60127-2:2014 was approved by CENELEC as a European Standard without any modification.

In the official version, for Bibliography, the following note has to be added for the standard indicated:

IEC 61249-2-7:2002 NOTE Harmonized as EN 61249-2-7:2002 (not modified).

European foreword to Amendment 1

The text of document 32C/587/FDIS, future IEC 60127-2/A1, prepared by SC 32C "Miniature fuses" of IEC/TC 32 "Fuses" was submitted to the IEC-CENELEC parallel vote and approved by CENELEC as EN 60127-2:2014/A1:2023.

The following dates are fixed:

• latest date by which the document has to be implemented at national level by publication of an identical national standard or by endorsement	(dop)	2024-02-25
• latest date by which the national standards conflicting with the document have to be withdrawn	(dow)	2026-08-25

Attention is drawn to the possibility that some of the elements of this document may be the subject of patent rights. CENELEC shall not be held responsible for identifying any or all such patent rights.

Any feedback and questions on this document should be directed to the users' national committee. A complete listing of these bodies can be found on the CENELEC website.

Endorsement notice to Amendment 1

The text of the International Standard IEC 60127-2:2014/A1:2020 was approved by CENELEC as a European Standard without any modification.

AVA Documents
Document Sharing Hub

Full document details: BS EN 60127-2:2014+A1:2023

Annex ZA
(normative)

Normative references to international publications with their corresponding European publications

The following documents, in whole or in part, are normatively referenced in this document and are indispensable for its application. For dated references, only the edition cited applies. For undated references, the latest edition of the referenced document (including any amendments) applies.

NOTE 1 When an International Publication has been modified by common modifications, indicated by (mod), the relevant EN/HD applies.

NOTE 2 Up-to-date information on the latest versions of the European Standards listed in this annex is available here: www.cenelec.eu

Publication	Year	Title	EN/HD	Year
IEC 60068-2-20	-	Environmental testing - Part 2-20: Tests - Test T: Test methods for solderability and resistance to soldering heat of devices with leads	EN 60068-2-20	-
IEC 60068-2-21	2006	Environmental testing - Part 2-21: Tests - Test U: Robustness of terminations and integral mounting devices	EN 60068-2-21	2006
IEC 60127-1 +A1	2006 2011	Miniature fuses - Part 1: Definitions for miniature fuses and general requirements for miniature fuse-links	EN 60127-1 +A1	2006 2011
ISO 3	-	Preferred numbers; Series of preferred numbers	-	-

Documents
Document Sharing Hub

Full document details: BS EN 60127-2:2014+A1:2023

This page is left deliberately blank

Documents
Document Sharing Hub

CONTENTS

INTRODUCTION 6
1 Scope and object 7
2 Normative references 7
3 Terms and definitions 7
4 General requirements 7
5 Standard ratings 7
6 Marking 8
7 General notes on tests 8
8 Dimensions and construction 14
9 Electrical requirements 16
10 Standard sheets 18
Annex A (normative) Miniature fuse-links with wire terminations 38
A.1 General 38
A.2 Scope 38
A.3 General notes on tests 38
A.3.1 Type tests 38
A.3.2 Testing schedule 38
A.3.3 Test bases for tests 39
A.4 Dimensions and construction 41
A.4.1 Dimensions 41
A.4.2 Mechanical tests on terminations 41
A.4.3 Solderability of terminations 42
A.4.4 Resistance to soldering heat 42
A.5 Electrical requirements 42
A.5.1 Voltage drop 43
A.5.2 Time/current characteristic at normal ambient temperature 43
A.5.3 Breaking capacity 43
A.5.4 Fuse-link temperature 43
A1 Annex B (normative) Cartridge fuse-links with DC ratings 44 A1
Bibliography 48

Figure 1 – Test fuse-base for 5 mm × 20 mm and 6,3 mm × 32 mm fuse-links – Rated currents up to and including 6,3 A (see 7.3) 11
Figure 2 – Test fuse-base for 5 mm × 20 mm and 6,3 mm × 32 mm fuse-links – Rated currents exceeding 6,3 A (see 7.3) 12
Figure 3 – Test fuse-base for breaking capacity tests (see 7.3) 13
Figure 4 – Axial pull test apparatus 15
Figure 5 – Alignment gauge (see 8.4) 16
Figure 6 – Typical test circuit for breaking-capacity tests for high-breaking capacity fuse-links (see 9.3) 17

Documents
Document Sharing Hub
Full document details: BS EN 60127-2:2014+A1:2023

Figure 7 – Typical test circuit for breaking-capacity tests for low- and enhanced-breaking capacity fuse-links (see 9.3) 17
Figure A.1 – Test board 39
Figure A.2 – Test base 40
Figure A.3 – Dimensions of fuse-link with wire terminations 41

Table 1 – Testing schedule for individual ampere ratings 9
Table 2 – Testing schedule for maximum ampere rating of a homogeneous series 9
Table 3 – Testing schedule for minimum ampere rating of a homogeneous series 10
Table A.1 – Testing schedule 39

Documents
Document Sharing Hub

Full document details: BS EN 60127-2:2014+A1:2023

INTRODUCTION

According to the wish expressed by the users of miniature fuses, all standards, recommendations and other documents relating to miniature fuses should have the same publication number in order to facilitate reference to fuses in other specifications, for example, equipment specifications.

Furthermore, a single publication number and subdivision into parts would facilitate the establishment of new standards, because clauses and subclauses containing general requirements need not be repeated.

The new IEC 60127 series is thus subdivided as follows:

IEC 60127, *Miniature fuses* (general title).

IEC 60127-1, *Miniature fuses – Part 1: Definitions for miniature fuses and general requirements for miniature fuse-links*

IEC 60127-2, *Miniature fuses – Part 2: Cartridge fuse-links*

IEC 60127-3, *Miniature fuses – Part 3: Sub-miniature fuse-links*

IEC 60127-4, *Miniature fuses – Part 4: Universal modular fuse-links (UMF) – Through-hole and surface mount types*

IEC 60127-5, *Miniature fuses – Part 5: Guidelines for quality assessment of miniature fuse-links*

IEC 60127-6, *Miniature fuses – Part 6: Fuse-holders for miniature fuse-links*

IEC 60127-7, *Miniature fuses – Part 7: Miniature fuse-links for special applications*

IEC 60127-8, (Free for further documents)

IEC 60127-9, (Free for further documents)

IEC 60127-10, *Miniature fuses – Part 10: User guide for miniature fuses*

This Part of IEC 60127 covers additional requirements, test equipment and standard sheets.

The SI system of units is used throughout this standard.

Documents
Document Sharing Hub

Full document details: BS EN 60127-2:2014+A1:2023

MINIATURE FUSES –

Part 2: Cartridge fuse-links

1 Scope and object

This part of IEC 60127 relates to special requirements applicable to cartridge fuse-links for miniature fuses with dimensions measuring 5 mm × 20 mm and 6,3 mm × 32 mm for the protection of electric appliances, electronic equipment and component parts thereof, normally intended for use indoors.

It does not apply to cartridge fuse-links for appliances intended to be used under special conditions, such as in corrosive or explosive atmospheres.

This standard applies in addition to the requirements of IEC 60127-1.

The object of this standard is to define special and additional test methods for cartridge fuse-links applying in addition to the requirements of IEC 60127-1.

2 Normative references

The following documents, in whole or in part, are normatively referenced in this document and are indispensable for its application. For dated references, only the edition cited applies. For undated references, the latest edition of the referenced document (including any amendments) applies.

IEC 60068-2-20, *Environmental testing – Part 2-20: Tests – Test T: Test methods for solderability and resistance to soldering heat of devices with leads*

IEC 60068-2-21:2006, *Environmental testing – Part 2-21: Tests – Test U: Robustness of terminations and integral mounting devices*

IEC 60127-1:2006, *Miniature fuses – Part 1: Definitions for miniature fuses and general requirements for miniature fuse-links*
Amendment 1:2011

ISO 3, *Preferred numbers – Series of preferred numbers*

3 Terms and definitions

For the purposes of this document, the terms and definitions given in IEC 60127-1:2006, Clause 3, apply.

4 General requirements

Clause 4 of IEC 60127-1:2006 applies.

5 Standard ratings

Clause 5 of IEC 60127-1:2006 applies.

Documents
Document Sharing Hub

Full document details: BS EN 60127-2:2014+A1:2023

6 Marking

Clause 6 of IEC 60127-1:2006 applies except as follows:

6.1 *Addition:*

e) A symbol denoting the rated breaking capacity. This symbol shall be placed between the marking for the rated current and the marking for the rated voltage.

These symbols are

H denoting high breaking capacity,

L denoting low breaking capacity,

E denoting enhanced breaking capacity.

EXAMPLES of marking:

T	3	1	5	L	2	5	0	V

		F	4	H	2	5	0	V

T	3	1	5	E	2	5	0	V

6.4 *Add the following paragraph after the first paragraph:*

The values for “d” and “s” shall be 0,8 mm ± 0,2 mm.

7 General notes on tests

Clause 7 of IEC 60127-1:2006 applies except as follows:

7.2.1 *Addition:*

For testing individual fuse ratings, the number of fuse-links required is 48, of which 12 are kept as spares. The testing schedule is shown in Table 1.

For the maximum ampere rating of a homogeneous series, the number of fuse-links required is 48, of which 22 are kept as spares. The testing schedule is shown in Table 2.

For the minimum ampere rating of a homogeneous series the number of fuse-links required is 33, of which 16 are kept as spares. The testing schedule is shown in Table 3.

Documents
Document Sharing Hub

Full document details: BS EN 60127-2:2014+A1:2023

Table 1 – Testing schedule for individual ampere ratings

Sub-clause	Description		Fuse-link no.														
			1-6	7 9 11	8 10 13	12 14 15	16 17 18	19 20 21	22 24 26	23 25 27	28 29 30	31 32 33	34 36 38	35 37 39	40 41 42	43 44 45	46 47 48
9.4 [a]	Endurance test		X														
9.2.2 [a]	Test at elevated temperature [b]						X										
9.2.1 [a]	Time/current characteristics	10 I_N		X													
		4 I_N							X								
		2,75 I_N											X				
		2,0 I_N or 2,1 I_N														X	
9.3	Breaking capacity test: Rated breaking capacity					X											
	5 times the rated current							X									
	10 times the rated current										X						
	50 times the rated current											X					
	250 times the rated current														X		
8.3	Terminations (end cap test)			X					X				X			X	
8.5 [a]	Soldered joints		X	X			X		X				X			X	
6.2 [a]	Legibility and indelibility of marking			X					X				X			X	

[a] These subclauses are to be found in IEC 60127-1.

[b] Applicable only when specified on the standard sheet.

Table 2 – Testing schedule for maximum ampere rating of a homogeneous series

Sub-clause	Description		Fuse-link numbers in decreasing value of voltage drop											
			1-6	7 8 9	10 11 12	13-17	18-27	28 29 30	31 32 33	34 35 36	37 38 39	40 41 42	43 44 45	46 47 48
9.4 [a]	Endurance test		X											
9.2.2 [a]	Test at elevated temperature [b]							X						
9.2.1 [a]	Time/current characteristics	10 I_N		X										
		4 I_N							X					
		2,75 I_N									X			
		2,0 I_N or 2,1 I_N											X	
9.3	Rated breaking capacity					X								
8.3	Terminations (end cap test)			X					X		X		X	
8.5 [a]	Soldered joints		X	X				X	X		X		X	
6.2 [a]	Legibility and indelibility of marking			X					X		X		X	

[a] These subclauses are to be found in IEC 60127-1.

[b] Applicable only when specified on the standard sheet.

Documents
Document Sharing Hub

Full document details: BS EN 60127-2:2014+A1:2023

Table 3 – Testing schedule for minimum ampere rating of a homogeneous series

Sub-clause	Description		Fuse-link numbers in decreasing value of voltage drop						
			1-6	7 8 9	10 11 12	13-17	18-27	28 29 30	31 32 33
9.4 [a]		Endurance test	X						
9.2.1 [a]	Time/current characteristics	10 I_N		X					
		2,0 I_N or 2,1 I_N						X	
9.3		Rated breaking capacity				X			
[a] These subclauses are to be found in IEC 60127-1.									

Replacement:

7.3 Fuse-bases for tests

For tests that require a fuse-base for mounting the fuse-links, bases according to Figures 1, 2 or 3, shall be used as appropriate.

The contact resistance between each contact and a silvered brass piece having the same nominal dimensions and shape as the fuse-link to be tested shall not exceed 3 mΩ and is measured under the following conditions:

a) in order to prevent the breakdown of thin insulating layers on the contacts, the e.m.f. of the circuit shall not exceed 20 mV (d.c. or a.c. peak);

b) in order to prevent undue heating of the contacts, the current flowing shall not exceed 1 A.

Metal parts of the fuse-base, except the spring and connections, shall be made of brass. Brass parts of the fuse-base and of the gauge for measuring contact resistance shall have a copper content of between 58 % and 70 %. Contacts shall be silver-plated.

For fuse-links with rated currents up to and including 6,3 A, a fuse-base according to Figure 1 shall be used. The contact force shall be between 4 N and 6 N. The flexible lead and terminal wires shall be of copper and shall have a cross-sectional area of 1 mm^2; the length of each of the terminal wires being approximately 500 mm.

For fuse-links with rated currents exceeding 6,3 A, a fuse-base according to Figure 2 shall be used. The contact force shall be between 8 N and 12 N. The flexible lead and terminal wires shall be of copper and shall have a cross-sectional area of 6 mm^2; the length of each of the terminal wires being approximately 500 mm.

For breaking capacity tests, a fuse-base according to Figure 3, with the same contact force and conductor cross-sectional area as for the base in Figure 2, shall be used.

Documents
Document Sharing Hub
Full document details: BS EN 60127-2:2014+A1:2023

Dimensions in millimetres with tolerance of 0,1 mm

Fuse-links	*a* mm	*b* mm
5 mm × 20 mm	20	48
6,3 mm × 32 mm	32	60

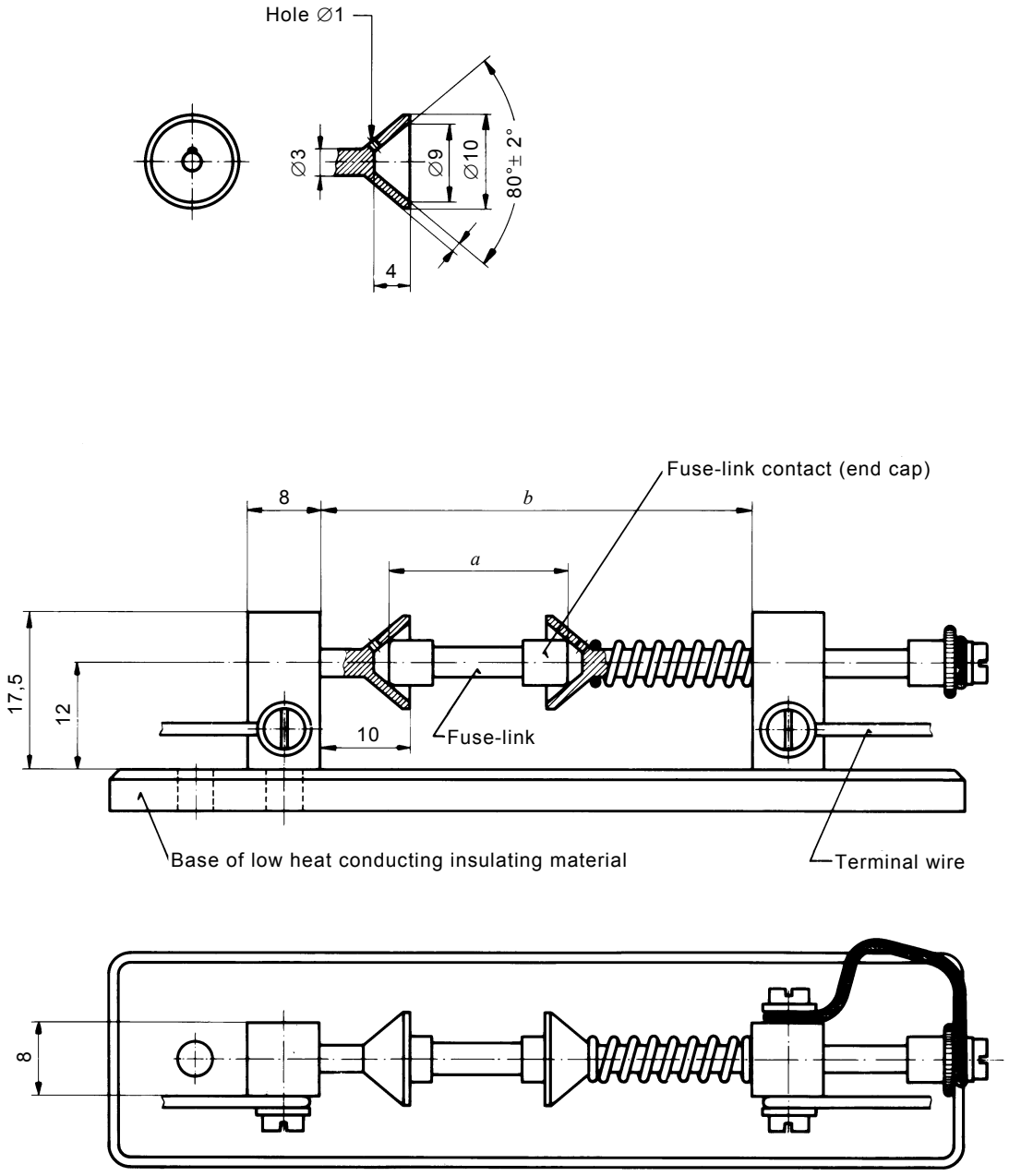

Figure 1 – Test fuse-base for 5 mm × 20 mm and 6,3 mm × 32 mm fuse-links – Rated currents up to and including 6,3 A

Documents
Document Sharing Hub
Full document details: BS EN 60127-2:2014+A1:2023

Dimensions in millimetres with tolerances of 0,1 mm

Fuse-links	*a* mm	*b* mm
5 mm × 20 mm	20	48
6,3 mm × 32 mm	32	60

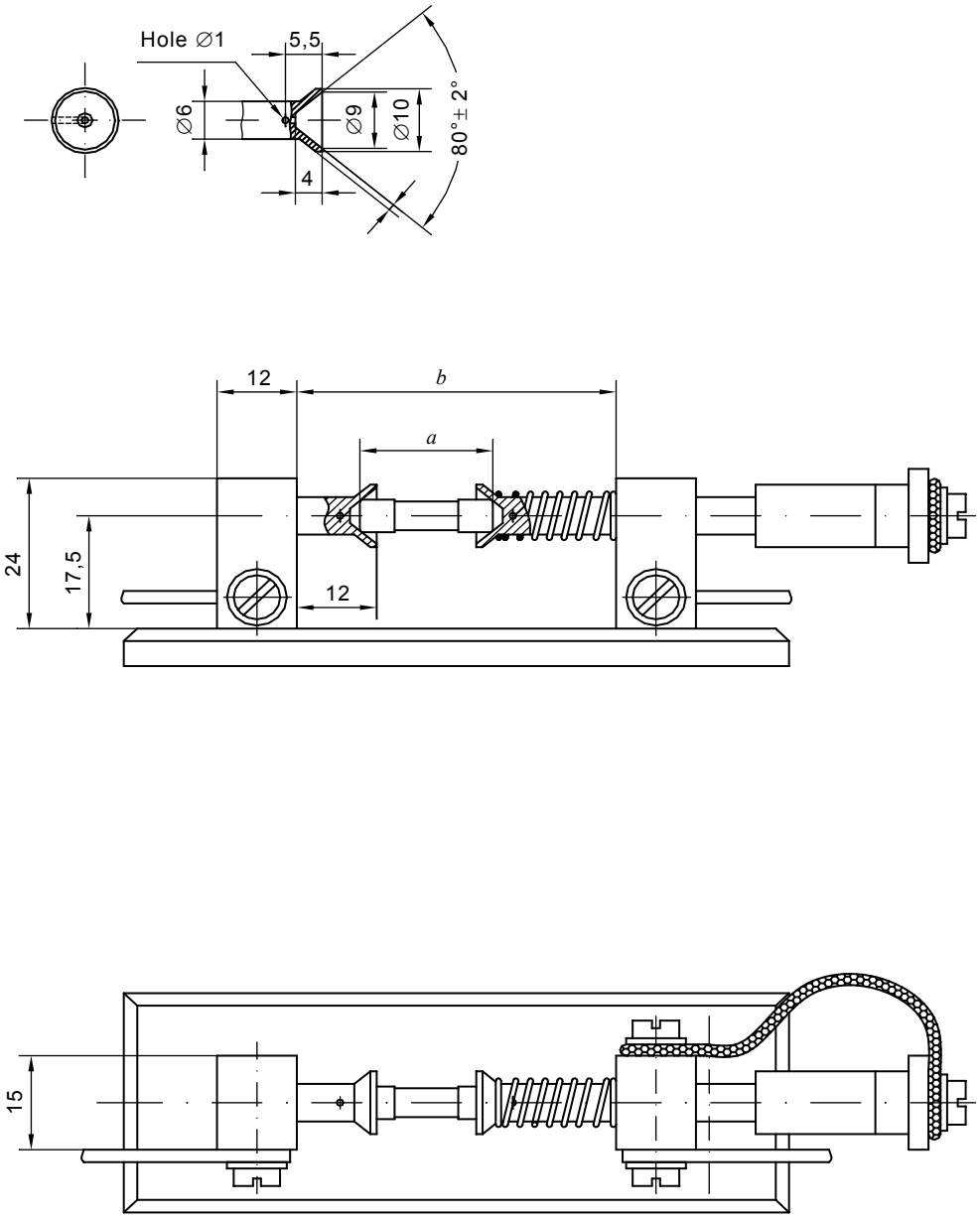

Figure 2 – Test fuse-base for 5 mm × 20 mm and 6,3 mm × 32 mm fuse-links – Rated currents exceeding 6,3 A

Documents
Document Sharing Hub
Full document details: BS EN 60127-2:2014+A1:2023

Dimensions in millimetres with tolerance of 0,1 mm

Fuse-links	*a* mm	*b* mm
5 mm × 20 mm	20	67
6,3 mm × 32 mm	32	79

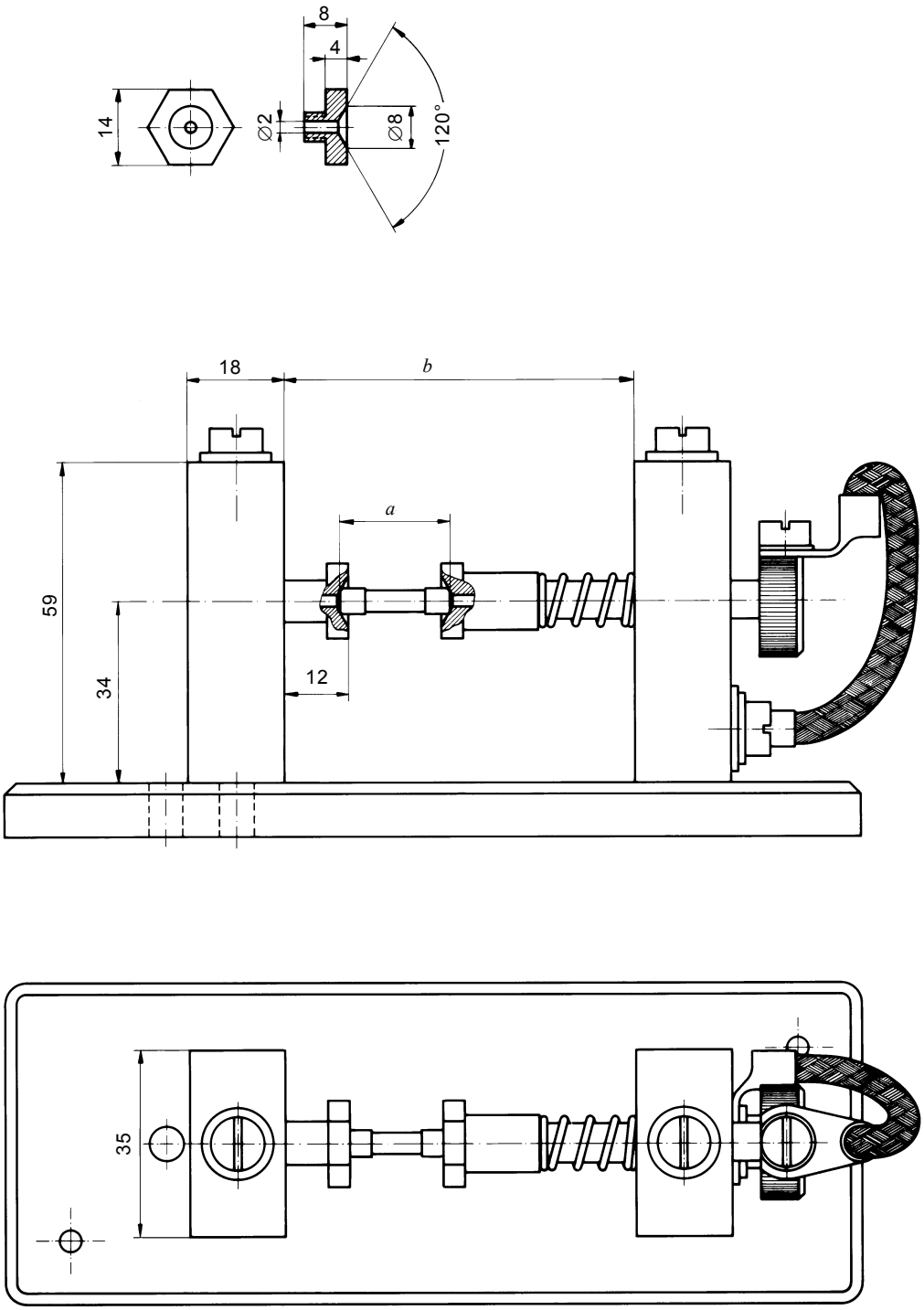

Figure 3 – Test fuse-base for breaking capacity tests

Documents
Document Sharing Hub
Full document details: BS EN 60127-2:2014+A1:2023