BS EN 61784-3-13:2017

BSI Standards Publication

Industrial communication networks - Profiles

Part 3-13: Functional safety fieldbuses - Additional specifications for CPF 13

Documents
Document Sharing Hub

Full document details: BS EN 61784-3-13:2017

National foreword

This British Standard is the UK implementation of EN 61784-3-13:2017. It is identical to IEC 61784-3-13:2016. It supersedes BS EN 61784-3-13:2010, which is withdrawn.

The UK participation in its preparation was entrusted to Technical Committee AMT/7, Industrial communications: process measurement and control, including fieldbus.

A list of organizations represented on this committee can be obtained on request to its secretary.

This publication does not purport to include all the necessary provisions of a contract. Users are responsible for its correct application.

© The British Standards Institution 2018
Published by BSI Standards Limited 2018

ISBN 978 0 580 94720 9

ICS 35.100.05; 25.040.40

Compliance with a British Standard cannot confer immunity from legal obligations.

This British Standard was published under the authority of the Standards Policy and Strategy Committee on 28 February 2018.

Amendments/corrigenda issued since publication

Date	Text affected

Documents
Document Sharing Hub

Full document details: BS EN 61784-3-13:2017

EUROPEAN STANDARD

NORME EUROPÉENNE

EUROPÄISCHE NORM

EN 61784-3-13

December 2017

ICS 25.040.40; 35.100.05

Supersedes EN 61784-3-13:2010

English Version

Industrial communication networks - Profiles - Part 3-13: Functional safety fieldbuses - Additional specifications for CPF 13 (IEC 61784-3-13:2016)

Réseaux de communication industriels - Profils - Partie 3-13: Bus de terrain de sécurité fonctionnelle - Spécifications complémentaires pour CPF 13 (IEC 61784-3-13:2016)

Industrielle Kommunikationsnetze - Profile - Teil 3-13: Funktional sichere Übertragung bei Feldbussen - Zusätzliche Festlegungen für die Kommunikationsprofilfamilie 13 (IEC 61784-3-13:2016)

This European Standard was approved by CENELEC on 2016-08-19. CENELEC members are bound to comply with the CEN/CENELEC Internal Regulations which stipulate the conditions for giving this European Standard the status of a national standard without any alteration.

Up-to-date lists and bibliographical references concerning such national standards may be obtained on application to the CEN-CENELEC Management Centre or to any CENELEC member.

This European Standard exists in three official versions (English, French, German). A version in any other language made by translation under the responsibility of a CENELEC member into its own language and notified to the CEN-CENELEC Management Centre has the same status as the official versions.

CENELEC members are the national electrotechnical committees of Austria, Belgium, Bulgaria, Croatia, Cyprus, the Czech Republic, Denmark, Estonia, Finland, Former Yugoslav Republic of Macedonia, France, Germany, Greece, Hungary, Iceland, Ireland, Italy, Latvia, Lithuania, Luxembourg, Malta, the Netherlands, Norway, Poland, Portugal, Romania, Serbia, Slovakia, Slovenia, Spain, Sweden, Switzerland, Turkey and the United Kingdom.

European Committee for Electrotechnical Standardization
Comité Européen de Normalisation Electrotechnique
Europäisches Komitee für Elektrotechnische Normung

CEN-CENELEC Management Centre: Rue de la Science 23, B-1040 Brussels

© 2017 CENELEC All rights of exploitation in any form and by any means reserved worldwide for CENELEC Members.

Ref. No. EN 61784-3-13:2017 E

AVA Documents Document Sharing Hub

Full document details: BS EN 61784-3-13:2017

European foreword

The text of document 65C/851/FDIS, future edition 2 of IEC 61784-3-13:2016, prepared by SC 65C "Industrial networks", of IEC/TC 65 "Industrial-process measurement, control and automation" was submitted to the IEC-CENELEC parallel vote and approved by CENELEC as EN 61784-3-13:2017.

The following dates are fixed:

- latest date by which this document has to be implemented at national level by publication of an identical national standard or by endorsement (dop) 2018-06-01
- latest date by which the national standards conflicting with this document have to be withdrawn (dow) 2020-12-01

This document supersedes EN 61784-3-13:2010.

Attention is drawn to the possibility that some of the elements of this document may be the subject of patent rights. CENELEC shall not be held responsible for identifying any or all such patent rights.

Endorsement notice

The text of the International Standard IEC 61784-3-13:2016 was approved by CENELEC as a European Standard without any modification.

In the official version, for Bibliography, the following notes have to be added for the standards indicated:

IEC 60204-1	NOTE	Harmonized as EN 60204-1
IEC 61000-6-7	NOTE	Harmonized as EN 61000-6-7
IEC 61131-2	NOTE	Harmonized as EN 61131-2
IEC 61131-6	NOTE	Harmonized as EN 61131-6
IEC 61158 (all parts)	NOTE	Harmonized as EN 61158 (all parts)
IEC 61326-3-1	NOTE	Harmonized as EN 61326-3-1
IEC 61326-3-2	NOTE	Harmonized as EN 61326-3-2
IEC 61496 (all parts)	NOTE	Harmonized as EN 61496 (all parts)
IEC 61508-1:2010	NOTE	Harmonized as EN 61508-1:2010 (not modified).
IEC 61508-4:2010	NOTE	Harmonized as EN 61508-4:2010 (not modified).
IEC 61508-5:2010	NOTE	Harmonized as EN 61508-5:2010 (not modified).
IEC 61511 (all parts)	NOTE	Harmonized as EN 61511 (all parts)
IEC 61784-1	NOTE	Harmonized as EN 61784-1
IEC 61784-5 (all parts)	NOTE	Harmonized as EN 61784-5 (all parts)
IEC 61800-5-2	NOTE	Harmonized as EN 61800-5-2
IEC 62061	NOTE	Harmonized as EN 62061
IEC 62443 (all parts)	NOTE	Harmonized as prEN 62443 (all parts)
IEC/TR 62685	NOTE	Harmonized as CLC/TR 62685
ISO 10218-1	NOTE	Harmonized as EN ISO 10218-1
ISO 12100	NOTE	Harmonized as EN ISO 12100
ISO 13849-1	NOTE	Harmonized as EN ISO 13849-1
ISO 13849-2	NOTE	Harmonized as EN ISO 13849-2

Documents
Document Sharing Hub

Full document details: BS EN 61784-3-13:2017

Annex ZA
(normative)
Normative references to international publications with their corresponding European publications

The following documents are referred to in the text in such a way that some or all of their content constitutes requirements of this document. For dated references, only the edition cited applies. For undated references, the latest edition of the referenced document (including any amendments) applies.

NOTE 1 When an International Publication has been modified by common modifications, indicated by (mod), the relevant EN/HD applies.

NOTE 2 Up-to-date information on the latest versions of the European Standards listed in this annex is available here: www.cenelec.eu.

Publication	Year	Title	EN/HD	Year
IEC 61131-3	-	Programmable controllers - Part 3: Programming languages	EN 61131-3	-
IEC 61158-3-13	-	Industrial communication networks - Fieldbus specifications - Part 3-13: Data link layer service definition - Type 13 elements	EN 61158-3-13	-
IEC 61158-4-13	-	Industrial communication networks - Fieldbus specifications - Part 4-13: Data-link layer protocol specification - Type 13 elements	EN 61158-4-13	-
IEC 61158-5-13	-	Industrial communication networks - Fieldbus specifications - Part 5-13: Application layer service definition - Type 13 elements	EN 61158-5-13	-
IEC 61158-6-13	-	Industrial communication networks - Fieldbus specifications - Part 6-13: Application layer protocol specification - Type 13 elements	EN 61158-6-13	-
IEC 61508	series	Functional safety of electrical/electronic/programmable electronic safety-related systems -- Part 1: General requirements	EN 61508	series
IEC 61784-2	-	Industrial communication networks - Profiles - Part 2: Additional fieldbus profiles for real-time networks based on ISO/IEC 8802-3	EN 61784-2	-
IEC 61784-3	-	Industrial communication networks - Profiles - Part 3: Functional safety fieldbuses - General rules and profile definitions	EN 61784-3	-
IEC 61784-5-13	-	Industrial communication networks - Profiles -- Part 5-13: Installation of fieldbuses - Installation profiles for CPF 13	EN 61784-5-13	-
IEC 61918	-	Industrial communication networks - Installation of communication networks in industrial premises	EN 61918	-
ISO/IEC 19501	-	Information technology - Open Distributed Processing - Unified Modeling Language (UML) Version 1.4.2	-	-

Documents
Document Sharing Hub
Full document details: BS EN 61784-3-13:2017

CONTENTS

FOREWORD 13
0 Introduction 15
0.1 General 15
0.2 Patent declaration 17
1 Scope 19
2 Normative references 19
3 Terms, definitions, symbols, abbreviated terms and conventions 20
3.1 Terms and definitions 20
3.1.1 Common terms and definitions 20
3.1.2 CPF 13: Additional terms and definitions 25
3.2 Symbols and abbreviated terms 26
3.2.1 Common symbols and abbreviated terms 26
3.2.2 CPF 13: Additional symbols and abbreviated terms 27
3.3 Conventions 28
3.3.1 Hexadecimal values 28
3.3.2 Binary values 28
3.3.3 Wildcard digits 28
3.3.4 Diagrams 28
4 Overview of FSCP 13/1 (openSAFETY™) 28
4.1 Functional Safety Communication Profile 13/1 28
4.2 Technical overview 29
5 General 29
5.1 External documents providing specifications for the profile 29
5.2 Safety functional requirements 30
5.3 Safety measures 30
5.4 Safety communication layer structure 31
5.5 Relationships with FAL (and DLL, PhL) 33
5.5.1 General 33
5.5.2 Data types 33
6 Safety communication layer services 33
6.1 Modelling 33
6.1.1 Reference model 33
6.1.2 Communication model 34
6.1.3 Device roles and topology 35
6.2 Life cycle model 39
6.2.1 General 39
6.2.2 Concept, planning and implementation 39
6.2.3 Commissioning 40
6.2.4 Operation terms 41
6.2.5 Maintenance terms 43
6.3 Non safety communication layer 43
6.3.1 General 43
6.3.2 Requirements for data transport 43
6.3.3 Domain protection and separation 46
7 Safety communication layer protocol 47

AVA Documents
Document Sharing Hub

Full document details: BS EN 61784-3-13:2017

7.1 Safety PDU format 47
7.1.1 Structure of Safety PDUs 47
7.1.2 Address field (ADR) 50
7.1.3 PDU identification field (ID) 50
7.1.4 Length field (LE) 51
7.1.5 Consecutive Time field (CT) 51
7.1.6 Payload data field (DB0 to DBn) 52
7.1.7 Cyclic Redundancy Check field (CRC-8 / CRC-16) 52
7.1.8 Time Request Address field (TADR) 52
7.1.9 Time Request Distinctive Number field (TR) 52
7.1.10 UDID of SCM coding (UDID of SCM) 52
7.2 Safety Process Data Object (SPDO) 53
7.2.1 General 53
7.2.2 SPDO telegram types 53
7.2.3 Data Only telegram 53
7.2.4 Data with Time Request telegram 54
7.2.5 Data with Time Response telegram 55
7.3 Safety Service Data Object (SSDO) 56
7.3.1 General 56
7.3.2 SSDO telegram types 56
7.3.3 SSDO services and protocols 57
7.3.4 SSDO Download Initiate 59
7.3.5 SSDO Download Segment 60
7.3.6 SSDO Block Download Initiate 61
7.3.7 SSDO Block Download Segment 62
7.3.8 SSDO Upload Initiate 64
7.3.9 SSDO Upload Segment 65
7.3.10 SSDO Block Upload Initiate 66
7.3.11 SSDO Block Upload Segment 67
7.3.12 SSDO Abort 67
7.4 Safety Network Management (SNMT) 69
7.4.1 General 69
7.4.2 SNMT telegram types 69
7.4.3 SNMT services and protocols 69
7.5 Safety Object dictionary (SOD) 81
7.5.1 General 81
7.5.2 Object dictionary entry definition 81
7.5.3 Data type entry specification 87
7.5.4 Object description 88
7.6 Safety related PDO mapping 123
7.6.1 General 123
7.6.2 Transmit SPDOs 124
7.6.3 Receive SPDOs 124
7.6.4 SPDO mapping parameter 124
7.6.5 SPDO mapping example 125
7.6.6 SPDO error handling 127
7.7 State and sequence diagrams 127
7.7.1 Safety Process Data Object (SPDO) 127
7.7.2 Time synchronization and validation 132

AVA Documents
Document Sharing Hub

Full document details: BS EN 61784-3-13:2017

7.7.3 Safety Service Data Object (SSDO) ... 141
7.7.4 SOD access ... 143
7.7.5 Safety Network Management Object (SNMT) ... 153
7.7.6 SN power up ... 155
7.7.7 SN power down ... 159
7.7.8 SN recovery after Restart / Error ... 159
7.7.9 SCM power up ... 159
7.7.10 Address verification ... 162
7.7.11 Commissioning mode ... 164
7.7.12 Handle single UDID mismatch ... 164
7.7.13 Activate SN ... 168
7.7.14 Device exchange ... 169
8 Safety communication layer management ... 169
8.1 General ... 169
8.2 Goals of parameterization ... 169
8.3 Initial configuration of a device ... 169
8.3.1 General ... 169
8.3.2 SD setup by only configuring the SCM ... 170
8.3.3 SD setup configuring each SN ... 170
8.4 Avoiding of parameterizing the wrong device ... 170
8.5 Parameter check mechanism ... 170
9 System requirements ... 171
9.1 Indicators and switches ... 171
9.2 Installation guidelines ... 171
9.3 Safety function response time ... 171
9.4 Duration of demands ... 172
9.5 Constraints for calculation of system characteristics ... 172
9.5.1 General ... 172
9.5.2 Number of sinks limit ... 172
9.5.3 Message rate limit ... 172
9.5.4 Message payload limit ... 172
9.5.5 Bit error rate considerations ... 173
9.5.6 Residual error rate ... 173
9.6 Maintenance ... 174
9.6.1 Diagnostic information ... 174
9.6.2 Replacement of safety related devices ... 174
9.6.3 Modification ... 175
9.6.4 Machine part changing ... 175
9.6.5 Firmware update of safety related nodes ... 175
9.6.6 Machine check due to service interval ... 175
9.7 Safety manual ... 175
10 Assessment ... 175
10.1 General ... 175
10.2 CP 13/1 assessment ... 176
10.3 FSCP 13/1 conformance test ... 176
10.4 Approval of functional safety by competent assessment body ... 176
Annex A (informative) Additional information for functional safety communication profiles of CPF 13 ... 177
A.1 Hash function calculation ... 177

Documents
Document Sharing Hub
Full document details: BS EN 61784-3-13:2017

A.2 ... 180
Annex B (informative) Information for assessment of the functional safety communication profiles of CPF 13 ... 181
Bibliography ... 182

Figure 1 – Relationships of IEC 61784-3 with other standards (machinery) ... 15
Figure 2 – Relationships of IEC 61784-3 with other standards (process) ... 16
Figure 3 – Producer consumer example ... 29
Figure 4 – Client server example ... 29
Figure 5 – Communication layer structure ... 32
Figure 6 – Safety communication channel ... 33
Figure 7 – Characteristic producer / consumer communication ... 34
Figure 8 – Extended producer / consumer communication ... 35
Figure 9 – Client Server communication ... 35
Figure 10 – Topology overview ... 36
Figure 11 – Safety Domain protection (example) ... 37
Figure 12 – Safety Domain separation (example) ... 38
Figure 13 – Data flow example ... 42
Figure 14 – Communication model ... 43
Figure 15 – SPDO transport ... 44
Figure 16 – SSDO transport ... 45
Figure 17 – Diagnostic data representation ... 46
Figure 18 – Safety PDUs inside a CP 13/1 PDU ... 47
Figure 19 – Basic Safety PDU for n = 0 – 8 octet payload data ... 47
Figure 20 – Basic Safety PDU from 9 octet payload data ... 48
Figure 21 – Slim Safety PDU for n = 0 – 8 octet payload data ... 49
Figure 22 – Slim Safety PDU from 9 octet payload data ... 49
Figure 23 – SPDO_Data_Only telegram ... 54
Figure 24 – SPDO_Data_with_Time_Request telegram ... 54
Figure 25 – SPDO_Data_with_Time_Response telegram ... 55
Figure 26 – SSDO download protocols ... 58
Figure 27 – SSDO upload protocols ... 59
Figure 28 – SSDO Download Initiate protocol ... 59
Figure 29 – SSDO Download Segment protocol ... 60
Figure 30 – SSDO Block Download Initiate protocol ... 61
Figure 31 – SSDO Block Download Segment protocol ... 63
Figure 32 – SSDO Upload Initiate protocol ... 64
Figure 33 – SSDO Upload Segment protocol ... 65
Figure 34 – SSDO Block Upload Initiate protocol ... 66
Figure 35 – SSDO Block Upload Segment protocol ... 67
Figure 36 – SSDO Abort protocol ... 67
Figure 37 – UDID Request / Response protocol ... 70
Figure 38 – SADR Assignment protocol ... 71
Figure 39 – Reset Node Guarding Time protocol ... 72

AVA Documents
Document Sharing Hub

Full document details: BS EN 61784-3-13:2017

Figure 40 – SN set to Pre-Operational protocol 73
Figure 41 – SN set to Operational protocol 74
Figure 42 – SN Acknowledge protocol 76
Figure 43 – SN set to stop protocol 77
Figure 44 – SCM set to Operational protocol 77
Figure 45 – Node Guarding protocol 78
Figure 46 – Additional SADR Assignment protocol 79
Figure 47 – UDID of SCM Assignment protocol 80
Figure 48 – SPDO mapping example 125
Figure 49 – State diagram TxSPDO 128
Figure 50 – SPDO communication producer 128
Figure 51 – State diagram RxSPDO 129
Figure 52 – SPDO communication consumer 130
Figure 53 – State diagram process data 131
Figure 54 – Time synchronization and validation 132
Figure 55 – Time synchronization detail 133
Figure 56 – Calculation of propagation delay 134
Figure 57 – Time validation, propagation delay explanation limits 135
Figure 58 – Time synchronization on a nonsafe network 136
Figure 59 – Explanation of time synchronization 137
Figure 60 – Time synchronization failure 137
Figure 61 – State diagram time synchronization producer 139
Figure 62 – State diagram time synchronization consumer 140
Figure 63 – State diagram SSDO client 142
Figure 64 – State diagram SSDO server 143
Figure 65 – Expedited SOD access 144
Figure 66 – State diagram segmented SOD download access client 145
Figure 67 – Segmented SOD download access 146
Figure 68 – State diagram segmented SOD download access server 147
Figure 69 – State diagram SOD block download access client 149
Figure 70 – SOD block download access 150
Figure 71 – State diagram SOD block download access server 152
Figure 72 – State diagram SNMT master 154
Figure 73 – State diagram SNMT slave 155
Figure 74 – State diagram SN power up 156
Figure 75 – State diagram SN Pre-Operational 157
Figure 76 – State diagram SN Operational 158
Figure 77 – Life Guarding telegram 159
Figure 78 – State diagram SCM power up 160
Figure 79 – State diagram SCM Operational 161
Figure 80 – State diagram SCM address verification 163
Figure 81 – State diagram SCM handle single UDID mismatch 165
Figure 82 – State diagram SCM verify parameters 167

AVA Documents
Document Sharing Hub
Full document details: BS EN 61784-3-13:2017

Figure 83 – State diagram activate SN 168
Figure 84 – Safety function response time 171
Figure 85 – Assessment flow of devices 176

Table 1 – Communication errors and detection measures (cyclic) 30
Table 2 – Communication errors and detection measures (acyclic) 31
Table 3 – Device roles 36
Table 4 – Basic Safety PDU format 48
Table 5 – Slim Safety PDU format 49
Table 6 – PDU identification field (ID) 50
Table 7 – Used ID field combinations 51
Table 8 – Request / response identification 51
Table 9 – Type of CRC depending on LE 51
Table 10 – CRC polynoms for SPDUs 52
Table 11 – SPDO telegram types (ID field, bits 2, 3 and 4) 53
Table 12 – Fields of SPDO_Data_Only telegram 54
Table 13 – Fields of SPDO_Data_with_Time_Request telegram 55
Table 14 – Fields of SPDO_Data_with_Time_Response telegram 55
Table 15 – SSDO telegram types (ID field, bits 2, 3 and 4) 56
Table 16 – SOD Access Command (SACmd) – bit coding 57
Table 17 – Fields of Download Initiate SSDO_Service_Request telegram 60
Table 18 – Fields of Download Initiate SSDO_Service_Response telegram 60
Table 19 – Fields of Download Segment SSDO_Service_Request telegram 61
Table 20 – Fields of Download Segment SSDO_Service_Response telegram 61
Table 21 – Fields of Block Download Initiate SSDO_Service_Request telegram 62
Table 22 – Fields of Block Download Initiate SSDO_Service_Response telegram 62
Table 23 – Fields of Block Download Segment SSDO_Service_Request telegram 63
Table 24 – Fields of Block Download Segment SSDO_Service_Response telegram 63
Table 25 – Fields of Upload Initiate SSDO_Service_Request telegram 64
Table 26 – Fields of Upload Initiate SSDO_Service_Response telegram 64
Table 27 – Fields of Upload Segment SSDO_Service_Request telegram 65
Table 28 – Fields of Upload Segment SSDO_Service_Response telegram 65
Table 29 – Fields of Block Upload Initiate SSDO_Service_Request telegram 66
Table 30 – Fields of Block Upload Initiate SSDO_Service_Response telegram 66
Table 31 – Fields of Block Upload Segment SSDO_Service_Response telegram 67
Table 32 – Fields of SSDO Abort telegram 68
Table 33 – SSDO Abort codes 68
Table 34 – SNMT telegram types (ID field, bits 2, 3 and 4) 69
Table 35 – Fields of SNMT_Request_UDID telegram 70
Table 36 – Fields of SNMT_Response_UDID telegram 70
Table 37 – Fields of SNMT_Assign_SADR telegram 71
Table 38 – Fields of SNMT_SADR_ Assigned telegram 71
Table 39 – Fields of SNMT_SN_reset_guarding_SCM telegram 72

AVA Documents
Document Sharing Hub

Full document details: BS EN 61784-3-13:2017

Table 40 – SNMT request telegram types 72
Table 41 – SNMT response telegram types 73
Table 42 – Fields of SNMT_SN_set_to_PRE_OP telegram 73
Table 43 – Fields of SNMT_SN_status_PRE_OP telegram 74
Table 44 – Fields of SNMT_SN_set_to_OP telegram 74
Table 45 – Fields of SNMT_SN_status_OP telegram 75
Table 46 – Fields of SNMT_SN_busy telegram 75
Table 47 – Fields of SNMT_SN_FAIL telegram 75
Table 48 – SNMT_SN_FAIL Error Group values 76
Table 49 – SNMT_SN_FAIL Error Code values 76
Table 50 – Fields of SNMT_SN_ACK telegram 76
Table 51 – Fields of SNMT_SCM_set_to_STOP telegram 77
Table 52 – Fields of SNMT_SCM_set_to_OP telegram 78
Table 53 – Fields of SNMT_SCM_guard_SN telegram 78
Table 54 – Fields of SNMT_SN_status_OP/SNMT_SN_status_OP telegrams 79
Table 55 – Fields of SNMT_assign_additional_SADR telegram 79
Table 56 – Fields of SNMT_assigned_additional_SADR telegram 80
Table 57 – Fields of SNMT_assign_UDID_of_SCM telegram 80
Table 58 – Fields of SNMT_assigned_UDID_of_SCM telegram 81
Table 59 – Object type definition 82
Table 60 – Access attributes for data objects 83
Table 61 – SPDO mapping attributes for data objects 84
Table 62 – Basic data type object definition example 84
Table 63 – Compound data type object definition example 84
Table 64 – Sub index interpretation 85
Table 65 – NumberOfEntries sub index specification 85
Table 66 – RECORD type object sub index specification 85
Table 67 – ARRAY type object sub index specification 86
Table 68 – StructureOfObject encoding 86
Table 69 – Object dictionary data types 87
Table 70 – 0021h Compound data type description example 88
Table 71 – 0021h Compound sub index descriptions example 88
Table 72 – Standard objects 89
Table 73 – Common communication objects 89
Table 74 – Receive SPDO communication objects 89
Table 75 – Receive SPDO mapping objects 90
Table 76 – Transmit SPDO communication objects 90
Table 77 – User parameter (writeable at any time) 90
Table 78 – Transmit SPDO mapping objects 90
Table 79 – SADR DVI list 91
Table 80 – Additional SADR list 91
Table 81 – SADR UDID list 91
Table 82 – Object 1001h Error Register 92

AVA Documents
Document Sharing Hub

Table 83 – Object 1001h Error Register value interpretation 92
Table 84 – Object 1002h Manufacturer status register 92
Table 85 – Object 1003h Pre defined error field 93
Table 86 – Object 1003h sub index 00h 93
Table 87 – Object 1003h sub index 01h 93
Table 88 – Object 1003h sub index 02h to FEh 94
Table 89 – Object 100Ch Life Guarding 94
Table 90 – Object 100Ch sub index 00h 94
Table 91 – Object 100Ch sub index 01h 95
Table 92 – Object 100Ch sub index 02h 95
Table 93 – Object 100Dh Refresh Interval of Reset Guarding 95
Table 94 – Object 100Dh Refresh Interval of Reset Guarding 96
Table 95 – Object 1018h Device Vendor Information 96
Table 96 – Object 1018h sub index 00h 97
Table 97 – Object 1018h sub index 01h 97
Table 98 – Object 1018h sub index 02h 97
Table 99 – Object 1018h sub index 03h 98
Table 100 – Object 1018h sub index 04h 98
Table 101 – Object 1018h sub index 05h 98
Table 102 – Object 1018h sub index 06h 99
Table 103 – Object 1018h sub index 07h 99
Table 104 – Structure of Revision Number 99
Table 105 – Structure of parameter checksum domain 100
Table 106 – CRC polynom for parameter checksum 100
Table 107 – Object 1019h Unique Device ID 101
Table 108 – Object 101Ah Parameter Download 101
Table 109 – Format of Parameter Download 101
Table 110 – Object 101Bh SCM Parameters 102
Table 111 – Object 101Bh sub index 00h 102
Table 112 – Object 101Bh sub index 01h 102
Table 113 – Object 1200h Common Communication Parameter 103
Table 114 – Object 1200h sub index 00h 103
Table 115 – Object 1200h sub index 01h 103
Table 116 – Object 1200h sub index 02h 103
Table 117 – Object 1200h sub index 03h 104
Table 118 – Object 1200h sub index 04h 104
Table 119 – Object 1201h SSDO Communication Parameter 105
Table 120 – Object 1201h sub index 00h 105
Table 121 – Object 1201h sub index 01h 105
Table 122 – Object 1201h sub index 02h 105
Table 123 – Object 1202h SNMT Communication Parameter 106
Table 124 – Object 1202h sub index 00h 106
Table 125 – Object 1202h sub index 01h 106

AVA Documents
Document Sharing Hub

Full document details: BS EN 61784-3-13:2017

Table 126 – Object 1202h sub index 02h 107
Table 127 – Object 1400h – 17FEh RxSPDO Communication Parameter 107
Table 128 – Object 1400h – 17FEh sub index 00h 107
Table 129 – Object 1400h – 17FEh sub index 01h 108
Table 130 – Object 1400h – 17FEh sub index 02h 108
Table 131 – Object 1400h – 17FEh sub index 03h 108
Table 132 – Object 1400h – 17FEh sub index 04h 109
Table 133 – Object 1400h – 17FEh sub index 05h 109
Table 134 – Object 1400h – 17FEh sub index 06h 109
Table 135 – Object 1400h – 17FEh sub index 07h 110
Table 136 – Object 1400h – 17FEh sub index 08h 110
Table 137 – Object 1400h – 17FEh sub index 09h 110
Table 138 – Object 1400h – 17FEh sub index 0Ah 111
Table 139 – Object 1400h – 17FEh sub index 0Bh 111
Table 140 – Object 1400h – 17FEh sub index 0Ch 111
Table 141 – Object 1800h – 1BFEh RxSPDO communication parameter 112
Table 142 – Object 1800h – 1BFEh sub index 00h 112
Table 143 – Object 1800h – 1BFEh sub index 01h 112
Table 144 – Object 1800h – 1BFEh sub index 02h – FEh 112
Table 145 – 1Object C00h – 1FFEh TxSPDO communication parameter 113
Table 146 – Object 1C00h – 1FFEh sub index 00h 113
Table 147 – Object 1C00h – 1FFEh sub index 01h 113
Table 148 – Object 1C00h – 1FFEh sub index 02h 114
Table 149 – Object 1C00h – 1FFEh sub index 03h 114
Table 150 – Object C000h – C3FEh TxSPDO mapping parameter 115
Table 151 – Object C000h – C3FEh sub index 00h 115
Table 152 – Object C000h – C3FEh sub index 01h 115
Table 153 – Object C000h – C3FEh sub index 02h – FEh 115
Table 154 – Object C400h – C7FEh SADR-DVI list 116
Table 155 – Object C400h – C7FEh sub index 00h 116
Table 156 – Object C400h – C7FEh sub index 01h 116
Table 157 – Object C400h – C7FEh sub index 02h 117
Table 158 – Object C400h – C7FEh sub index 03h 117
Table 159 – Object C400h – C7FEh sub index 04h 117
Table 160 – Object C400h – C4FEh sub index 05h 118
Table 161 – Object C400h – C7FEh sub index 06h 118
Table 162 – Object C400h – C7FEh sub index 07h 118
Table 163 – Object C400h – C7FEh sub index 08h 119
Table 164 – Object C400h – C7FEh sub index 09h 119
Table 165 – Object C400h – C7FEh sub index 0Ah 119
Table 166 – Object C400h – C7FEh sub index 0Bh 120
Table 167 – Object C400h – C7FEh sub index 0Ch 120
Table 168 – Bit field of optional features 120

AVA Documents
Document Sharing Hub

Table 169 – Object C400h – C7FEh sub index 0Dh 120
Table 170 – Object C801h – CBFFh Additional SADR list 121
Table 171 – Object C801h – CBFFh sub index 00h 121
Table 172 – Object C801h – CBFFh sub index 01h 121
Table 173 – Object C801h – CBFFh sub index 02h 122
Table 174 – Object Additional SADR List Example 122
Table 175 – Object CC01h – CFFFh SADR-UDID list 123
Table 176 – Object CC01h – CFFFh sub index 00h 123
Table 177 – Object CC01h – CFFFh sub index 01h – FEh 123
Table 178 – SADR-UDID List Example 123
Table 179 – Structure of SPDO mapping entry 125
Table 180 – Mapping example table 1 126
Table 181 – Mapping example table 2 126
Table 182 – Mapping example table 3 126
Table 183 – Mapping example table 4 126
Table 184 – Mapping example table 5 126
Table 185 – Mapping example table 6 127
Table 186 – Mapping example table 7 127
Table 187 – SPDO communication producer item description 128
Table 188 – SPDO communication producer state description 129
Table 189 – SPDO communication consumer item description 130
Table 190 – SPDO communication consumer state description 130
Table 191 – SPDO communication consumer telegram validation item description 131
Table 192 – SPDO communication consumer telegram validation state description 132
Table 193 – Time synchronization item description 133
Table 194 – Time validation item description 135
Table 195 – Extended time synchronization item description 138
Table 196 – Time synchronization producer item description 139
Table 197 – Time synchronization producer state description 139
Table 198 – Time synchronization consumer item description 141
Table 199 – Time synchronization consumer state description 141
Table 200 – SSDO client item description 142
Table 201 – SSDO client state description 142
Table 202 – SSDO server state description 143
Table 203 – SOD access item description 144
Table 204 – Segmented SOD access client item description 146
Table 205 – Segmented SOD download access client state description 146
Table 206 – Segmented SOD access server item description 148
Table 207 – Segmented SOD access server state description 148
Table 208 – SOD block download access client item description 150
Table 209 – SOD block download access client state description 150
Table 210 – SOD block download access server item description 153
Table 211 – SOD block download access server state description 153

AVA Documents
Document Sharing Hub

Full document details: BS EN 61784-3-13:2017

Table 212 – SNMT master item description 154
Table 213 – SNMT master state description 154
Table 214 – SNMT slave state description 155
Table 215 – SN power up state description 156
Table 216 – State and communication object relation 156
Table 217 – SN Pre-Operational state item description 158
Table 218 – SN Pre-Operational state description 158
Table 219 – SN Operational state item description 159
Table 220 – SN Operational state description 159
Table 221 – SCM power up state description 160
Table 222 – State and communication object relation 160
Table 223 – SCM Operational state item description 162
Table 224 – SCM Operational state description 162
Table 225 – Address verification item description 164
Table 226 – Address verification state description 164
Table 227 – SCM handle single UDID mismatch state description 166
Table 228 – SCM verify parameters state description 168
Table 229 – Activate SN state description 169
Table 230 – Residual error rate 173

Documents
Document Sharing Hub

Full document details: BS EN 61784-3-13:2017

INTERNATIONAL ELECTROTECHNICAL COMMISSION

INDUSTRIAL COMMUNICATION NETWORKS – PROFILES –

Part 3-13: Functional safety fieldbuses – Additional specifications for CPF 13

FOREWORD

1) The International Electrotechnical Commission (IEC) is a worldwide organization for standardization comprising all national electrotechnical committees (IEC National Committees). The object of IEC is to promote international co-operation on all questions concerning standardization in the electrical and electronic fields. To this end and in addition to other activities, IEC publishes International Standards, Technical Specifications, Technical Reports, Publicly Available Specifications (PAS) and Guides (hereafter referred to as "IEC Publication(s)"). Their preparation is entrusted to technical committees; any IEC National Committee interested in the subject dealt with may participate in this preparatory work. International, governmental and non-governmental organizations liaising with the IEC also participate in this preparation. IEC collaborates closely with the International Organization for Standardization (ISO) in accordance with conditions determined by agreement between the two organizations.
2) The formal decisions or agreements of IEC on technical matters express, as nearly as possible, an international consensus of opinion on the relevant subjects since each technical committee has representation from all interested IEC National Committees.
3) IEC Publications have the form of recommendations for international use and are accepted by IEC National Committees in that sense. While all reasonable efforts are made to ensure that the technical content of IEC Publications is accurate, IEC cannot be held responsible for the way in which they are used or for any misinterpretation by any end user.
4) In order to promote international uniformity, IEC National Committees undertake to apply IEC Publications transparently to the maximum extent possible in their national and regional publications. Any divergence between any IEC Publication and the corresponding national or regional publication shall be clearly indicated in the latter.
5) IEC itself does not provide any attestation of conformity. Independent certification bodies provide conformity assessment services and, in some areas, access to IEC marks of conformity. IEC is not responsible for any services carried out by independent certification bodies.
6) All users should ensure that they have the latest edition of this publication.
7) No liability shall attach to IEC or its directors, employees, servants or agents including individual experts and members of its technical committees and IEC National Committees for any personal injury, property damage or other damage of any nature whatsoever, whether direct or indirect, or for costs (including legal fees) and expenses arising out of the publication, use of, or reliance upon, this IEC Publication or any other IEC Publications.
8) Attention is drawn to the Normative references cited in this publication. Use of the referenced publications is indispensable for the correct application of this publication.

International Standard IEC 61784-3-13 has been prepared by subcommittee 65C: Industrial networks, of IEC technical committee 65: Industrial-process measurement, control and automation.

This second edition cancels and replaces the first edition published in 2010. This edition constitutes a technical revision. The main changes with respect to the previous edition are listed below:

- change of trade name to openSAFETY™;
- addition of Slim Safety PDU;
- addition of SOD CRC;
- addition of SSDO block transfer services;
- addition of connection valid bit to SPDO;
- addition of number of retries for reset guarding;

AVA Documents
Document Sharing Hub

Full document details: BS EN 61784-3-13:2017

- addition of user parameters that are writeable at any time;
- corrections and editorial improvements.

The text of this standard is based on the following documents:

FDIS	Report on voting
65C/851/FDIS	65C/854/RVD

Full information on the voting for the approval of this standard can be found in the report on voting indicated in the above table.

This publication has been drafted in accordance with the ISO/IEC Directives, Part 2.

A list of all parts of the IEC 61784-3 series, published under the general title *Industrial communication networks – Profiles – Functional safety fieldbuses*, can be found on the IEC website.

The committee has decided that the contents of this publication will remain unchanged until the stability date indicated on the IEC web site under "http://webstore.iec.ch" in the data related to the specific publication. At this date, the publication will be

- reconfirmed,
- withdrawn,
- replaced by a revised edition, or
- amended.

IMPORTANT – The 'colour inside' logo on the cover page of this publication indicates that it contains colours which are considered to be useful for the correct understanding of its contents. Users should therefore print this document using a colour printer.

Documents
Document Sharing Hub

Full document details: BS EN 61784-3-13:2017

0 Introduction

0.1 General

The IEC 61158 fieldbus standard together with its companion standards IEC 61784-1 and IEC 61784-2 defines a set of communication protocols that enable distributed control of automation applications. Fieldbus technology is now considered well accepted and well proven. Thus fieldbus enhancements continue to emerge, addressing applications for areas such as real time, safety-related and security-related applications.

This standard explains the relevant principles for functional safety communications with reference to IEC 61508 series and specifies several safety communication layers (profiles and corresponding protocols) based on the communication profiles and protocol layers of IEC 61784-1, IEC 61784-2 and the IEC 61158 series. It does not cover electrical safety and intrinsic safety aspects.

Figure 1 shows the relationships between this standard and relevant safety and fieldbus standards in a machinery environment.

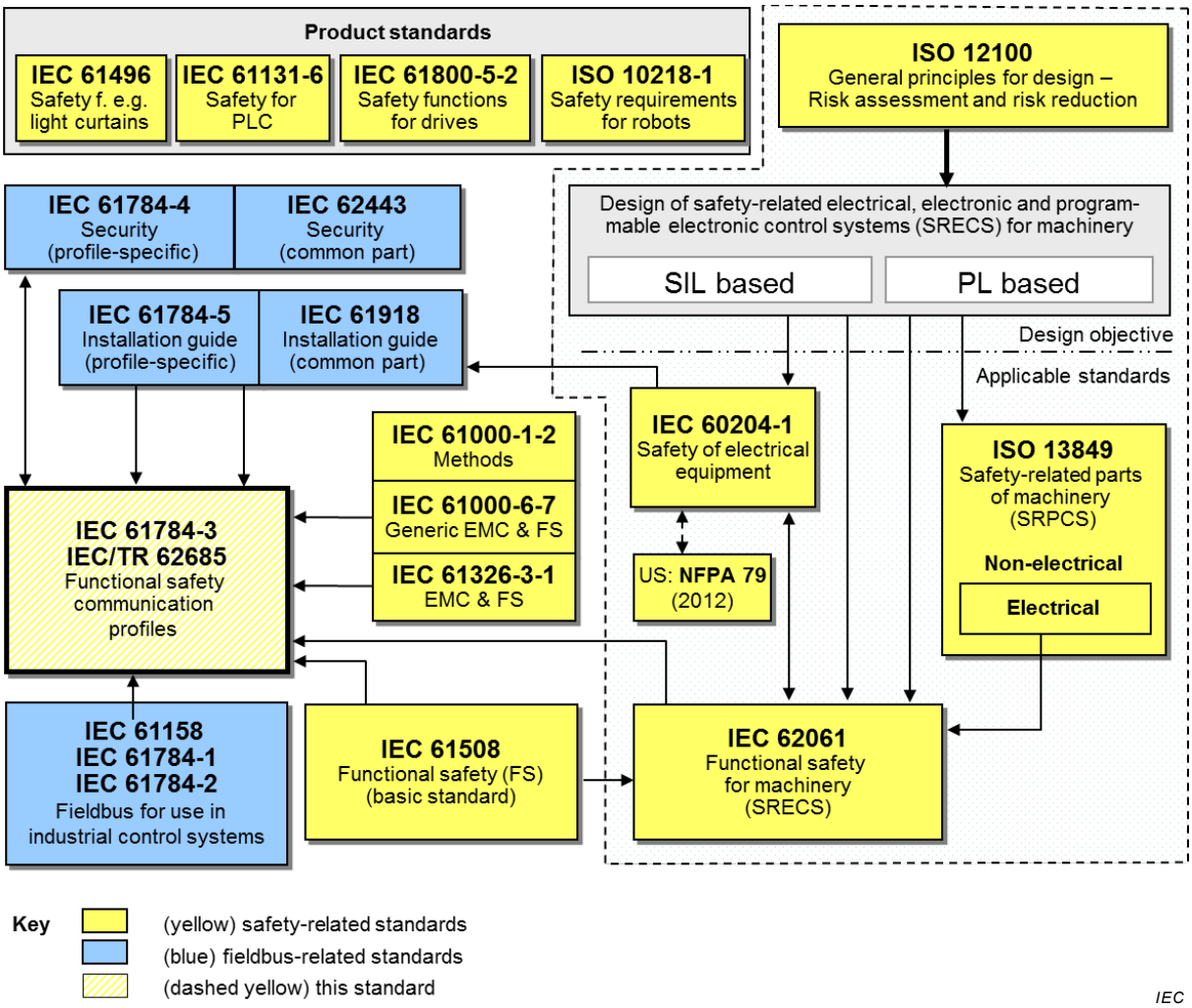

NOTE Subclauses 6.7.6.4 (high complexity) and 6.7.8.1.6 (low complexity) of IEC 62061 specify the relationship between PL (Category) and SIL.

Figure 1 – Relationships of IEC 61784-3 with other standards (machinery)

Documents
Document Sharing Hub
Full document details: BS EN 61784-3-13:2017

Figure 2 shows the relationships between this standard and relevant safety and fieldbus standards in a process environment.

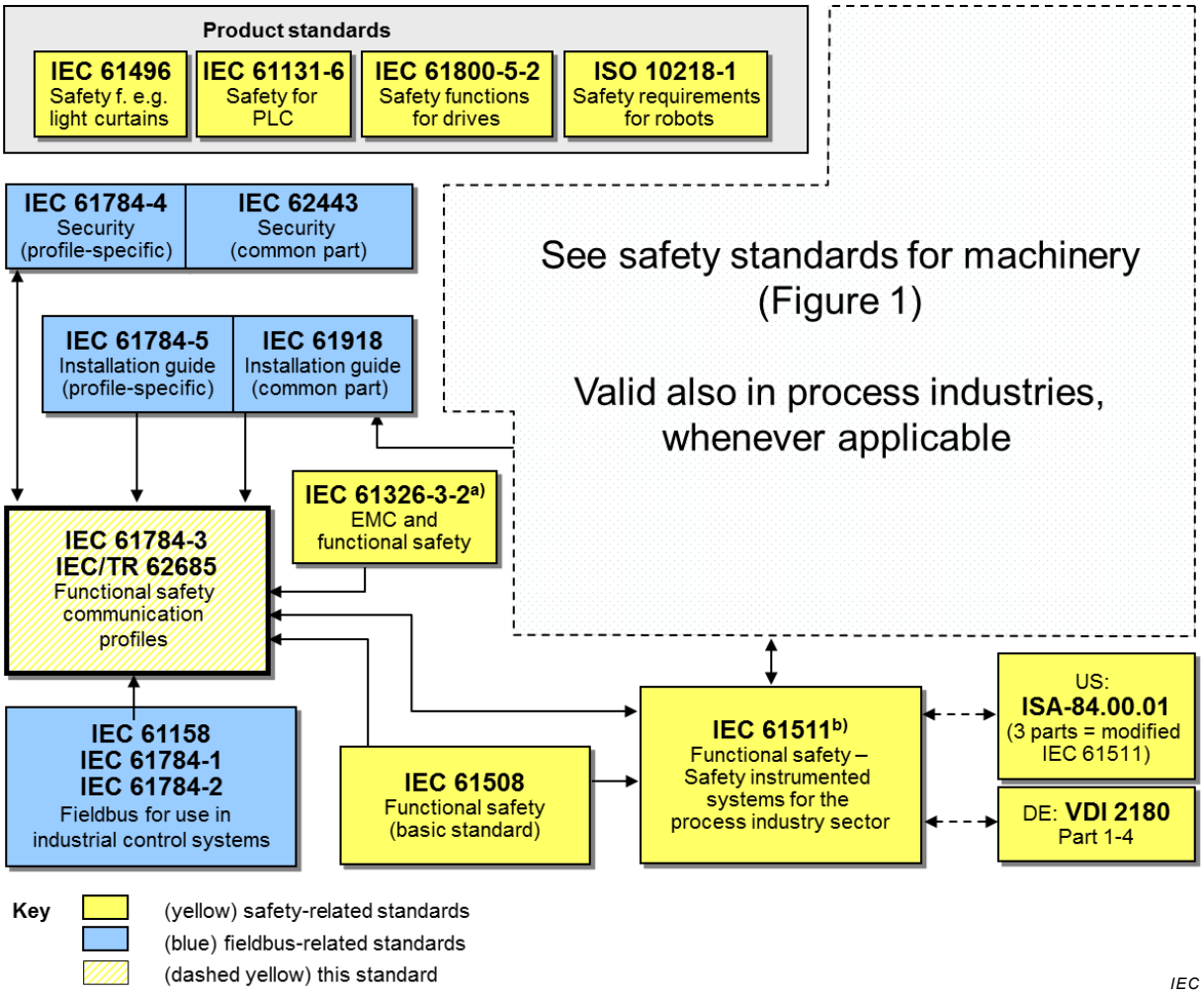

a For specified electromagnetic environments; otherwise IEC 61326-3-1 or IEC 61000-6-7.

b EN ratified.

Figure 2 – Relationships of IEC 61784-3 with other standards (process)

Safety communication layers which are implemented as parts of safety-related systems according to IEC 61508 series provide the necessary confidence in the transportation of messages (information) between two or more participants on a fieldbus in a safety-related system, or sufficient confidence of safe behaviour in the event of fieldbus errors or failures.

Safety communication layers specified in this standard do this in such a way that a fieldbus can be used for applications requiring functional safety up to the Safety Integrity Level (SIL) specified by its corresponding functional safety communication profile.

The resulting SIL claim of a system depends on the implementation of the selected functional safety communication profile (FSCP) within this system – implementation of a functional safety communication profile in a standard device is not sufficient to qualify it as a safety device.

Documents
Document Sharing Hub
Full document details: BS EN 61784-3-13:2017

This standard describes:

- basic principles for implementing the requirements of IEC 61508 series for safety-related data communications, including possible transmission faults, remedial measures and considerations affecting data integrity;
- functional safety communication profiles for several communication profile families in IEC 61784-1 and IEC 61784-2, including safety layer extensions to the communication service and protocols sections of the IEC 61158 series.

0.2 Patent declaration

The International Electrotechnical Commission (IEC) draws attention to the fact that it is claimed that compliance with this document may involve the use of patents concerning the functional safety communication profiles for family 13 as follows, where the [xx] notation indicates the holder of the patent rights:

AT 504739	[BR]	Anordnung und ein Verfahren zur sicheren Datenkommunikation über ein nicht sicheres Netzwerk
DE 102005032877.6	[BR]	Verfahren zur Zeitsynchronisation von Teilnehmern eines Netzwerkes
DE 102004055685.7	[BR]	Verfahren zur Abgrenzung eines sicheren Netzwerkes
DE 102004055684.9	[BR]	Verfahren zur Absicherung des Datentransfers in einem sicheren Netzwerk mit CRC's variabler Länge
EP 08150038.1	[BR]	Anordnung und ein Verfahren zur sicheren Datenkommunikation über ein nicht sicheres Netzwerk

IEC takes no position concerning the evidence, validity and scope of these patent rights.

The holder of these patent rights has assured the IEC that he/she is willing to negotiate licences either free of charge or under reasonable and non-discriminatory terms and conditions with applicants throughout the world. In this respect, the statement of the holder of these patent rights is registered with IEC.

Information may be obtained from:

[BR] Bernecker + Rainer
Industrie-Elektronik Ges.m.b.H.
B&R Strassse 1
5142 Eggelsberg
AUSTRIA

Tel.: +43 7748 6586– 0
Fax.: +43 7748 6586 – 26

Attention is drawn to the possibility that some of the elements of this document may be the subject of patent rights other than those identified above. IEC shall not be held responsible for identifying any or all such patent rights.

Documents
Document Sharing Hub

Full document details: BS EN 61784-3-13:2017

ISO (www.iso.org/patents) and IEC (http://patents.iec.ch) maintain on-line data bases of patents relevant to their standards. Users are encouraged to consult the data bases for the most up to date information concerning patents.

Documents
Document Sharing Hub

Full document details: BS EN 61784-3-13:2017

INDUSTRIAL COMMUNICATION NETWORKS – PROFILES –

Part 3-13: Functional safety fieldbuses – Additional specifications for CPF 13

1 Scope

This part of the IEC 61784-3 series specifies a safety communication layer (services and protocol) based on CPF 13 of IEC 61784-2 and IEC 61158 Type 13. It identifies the principles for functional safety communications defined in IEC 61784-3 that are relevant for this safety communication layer. This safety communication layer is intended for implementation in safety devices only.

NOTE 1 It does not cover electrical safety and intrinsic safety aspects. Electrical safety relates to hazards such as electrical shock. Intrinsic safety relates to hazards associated with potentially explosive atmospheres.

This part[1] defines mechanisms for the transmission of safety-relevant messages among participants within a distributed network using fieldbus technology in accordance with the requirements of IEC 61508 series[2] for functional safety. These mechanisms may be used in various industrial applications such as process control, manufacturing automation and machinery.

This part provides guidelines for both developers and assessors of compliant devices and systems.

NOTE 2 The resulting SIL claim of a system depends on the implementation of the selected functional safety communication profile within this system – implementation of a functional safety communication profile according to this part in a standard device is not sufficient to qualify it as a safety device.

2 Normative references

The following documents, in whole or in part, are normatively referenced in this document and are indispensable for its application. For dated references, only the edition cited applies. For undated references, the latest edition of the referenced document (including any amendments) applies.

IEC 61131-3, *Programmable controllers – Part 3: Programming languages*

IEC 61158-3-13, *Industrial communication networks – Fieldbus specifications – Part 3-13: Data-link layer service definition – Type 13 elements*

IEC 61158-4-13, *Industrial communication networks – Fieldbus specifications – Part 4-13: Data-link layer protocol specification – Type 13 elements*

IEC 61158-5-13, *Industrial communication networks – Fieldbus specifications – Part 5-13: Application layer service definition – Type 13 elements*

IEC 61158-6-13, *Industrial communication networks – Fieldbus specifications – Part 6-13: Application layer protocol specification – Type 13 elements*

---

1 In the following pages of this standard, “this part” will be used for “this part of the IEC 61784-3 series”.

2 In the following pages of this standard, “IEC 61508” will be used for “IEC 61508 series”.

AVA Documents Document Sharing Hub

Full document details: BS EN 61784-3-13:2017

IEC 61508 (all parts), *Functional safety of electrical/electronic/programmable electronic safety-related systems*

IEC 61784-2, *Industrial communication networks – Profiles – Part 2: Additional fieldbus profiles for real-time networks based on ISO/IEC 8802-3*

IEC 61784-3:—[3], *Industrial communication networks – Profiles – Part 3: Functional safety fieldbuses – General rules and profile definitions*

IEC 61784-5-13, *Industrial communication networks – Profiles – Part 5-13: Installation of fielbuses – Installation profiles for CPF 13*

IEC 61918, *Industrial communication networks – Installation of communication networks in industrial premises*

ISO/IEC 19501, *Information technology – Open Distributed Processing – Unified Modeling Language (UML) Version 1.4.2*

3 Terms, definitions, symbols, abbreviated terms and conventions

3.1 Terms and definitions

For the purposes of this document, the following terms and definitions apply.

NOTE Italics are used in the definitions to highlight terms which are themselves defined in 3.1.

3.1.1 Common terms and definitions

NOTE These common terms and definitions are inherited from IEC 61784-3:—.

3.1.1.1
availability
probability for an automated system that for a given period of time there are no unsatisfactory system conditions such as loss of production

3.1.1.2
bit error probability
Pe
probability for a given bit to be received with the incorrect value

3.1.1.3
black channel
defined communication system containing one or more elements without evidence of design or validation according to IEC 61508

Note 1 to entry: This definition expands the usual meaning of channel to include the system that contains the channel.

3.1.1.4
closed communication system
fixed number or fixed maximum number of participants linked by a *communication system* with well-known and fixed properties, and where the *risk* of unauthorized access is considered negligible

[SOURCE: IEC 62280:2014, 3.1.6, modified – transmission replaced by communication]

[3] To be published

Documents
Document Sharing Hub

Full document details: BS EN 61784-3-13:2017

3.1.1.5
communication channel
logical *connection* between two end-points within a *communication system*

3.1.1.6
communication system
arrangement of hardware, software and propagation media to allow the transfer of *messages* (ISO/IEC 7498-1 application layer) from one application to another

3.1.1.7
connection
logical binding between two application objects within the same or different devices

3.1.1.8
Cyclic Redundancy Check
CRC
<value> redundant data derived from, and stored or transmitted together with, a block of data in order to detect data corruption

<method> procedure used to calculate the redundant data

Note 1 to entry: Terms “CRC code” and "CRC signature", and labels such as CRC1, CRC2, may also be used in this standard to refer to the redundant data.

Note 2 to entry: See also [38], [39][4].

3.1.1.9
defined communication system
defined channel
fixed number or fixed maximum number of participants linked by a fieldbus based communication system with well-known and fixed properties, such as installation conditions, electromagnetic immunity, industrial (active) network elements, and where the risk of unauthorized access is reduced to a tolerated level according to the lifecycle model of IEC 62443, using for example zones and conduits

3.1.1.10
error
discrepancy between a computed, observed or measured value or condition and the true, specified or theoretically correct value or condition

Note 1 to entry: Errors may be due to design mistakes within hardware/software and/or corrupted information due to electromagnetic interference and/or other effects.

Note 2 to entry: Errors do not necessarily result in a *failure* or a *fault*.

[SOURCE: IEC 61508-4:2010, 3.6.11 modified – notes added]

3.1.1.11
failure
termination of the ability of a functional unit to perform a required function or operation of a functional unit in any way other than as required

Note 1 to entry: Failure may be due to an *error* (for example, problem with hardware/software design or message disruption).

[SOURCE: IEC 61508-4:2010, 3.6.4, modified – notes and figures replaced]

4 Figures in square brackets refer to the bibliography.

Documents
Document Sharing Hub

Full document details: BS EN 61784-3-13:2017

3.1.1.12
fault
abnormal condition that may cause a reduction in, or loss of, the capability of a functional unit to perform a required function

Note 1 to entry: IEC 60050-191:1990, 191.05.01 defines “fault” as a state characterized by the inability to perform a required function, excluding the inability during preventive maintenance or other planned actions, or due to lack of external resources.

[SOURCE: IEC 61508-4:2010, 3.6.1, modified – figure reference deleted]

3.1.1.13
fieldbus
communication system based on serial data transfer and used in industrial automation or process control applications

3.1.1.14
fieldbus system
system using a *fieldbus* with connected devices

3.1.1.15
frame
denigrated synonym for DLPDU

3.1.1.16
hash function
(mathematical) function that maps values from a (possibly very) large set of values into a (usually) smaller range of values

Note 1 to entry: Hash functions can be used to detect data corruption.

Note 2 to entry: Common hash functions include parity, checksum or CRC.

[SOURCE: IEC TR 62210:2003, 4.1.12, modified – addition of “usually” and notes]

3.1.1.17
hazard
state or set of conditions of a system that, together with other related conditions will inevitably lead to harm to persons, property or environment

3.1.1.18
message
ordered series of octets intended to convey information

[SOURCE: ISO/IEC 2382-16:1996, 16.02.01, modified – character replaced by octet]

3.1.1.19
performance level
PL
discrete level used to specify the ability of safety-related parts of control systems to perform a *safety function* under foreseeable conditions

[SOURCE: ISO 13849-1:2006, 3.1.23]

3.1.1.20
redundancy
existence of more than one means for performing a required function or for representing information

Documents
Document Sharing Hub

Full document details: BS EN 61784-3-13:2017

[SOURCE: IEC 61508-4:2010, 3.4.6, modified – example and notes deleted]

3.1.1.21
reliability
probability that an automated system can perform a required function under given conditions for a given time interval (t1,t2)

Note 1 to entry: It is generally assumed that the automated system is in a state to perform this required function at the beginning of the time interval.

Note 2 to entry: The term "reliability" is also used to denote the reliability performance quantified by this probability.

Note 3 to entry: Within the MTBF or MTTF period of time, the probability that an automated system will perform a required function under given conditions is decreasing.

Note 4 to entry: Reliability differs from *availability*.

[SOURCE: IEC 62059-11:2002, 3.17, modified – use automated system, two notes added]

3.1.1.22
residual error rate
statistical rate at which the SCL *safety measures* fail to detect *errors*

3.1.1.23
risk
combination of the probability of occurrence of harm and the severity of that harm

Note 1 to entry: For more discussion on this concept see Annex A of IEC 61508-5:2010.

[SOURCE: IEC 61508-4:2010, 3.1.6], [SOURCE: ISO/IEC Guide 51:2014, definition 3.9, modified – different note]

3.1.1.24
safety communication channel
communication channel starting at the top of the SCL of the source and ending at the top of the SCL of the sink

Note 1 to entry: It can be modelled as two SCLs connected by a *black channel* or a *defined communication system*, or a *defined channel*.

3.1.1.25
safety communication layer
SCL
communication layer above the FAL that includes all necessary additional measures to ensure safe transmission of data in accordance with the requirements of IEC 61508

3.1.1.26
safety data
data transmitted across a safety network using a safety protocol

Note 1 to entry: The *Safety Communication Layer* does not ensure safety of the data itself, only that the data is transmitted safely.

3.1.1.27
safety device
device designed in accordance with IEC 61508 and which implements the functional safety communication profile

Documents
Document Sharing Hub
Full document details: BS EN 61784-3-13:2017

3.1.1.28
safety function
function to be implemented by an E/E/PE *safety-related system* or other *risk* reduction measures, that is intended to achieve or maintain a safe state for the EUC, in respect of a specific hazardous event

[SOURCE: IEC 61508-4:2010, 3.5.1, modified – references and example deleted]

3.1.1.29
safety function response time
worst case elapsed time following an actuation of a safety sensor connected to a *fieldbus*, until the corresponding safe state of its safety actuator(s) is achieved in the presence of *errors* or *failures* in the *safety function*

Note 1 to entry: This concept is introduced in IEC 61784-3:—, 5.2.4 and addressed by the functional safety communication profiles defined in this part.

3.1.1.30
safety integrity level
SIL
discrete level (one out of a possible four), corresponding to a range of safety integrity values, where safety integrity level 4 has the highest level of safety integrity and safety integrity level 1 has the lowest

Note 1 to entry: The target *failure* measures (see IEC 61508-4:2010, 3.5.17) for the four safety integrity levels are specified in Tables 2 and 3 of IEC 61508-1:2010.

Note 2 to entry: Safety integrity levels are used for specifying the safety integrity requirements of the *safety functions* to be allocated to the E/E/PE *safety-related systems*.

Note 3 to entry: A safety integrity level (SIL) is not a property of a system, subsystem, element or component. The correct interpretation of the phrase "SILn *safety-related system*" (where n is 1, 2, 3 or 4) is that the system is potentially capable of supporting *safety functions* with a safety integrity level up to n.

[SOURCE: IEC 61508-4:2010, 3.5.8]

3.1.1.31
safety measure
<this standard> measure to control possible communication *errors* that is designed and implemented in compliance with the requirements of IEC 61508

Note 1 to entry: In practice, several safety measures are combined to achieve the required *safety integrity level*.

Note 2 to entry: Communication *errors* and related safety measures are detailed in IEC 61784-3:—, 5.3 and 5.4.

3.1.1.32
safety PDU
SPDU
PDU transferred through the *safety communication channel*

Note 1 to entry: The SPDU may include more than one copy of the *safety data* using differing coding structures and *hash functions* together with explicit parts of additional protections such as a key, a sequence count, or a *time stamp* mechanism.

Note 2 to entry: Redundant SCLs may provide two different versions of the SPDU for insertion into separate fields of the *fieldbus frame*.

3.1.1.33
safety-related application
programs designed in accordance with IEC 61508 to meet the SIL requirements of the application

Documents
Document Sharing Hub

Full document details: BS EN 61784-3-13:2017

3.1.1.34
safety-related system
system performing *safety functions* according to IEC 61508

3.1.1.35
slave
passive communication entity able to receive *messages* and send them in response to another communication entity which may be a *master* or a slave

3.1.1.36
time stamp
time information included in a *message*

3.1.2 CPF 13: Additional terms and definitions

3.1.2.1
bit error rate
likelihood of a bit misinterpretation due to electrical noise

3.1.2.2
Device Vendor Information
DVI
information for identifying a *safety node*

3.1.2.3
Safety Address
SADR
address of a *safety node* within a *safety domain*

3.1.2.4
Safety Configuration Manager
SCM
service which is responsible to manage safety related services

Note 1 to entry: Examples of managed safety related services are configuration, parameterization.

3.1.2.5
Safety Node
SN
node with *safety function*

3.1.2.6
Safety Domain
SD
address space for up to 1 023 *safety nodes*

3.1.2.7
Safety Domain Gateway
SDG
gateway to share data between different *safety domains*

3.1.2.8
Safety Domain Number
SDN
identification of a *safety domain*

Documents
Document Sharing Hub

Full document details: BS EN 61784-3-13:2017

3.1.2.9
Safety Network Management
SNMT
services for safety layer management

3.1.2.10
Safety Object Dictionary
SOD
repository of all data objects accessible using services of the functional safety *fieldbus*

3.1.2.11
Safety Process Data Object
SPDO
object for process data exchange between different *safety nodes*

3.1.2.12
Safety Service Data Object
SSDO
object for service data exchange between *safety nodes*

3.1.2.13
initialization
initial *safety node* communication state

3.1.2.14
operational
safety node communication state where all functional safety functions are working properly

3.1.2.15
pre-operational
safety node communication state where all application outputs are in safe state

3.1.2.16
Unique Device Identification
UDID
worldwide unique identification of a device

3.2 Symbols and abbreviated terms

3.2.1 Common symbols and abbreviated terms

CP	Communication Profile	[IEC 61784-1]
CPF	Communication Profile Family	[IEC 61784-1]
CRC	Cyclic Redundancy Check	
DLL	Data Link Layer	[ISO/IEC 7498-1]
DLPDU	Data Link Protocol Data Unit	
EMC	Electromagnetic Compatibility	
EUC	Equipment Under Control	[IEC 61508-4:2010]
E/E/PE	Electrical/Electronic/Programmable Electronic	[IEC 61508-4:2010]
FAL	Fieldbus Application Layer	[IEC 61158-5]
FS	Functional Safety	
FSCP	Functional Safety Communication Profile	
MTBF	Mean Time Between Failures	
MTTF	Mean Time To Failure	
PDU	Protocol Data Unit	[ISO/IEC 7498-1]

Documents
Document Sharing Hub
Full document details: BS EN 61784-3-13:2017

PFH	Average frequency of dangerous failure [h-1] per hour	[IEC 61508-4:2010]
PhL	Physical Layer	[ISO/IEC 7498-1]
PL	Performance Level	[ISO 13849-1]
PLC	Programmable Logic Controller	
SCL	Safety Communication Layer	
SIL	Safety Integrity Level	[IEC 61508-4:2010]
SPDU	Safety PDU	

3.2.2 CPF 13: Additional symbols and abbreviated terms

ACM	Automatic Configuration Mode	
ADR	Address information (source or destination)	
APDU	Application Protocol Data Unit	[ISO/IEC 7498-1]
CN	Controlled Node	[IEC 61158-3-13]
CT	Consecutive Time field	
DBx	Data Octet	
DSADR	Destination SADR	
DVI	Device Vendor Information	
ID	PDU Identification	
LE	Length field	
LSB	Least Significant Octet	
MAC	Medium Access Layer	
MCM	Manual Configuration Mode	
MN	Managing Node	[IEC 61158-3-13]
MSB	Most Significant Octet	
PDO	Process Data Object	[IEC 61158-3-13]
RxSPDO	Receive Process data objects	
SADR	Safety Address	
SCM	Safety Configuration Manager	
SCT	Safety Control Time	
SD	Safety Domain	
SDG	Safety Domain Gateway	
SDN	Safety Domain Number	
SDO	Service Data Object	[IEC 61158-3-13]
SN	Safety Node	
SNMT	Safety Network Management	
SOD	Safety Object Dictionary	
SPDO	Safety Process Data Object	
SPST	Safety Parameterization Software Tool	
SSDO	Safety Service Data Object	
SSADR	Source SADR	
TADR	Additional SADR for timing information	
TR	Time Request Distinctive Number	
TReq	Time Synchronization Request	
TRes	Time Synchronization Response	
TÜV	Technischer Überwachungsverein	
TxSPDO	Safety Transmit Process data objects	

Documents
Document Sharing Hub

Full document details: BS EN 61784-3-13:2017

UDID Unique Device Identification

3.3 Conventions

3.3.1 Hexadecimal values

Some values within this part are specified in hexadecimal notation. This shall be depicted by appending a "h" to the value itself. The characters 1, 2, 3, 4, 5, 6, 8, 9, 0, a, b, c, d, e, f, A, B, C, D, E and F shall be used. All values in hexadecimal notation shall depict whole octets; therefore a hexadecimal value representation always consists of an even number of characters.

EXAMPLE 1 12ABh, 05h, 1234ABCDh

To depict data where a sequence of octets shall explicitly be defined – to be independent from the exact memory representation (Big-Endian or Little-Endian) – a hexadecimal sequence notation shall be used. Every octet is shown by a two digit hexadecimal value (without the h suffix), the single octet representations shall be separated by a dash (-).

EXAMPLE 2 00-00-00-00-00-00, AC-3E

3.3.2 Binary values

Some values within this part are specified in binary notation. This shall be depicted by appending a "b" to the value itself. The characters 1 and 0 shall be used.

EXAMPLE 11001010b

3.3.3 Wildcard digits

If parts of constant values are “don't care”, or have additional meaning outside the scope of the descriptive text, this shall be depicted by an x at the respective digit position.

EXAMPLE 12xBh, 1x0xx010b, 123x45

3.3.4 Diagrams

Graphical notations according to ISO/IEC 19501 are used throughout this part where appropriate.

4 Overview of FSCP 13/1 (openSAFETY™)

4.1 Functional Safety Communication Profile 13/1

Communication Profile Family 13 (commonly known as Ethernet POWERLINK™[5]) defines communication profiles based on IEC 61158-3-13, IEC 61158-4-13, IEC 61158-5-13, and IEC 61158-6-13.

The basic profile CP 13/1 is defined in IEC 61784-2. The CPF 13 functional safety communication profile FSCP 13/1 (openSAFETY™) is based on the CPF 13 basic profiles in IEC 61784-2 and the safety communication layer specifications defined in this part.

---

5 Ethernet POWERLINK™ and openSAFETY™ are trade names of the non-profit organization Ethernet POWERLINK™ Standardization Group (EPSG). This information is given for the convenience of users of this International Standard and does not constitute an endorsement by IEC of the trade name holder or any of its products. Compliance to this standard does not require use of the trade names Ethernet POWERLINK™ or openSAFETY™. Use of the trade names Ethernet POWERLINK™ or openSAFETY™ requires permission of Ethernet POWERLINK Standardization Group (EPSG) and compliance with conditions for their use (such as testing and validation).

AVA Documents Document Sharing Hub

Full document details: BS EN 61784-3-13:2017

4.2 Technical overview

FSCP 13/1 defines an open safety protocol for Ethernet-based communication down to the microsecond range.

The FSCP 13/1 services and protocol specify safety related data communication between Safety Nodes (SNs). The FSCP 13/1 protocol technology is designed to provide SIL 3 safety function according to IEC 61508. The network configuration is done by using the Safety Configuration Manager (SCM). Safety Network Management (SNMT) services are used for booting and runtime diagnosis of FSCP 13/1 networks. The Safety Object Dictionary (SOD) is database provided by every SN containing configuration and user data. Safety Service Data Objects (SSDO) are used for the exchange of spontaneous data. Safety Process Data Objects (SPDO) provide services for exchange of synchronous data.

Synchronous data communication between SNs is modelled according to the publisher subscriber model (see Figure 3), whereas spontaneous data communication use the client server model (see Figure 4).

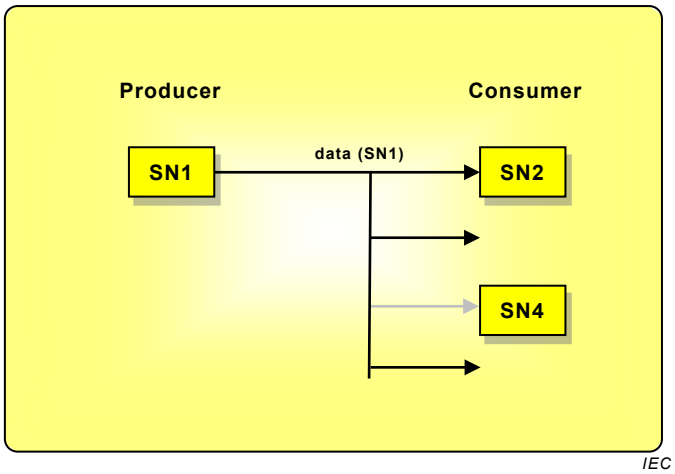

Figure 3 – Producer consumer example

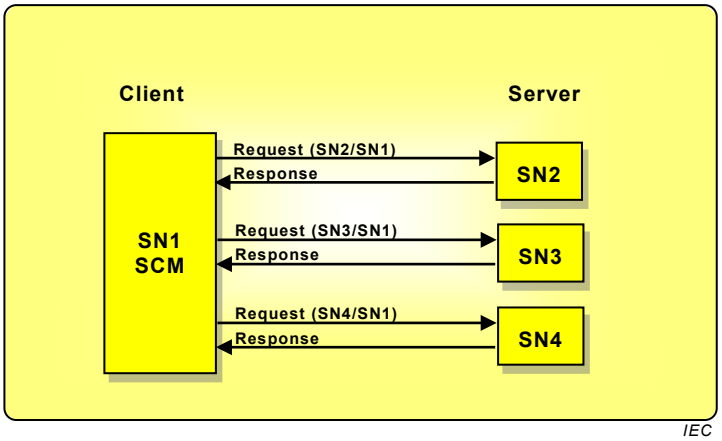

Figure 4 – Client server example

5 General

5.1 External documents providing specifications for the profile

The documents [46] and [47] may help understanding FSCP 13/1 concepts.

Documents
Document Sharing Hub
Full document details: BS EN 61784-3-13:2017

5.2 Safety functional requirements

The following requirements were used in the development of FSCP 13/1 and shall apply to the development of devices that implement the FSCP 13/1 protocol:

- FSCP 13/1 shall support Safety Integrity Level 3 (SIL 3) according to IEC 61508,
- The basic requirements for the development of FSCP 13/1 are specified in IEC 61784-3,
- FSCP 13/1 utilizes services defined in IEC 61158-5-13,
- FSCP 13/1 protocol is based on a black channel approach; there is no safety related dependency on the CPF 13 communication profile,
- Implementations of FSCP 13/1 shall comply with IEC 61508,
- CPF 13 requirements shall be unchanged for safety unless specified otherwise in this part,
- Safety communication and standard communication shall be independent. However, standard devices and FSCP 13/1 devices shall be able to use the same communication channel,
- Non safety related network infrastructure devices shall be usable to build a FSCP 13/1 network,
- Up to 1 023 safety related devices shall be supported within one safety domain,
- Up to 1 023 safety domains shall be supported,
- Bandwidth used by safety messages shall be kept as low as possible, safety PDUs shall be optimized for devices with less data (e.g. digital IO), and
- Unless specified otherwise in this part, the safe state of any value shall be zero (0).

5.3 Safety measures

FSCP 13/1 shall use the safety measures listed in Table 1 to detect communication errors for cyclic data transferred in SPDO (see 7.2). The safety measures shall be processed and monitored within each FSCP 13/1 device.

Table 1 – Communication errors and detection measures (cyclic)

Communication errors	Safety measures							
	Sequence number	Time stamp	Time expectation	Connection authentication	Feedback message	Data integrity assurance	Redundancy with cross checking	Different data integrity assurance systems
Corruption						X	X	
Unintended repetition		X						
Incorrect sequence		X						
Loss			X[a]					
Unacceptable delay		X	X					
Insertion			X[b]					
Masquerade			X			X	X	X
Addressing				X				

NOTE The errors “loss” and “insertion” will not be detected by the use of a time stamp. A loss of data is detected within the maximum reaction time by the use of a watchdog. If a message was sent more than once (insertion), the timestamp is unchanged and the receiving device ignores this message.

[a] Missing PDUs shall be detected within maximum reaction time.
[b] Only one message shall be accepted during a defined time frame.

AVA Documents Document Sharing Hub

Full document details: BS EN 61784-3-13:2017

FSCP 13/1 shall use the safety measures listed in Table 2 to detect communication errors for acyclic data transferred in SSDO (see 7.3) or SNMT (see 7.4). The safety measures shall be processed and monitored within each FSCP 13/1 device.

Table 2 – Communication errors and detection measures (acyclic)

Communication errors	Safety measures							
	Sequence number	Time stamp	Time expectation	Connection authentication	Feedback message[e]	Data integrity assurance	Redundancy with cross checking	Different data integrity assurance systems
Corruption					X	X	X	
Unintended repetition	X							
Incorrect sequence	X							
Loss	X				X			
Unacceptable delay			X					
Insertion	X				X			
Masquerade						X	X	X
Addressing				X				
NOTE The errors “loss” and “insertion” will not be detected by the use of a time stamp. A loss of data is detected within the maximum reaction time by the use of a watchdog. If a message was sent more than once (insertion), the timestamp is unchanged and the receiving device ignores this message.								

In order to avoid systematic and stochastic errors, the following guidelines shall be considered during development and implementation of FSCP 13/1 (see 7.1):

– The producer of safety data shall:
  - generate a time stamp,

    NOTE Any new SPDU contains a new time stamp.
  - generate CRCs, and
  - duplicate the safety message depending on the used Safety PDU;
– The consumer of a safety message data shall:
  - check PDU part one with CRC,
  - check PDU part two with CRC,
  - compare PDU part one and two data area bit-for-bit,
  - check the received address,
  - reset the internal watchdog (counter) if a new valid PDU has been received,
  - if a PDU has the same time stamp as the last one or an older one, the PDU shall be ignored,
  - if no valid PDU is received within a defined time (Safety Control Time, see 7.5.4.15), the device shall enter the safe state, and
  - if the watchdog (counter elapsed) has an overrun (not been reset within the maximum time), the device shall enter a safe state.

5.4 Safety communication layer structure

The FSCP 13/1 protocol is layered on top of a standard communication channel, which shall be considered a black channel. Figure 5 shows how the safety communication layer relates to the standard communication channel.

Documents
Document Sharing Hub

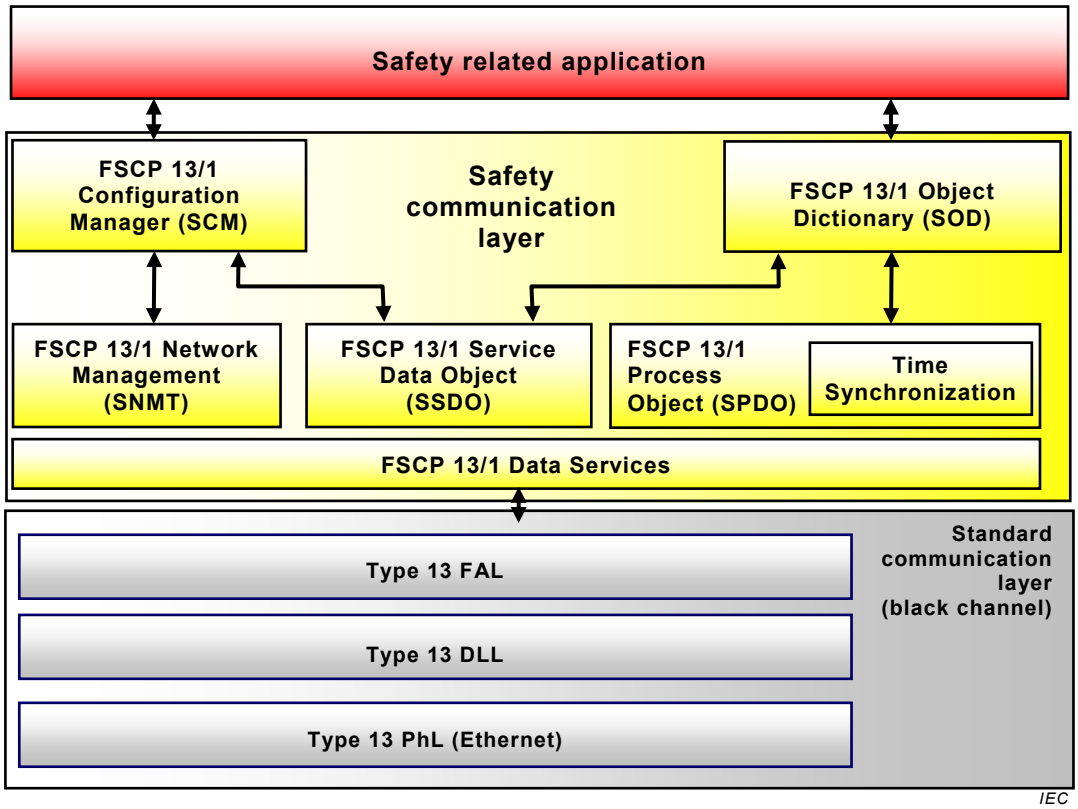

Figure 5 – Communication layer structure

Safety data is produced by the safety-related application entity. This data is encapsulated in a safety message by the safety communication layers and sent via the standard communication channel. The safety communication layer in the receiving device decodes the safety message and verifies integrity and timeliness of the data. The data is presented to the safety-related application entity. If no data is received within a defined time frame, the application entity is informed of this event, which may be used to set all outputs to the safe state.

The safety communication layer provides for:

- safe data transport (integrity and time monitoring),
- network bootup,
- run time diagnosis,
- commissioning,
- program and firmware download,
- parameterization, and
- device replacement.

All these functionalities can be accessed and controlled via the safety communication channel (see Figure 6).

Documents
Document Sharing Hub
Full document details: BS EN 61784-3-13:2017

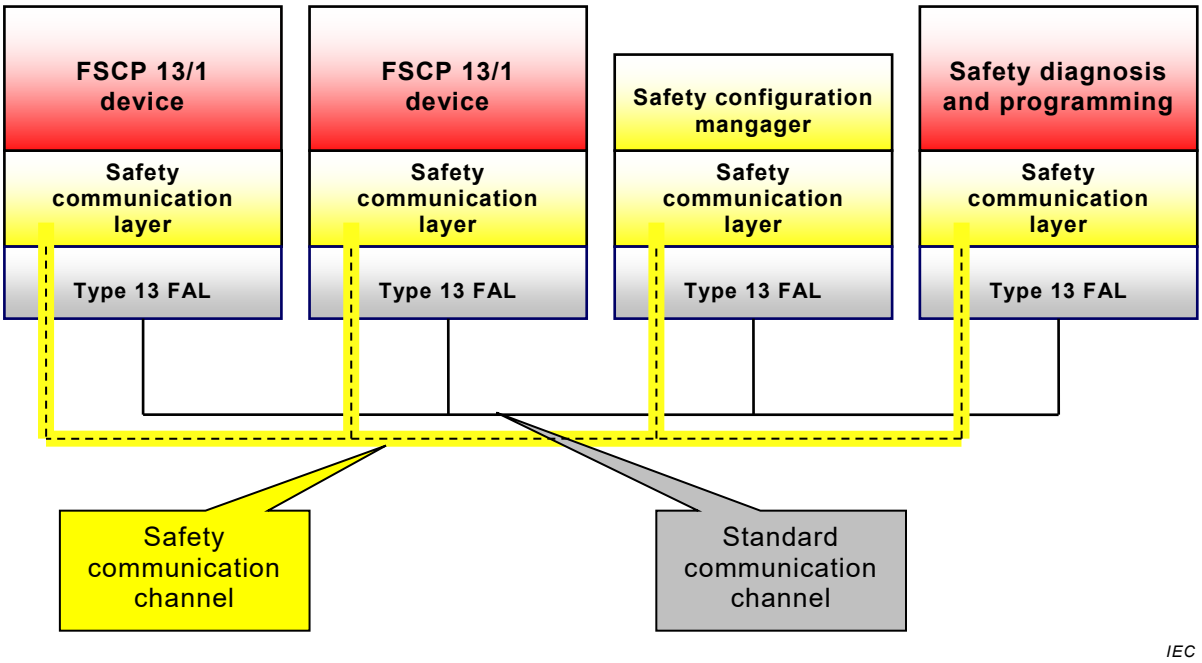

Figure 6 – Safety communication channel

5.5 Relationships with FAL (and DLL, PhL)

5.5.1 General

FSCP 13/1 shall use the services defined in IEC 61158-5-13.

5.5.2 Data types

Profiles defined in this part support all the CPF 13 data types as defined in IEC 61158-5-13.

6 Safety communication layer services

6.1 Modelling

6.1.1 Reference model

6.1.1.1 General

A FSCP 13/1 compliant implementation shall provide the following application objects:

- Safety Network Management (SNMT),
- Safety Configuration Manager (SCM),
- Safety Service Data Objects (SSDO),
- Safety Object Dictionary (SOD), and
- Safety Process Data Objects (SPDO).

How these application objects relate to each other is shown in Figure 5.

The usage of an underlying communication layer shall be mandatory.

6.1.1.2 Safety network management (SNMT)

The SNMT shall provide the required services for the Safety Configuration Manager (SCM) to configure and verify the safety related nodes within the network.

AVA Documents
Document Sharing Hub

6.1.1.3 Safety service data objects (SSDO)

The SSDO shall provide the required services to access the Safety Object Dictionary (SOD) and to support the SCM.

6.1.1.4 Safety process data objects (SPDO)

The SPDO shall provide the required services for safety related process data exchange between certain entries within the SOD of communicating nodes. The time synchronization services, which are part of SPDO, shall verify the network performance between the communicating nodes.

6.1.1.5 Safety object dictionary (SOD)

The SOD shall describe the format and access services of the device specific data.

6.1.1.6 Safety configuration manager (SCM)

The SCM shall provide the required services for start-up, parameterization and all further measures to ensure safe operation over the entire life cycle of the application.

6.1.2 Communication model

FSCP 13/1 shall use FAL services defined in IEC 61158-5-13 for data exchange between Safety Nodes (SNs), FSCP 13/1 defines a producer / consumer communication model, built using these services. FSCP 13/1 nodes shall be logically separated into producer and consumer nodes.

Producer nodes shall send data identified by a specific Safety Address (SADR). Any SN within the Safety Domain may receive this data. This is done using the mechanism as described in 7.5. As a result of this communication model, the SADR uniquely identifies an SN as well as a safety PDU sent from a specific node.

Figure 7 shows characteristic producer / consumer communication. The producer node SN1 sends data. The data is uniquely identified by the producers SADR. Each node within the Safety Domain is able to receive this data.

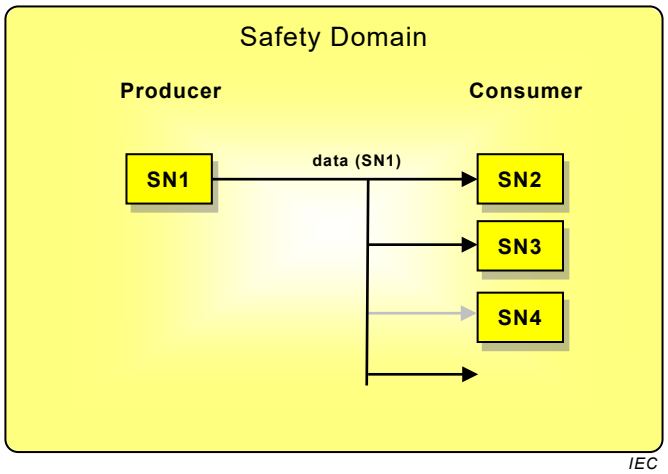

Figure 7 – Characteristic producer / consumer communication

Figure 8 demonstrates an extended version of the producer / consumer communication model which allows the producer to produce separated data for individual consumers. The producer shall use SADRs for this. The Safety Configuration Manager (SCM) shall ensure that the SADRs used are still unique within the Safety Domain.

AVA Documents
Document Sharing Hub

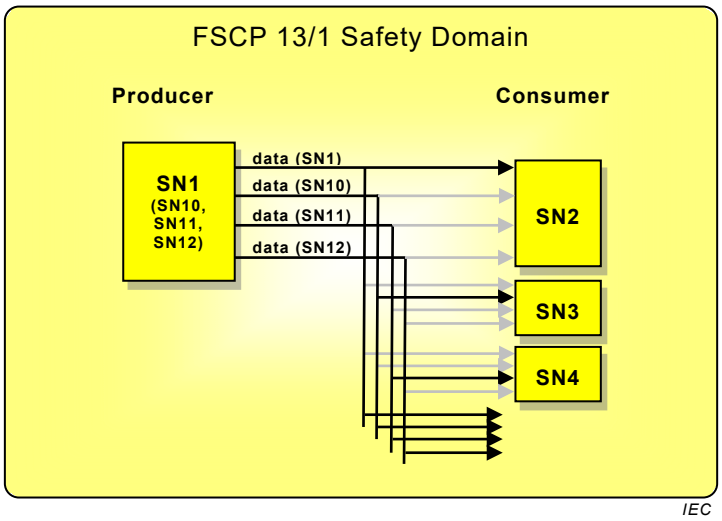

Figure 8 – Extended producer / consumer communication

Figure 9 shows the client server communication which shall be used for configuration services and network management. The SCM (or a dedicated configuration tool, see Clause 8) shall act as the client. SNs shall be limited to the server role.

Using the client server communication model, the client (SCM or Tool) sends a request to the server (SN) which is addressed within the ADR Field (see 7.1.2) using the server address and also contains the client address within the TADR Field (see 7.1.8). The server replies with a response which is addressed within the ADR Field (see 7.1.2) using the server address and also contains the client address within the TADR Field (see 7.1.8).

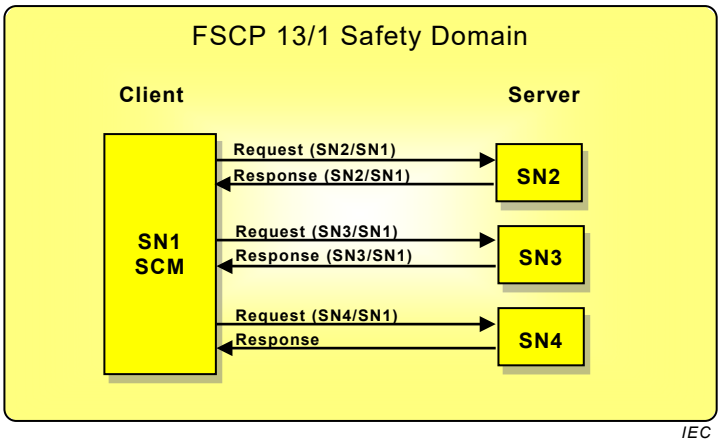

Figure 9 – Client Server communication

6.1.3 Device roles and topology

6.1.3.1 General

FSCP 13/1 device roles are defined in Table 3.

Documents
Document Sharing Hub
Full document details: BS EN 61784-3-13:2017

Table 3 – Device roles

Device role	Description
Safety Node (SN)	A FSCP 13/1 compliant device
Safety Configuration Manager(SCM)	Central service for managing a Safety Domain (SD) [a]
Safety Domain Gateway (SDG)	FSCP 13/1 device to exchange data between different SDs
[a] A Safety Domain defines an isolated address space of up to 1 023 SNs.	

An FSCP 13/1 device shall implement the device role of an SN and may implement SCM and/or an SDG.

Figure 10 gives an overview of possible interrelationships of device roles and Safety Domains. SD1 gives an example of a simple Safety Domain. Safety related communication of the FSCP 13/1 devices within SD1 is limited to the SNs within SD1.

SD2 in combination with SD3 shows the possibility to set up a FSCP 13/1 communication between different Safety Domains. This is done using a special SDG which is able to communicate with different Safety Domains. Inter-domain communication is handled by the device internally. SDG capability is independent from the SCM capability of a device. The SDG shall have one SADR in SD2 and one SADR in SD3.

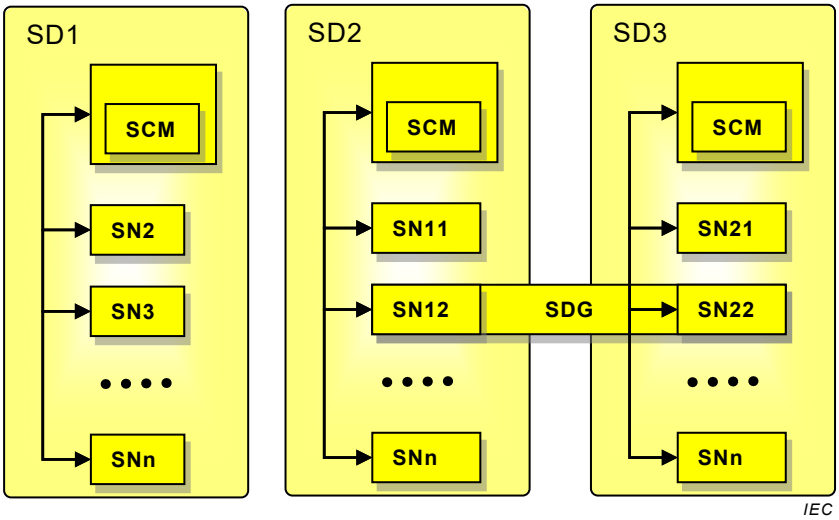

Figure 10 – Topology overview

6.1.3.2 Safety Node (SN)

An SN is a node within any network which conforms to this part. An SN shall be identified by:

- A logical address which is unique within an SD, called Safety Address (SADR). The number range for the SADR shall be 1 – 1 023 (0 is reserved and shall not be used). The SADR shall be defined at the application planning stage. Duplicate SADRs within an SD shall be detected by the SCM during network verification at start-up of the SCM or at start-up of any node within the Safety Domain.
- A physical address which is globally unique within all FSCP 13/1 compliant devices, called Unique Device Identification (UDID). Duplicate UDIDs within an SD shall be detected by the SCM.

For operation, an SN may need further data like safety related parameters or application data. It depends on the capability of the device, where this data is stored:

Documents
Document Sharing Hub
Full document details: BS EN 61784-3-13:2017

- At least the device specific firmware, the UDID and the Device Vendor Information (DVI) (see 7.5.4.8) shall be stored permanently on the device. There shall be no support within FSCP 13/1 to change this data via the network.
- Simple SNs without permanent memory shall receive SDN, SADR and all further parameters from the SCM after start-up.

  NOTE 1 The SCM will store all this SN specific data.
- Complex SNs with permanent memory or physical switches to adjust the SDN and SADR shall hold their data permanently on the device.

  NOTE 2 The SCM will store only the data which is not permanently stored on the SN; for all other data, the SCM will only verify it.

6.1.3.3 Safety Domain (SD)

6.1.3.3.1 General

A Safety Domain shall constitute an address space of up to 1 023 SADRs (1 – 1 023). Only SNs sharing the same SD shall be able to communicate directly with each other. SNs on different SDs shall be restricted to communication via a Safety Domain Gateway.

An SD is identified by the Safety Domain Number (SDN) having a number range of 1 – 1 023. 0 is reserved and shall not be used. The SDN is defined manually. When planning the application layout, unique SDNs shall be ensured.

6.1.3.3.2 Safety Domain protection

The danger of an external attack of FSCP 13/1 within the safety PDU process data (SPDO) is negligible. But there is a potential risk for the configuration services. When using the Internet in connection with FSCP 13/1, the security of the system shall be observed. Choosing an adequate encryption system is the responsibility of deployment planning and is outside the scope of this part. Proper state of the art security measures shall be applied.

Figure 11 depicts an example of FSCP 13/1 Safety Domain protection.

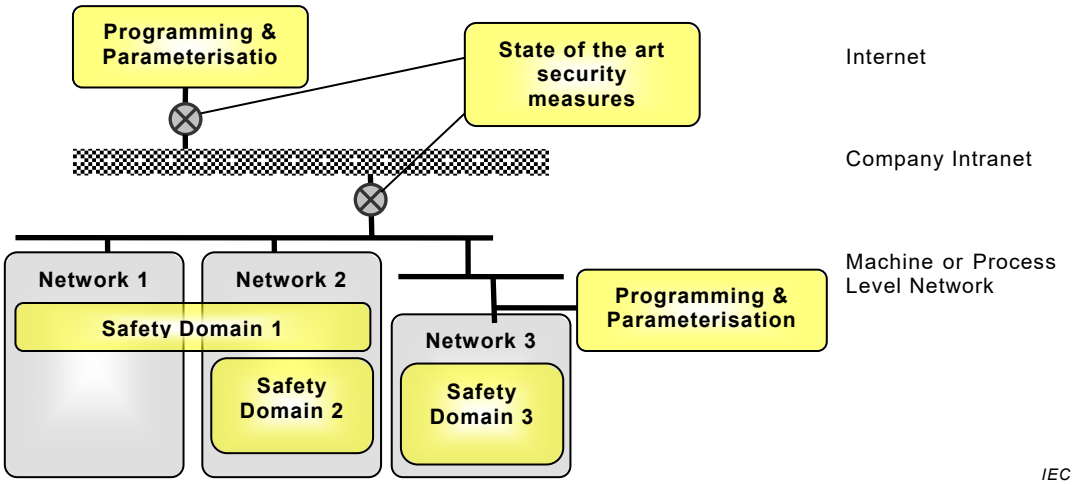

Figure 11 – Safety Domain protection (example)

6.1.3.3.3 Safety Domain separation

Interaction between Safety Domains as well as the danger of confusion during configuration and parameterization is excluded by using unique Safety Domain numbers.

Documents
Document Sharing Hub
Full document details: BS EN 61784-3-13:2017

If the size of the company intranet and the organization of the network management do not allow the administration of unique Safety Domain numbers, the network should be split into several manageable network scopes and separated by established methods like firewalls.

To avoid safety critical situations, the SPDO and SSDO PDO data shall additionally be coded to be unique within a certain Safety Domain (see 7.1.10). Therefore Safety PDOs which erroneously are transmitted in the wrong domain can be identified and rejected.

Figure 12 depicts an example of Safety Domain separation.

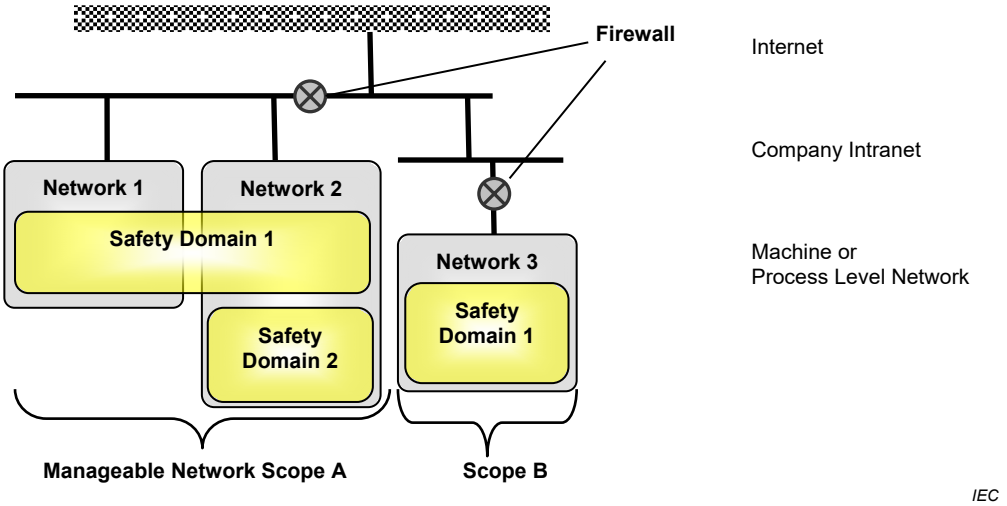

Figure 12 – Safety Domain separation (example)

6.1.3.4 Safety Domain Gateway (SDG)

This shall be a special FSCP 13/1 device role which is able to communicate with different Safety Domains (SD). Inter-domain communication is handled by the SDG internally. Within an SD, the SDG acts like a standard SN.

An SDG is responsible for:

- forward SSDO PDUs between Safety Domains, if an SN wants to send an SSDO to an SN in another Safety Domain, this SSDO is sent to the SDG which forwards the SSDO to the destination node, several SDG may have to be passed to reach the destination SN,
- forward SPDO data between Safety Domains, the SDG may provide means to read data from SPDOs in one Safety Domain and send this data into another Safety Domain inside the SPDO of the SDG.

The configuration of the SDG is vendor specific.

The scope of this part is to specify the safety related communication mechanisms which are needed for data exchange within a single Safety Domain. The communication between different Safety Domains (and the Safety Domain Gateway is a mean for this) is outside the scope of this part.

6.1.3.5 Configuration Manager (SCM)

The Safety Configuration Manager (SCM) shall be centrally responsible for managing FSCP 13/1. Within a Safety Domain, only one SN running the SCM service shall be permitted.

The SCM shall be responsible for:

Documents
Document Sharing Hub
Full document details: BS EN 61784-3-13:2017

- permanent storage of SN specific parameters which are not stored on the SN (see 6.1.3.2),
- unique assignment and verification of the SADR of the SNs within the SD,
- verification of the uniqueness of the UDID within the SD,
- verification of the expected parameters and DVI of the SNs, and
- sending a periodic life guard signal to all SNs within the SD.

NOTE With this periodic life guard signal from the SCM the SN detects certain failure situations where no SCM is responsible for the SN.

6.2 Life cycle model

6.2.1 General

FSCP 13/1 supports the safety-related application during several phases of its life cycle, as defined in IEC 61508. The safety related communication is only one part of the complete safety concept of the machinery. Of course, the other safety related parts of the machinery shall be considered as well. Subclause 6.2 focuses only on safety-related communication with FSCP 13/1.

6.2.2 Concept, planning and implementation

6.2.2.1 Application layout

When designing the application layout, the characteristics of FSCP 13/1 shall be taken into account. The following possibilities and restrictions shall be observed:

- Safety Domain, assigning SDNs,
- separation and protection of Safety Domains,
- Safety Addresses,
- Safety Configuration Manager, and
- Inter-domain communication.

6.2.2.2 Programming and parameterization

6.2.2.2.1 General

Programming and parameterization shall be carried out using safety related tools. Application files and parameters shall be stored in the SCM device only or directly in the corresponding device depending on the device capabilities.

Programming and parameterization of the safety related application shall be comprised of the following tasks:

- accessing SNs within an SD is referenced by the SADR only,

  NOTE This allows installing several identical applications with different SDNs without changing the application.
- communication to other SDs is only possible via an SDG,
- locate SCM service,
- list DVI of the devices,
- implement safety related application, and
- specify safety related parameters (see 7.5).

The SCM is the central node to configure and verify the safety related devices. FSCP 13/1 shall support two different strategies for configuration. This is necessary to satisfy all requirements coming from the wide range of applications FSCP 13/1 is ready for. These two strategies shall be:

AVA Documents
Document Sharing Hub

Full document details: BS EN 61784-3-13:2017

– Automatic Configuration Mode (ACM), and
– Manual Configuration Mode (MCM).

6.2.2.2.2 Automatic Configuration Mode (ACM)

Using the Automatic Configuration Mode (ACM), the system automatically gathers the UDID from the connected SNs. The ACM shall be used only if all of the following preconditions are fulfilled:

– all safety related devices can be connected at configuration time,
– one device (single UDID) for each SN with a specific SADR,
– if a safety related device is replaced, the SCM verifies that the new device is of the same type as the replaced one; If this is fulfilled, the new UDID will be gathered and the operator shall confirm the replacement.

6.2.2.2.3 Manual Configuration Mode (MCM)

Manual Configuration Mode (MCM) is applicable for all kinds of applications; however this mode requires manual configuration of the safety related devices. So, this mode is mainly intended for applications with the following features:

– all connectable safety related devices can not be connected at one time,

EXAMPLE 1 Robotic arm with several safety related tools.

– multiple devices (multiple UDID) for an SN with a specific SADR,

EXAMPLE 2 Consider a modular machine application with several machine lines within a plant. Machine module A (equals to the SADR) may be used for all machine lines. For bottleneck reasons, there is more than one piece of equipment (i.e. more than one UDID) for module A (=SADR), and these pieces of equipment (UDID) are all applicable on each machine line.

– module replacement shall be handled automatically without manual intervention.

6.2.3 Commissioning

6.2.3.1 General

Commissioning can be separated into three main steps:

a) installing the application (see 6.2.3.2),
b) setting up the configuration depending on the configuration mode (see 6.2.3.3),
c) verification of the safety functionality (see 6.2.3.4).

6.2.3.2 Installation

Installation of applications and parameters on the FSCP 13/1 devices shall be done using one of the following methods:

– an FSCP 13/1 compliant programming tool which uses the specified FSCP 13/1 services (see 7.3), or
– proprietary safety related transfer protocol to exchange data from the programming system to a safety related device via network or direct communication connection (e.g. serial line).

During installation phase of the life cycle, the capability of the device shall determine what data and where the data shall be downloaded:

– if the device itself holds the data, the data shall be downloaded to the device,
– if the device is not able to hold the data, the data shall be stored on the SCM. The SCM shall ensure the proper update of all devices during power up using the FSCP 13/1 configuration services.

Documents
Document Sharing Hub
Full document details: BS EN 61784-3-13:2017

Following the installation of applications and parameters, the SDN shall be updated if needed (see 6.1.3.3).

6.2.3.3 Configuration setup

6.2.3.3.1 Configuration setup using ACM

A configuration setup using ACM shall be comprised of the following four steps:

a) power up all safety related devices,

b) ensure that communication layer works for all SNs,

c) SCM starts gathering UDID (without operator interference),

d) the commissioner shall acknowledge each device.

6.2.3.3.2 Configuration setup using MCM

A configuration setup using MCM shall be comprised of the following three steps:

a) the commissioner shall enter the list of possible SADRs with the corresponding UDIDs manually, for this a safety related configuration tool shall be used,

b) the SCM shall accept all configured SADR / UDID combinations,

c) the SCM shall not accept mismatches and shall not repair mismatches as done in the ACM. This means, all mismatches shall be corrected by the commissioner by entering the corrected value using the safety related configuration tool.

6.2.3.4 Verification

Verification shall be comprised of the following five steps:

a) the commissioner shall verify the safety functionality against the safety specification for the application. In the case of device replacements or changes in the routing within the communication layer, the commissioner shall continue with step 6.2.3.3;

b) If verification is carried out during commissioning, all combinations of exchangeable modules shall be verified;

NOTE This is especially important in the case of complex modular machines (in combination with MCM).

c) If verification is carried out due to maintenance, only the safety related functionality affected by the maintenance task shall be verified;

d) When verification is finished, an installation specific backup of the current configuration should be made;

e) In case of an SCM replacement, a download of application files, parameters, and the configuration shall be done; otherwise the commissioning steps (installation, configuration and verification) shall be repeated.

6.2.4 Operation terms

6.2.4.1 Transfer of safety related data

During operation, the safety related data transfer is handled by FSCP 13/1. The underlying network is responsible for the data transport between the nodes with a defined timing quality. Loss of timing or transport quality within the underlying communication layer is detected by the FSCP 13/1 layer (see 7.7.2) and will result in loss of availability, but not in loss of safety (black channel approach).

EXAMPLE See Figure 13.

Documents
Document Sharing Hub

Full document details: BS EN 61784-3-13:2017

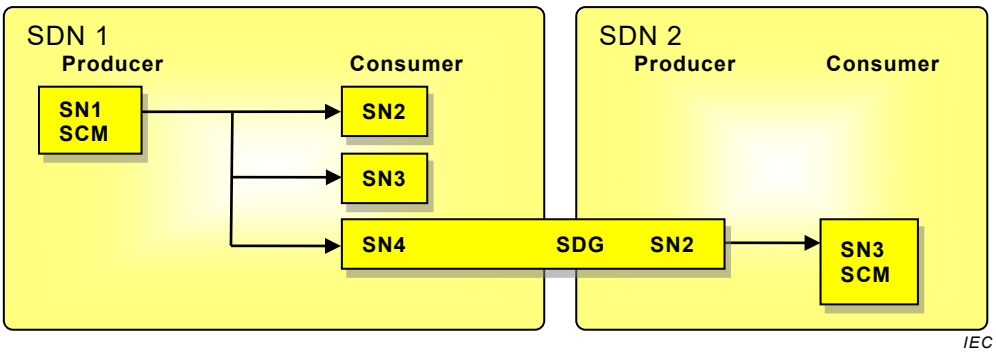

Figure 13 – Data flow example

6.2.4.2 Time synchronization and validation

In order to avoid any missed or sudden delays of data, network performance verification shall be done. From time to time each consumer shall query all connected producers for their relative time. By comparison of the relative time, the elapsed time and the time information from any transfer, the consumer shall check the timeliness of the received data.

The network performance verification is part of the data transfer. At first, a consumer sends a “Time Request” PDU to the connected producer. After receiving this PDU, the producer sends its data with an additional code, which enables the consumer to identify this message as a “Time Response”. By measuring the time delay between the “Time Request” and the “Time Response”, the consumer is able to check whether the network is fast enough to meet the requirements of the application depending on the worst case reaction time.

For a detailed description refer to 7.7.2.

6.2.4.3 Life guarding

With the service Life Guarding (see 7.5.4.5), the FSCP 13/1 shall ensure that only configured SNs are Operational in an FSCP 13/1 network. An SN expects frequent Life Guarding signals to stay in the Operational state. Otherwise it shall change to the state Pre-Operational and therefore no longer being a risk to the safety related network.

The interval of the Life Guarding signal shall be application specific, and is typically determined by the amount of time needed to verify the application safety functions.

Using organizational measurements like switching off all SNs in case of reconfiguring the SCM, may eliminate the risk in this situation. As a result, the interval for the life guarding signal may be set to a very large value (several days) for these cases.

6.2.4.4 Startup after power up or reset

After power up, the SCM (see 7.7.9) shall do the network verification. If there was no change within the network, no special tasks are required.

6.2.4.5 Recover from network failure

Following a network breakdown, all affected SNs will enter the Pre-Operational state. Since the corresponding consumer SNs will get no further data, these nodes shall enter the safe state.

After recovery of the network, all affected SNs shall send an SNMT_SN_in_PRE_OP information to the SCM. The SCM, then, shall start with the initialization of the SNs.

Documents
Document Sharing Hub
Full document details: BS EN 61784-3-13:2017

6.2.5 Maintenance terms

See 9.6.

6.3 Non safety communication layer

6.3.1 General

Subclause 6.3 lists the requirements on the non safety communication layer for transportation of safety PDUs. Communication protocols according to CPF 13 (see IEC 61784-2, IEC 61158-3-13, IEC 61158-4-13, IEC 61158-5-13 and IEC 61158-6-13) fulfil all these requirements.

6.3.2 Requirements for data transport

6.3.2.1 General

The non safety communication layer is responsible for transporting the data between the SNs. The coexistence of not safety related nodes and safety related nodes is allowed.

6.3.2.2 Masquerading

To avoid any possibilities of masquerading data as safety PDUs, non safety related nodes shall not contain code which is able to generate safety PDUs according to Clause 7.

The non safety communication layer is permitted read only access of data within a safety PDU. This shall be done by accessing the data within the safety PDUs without using the safety PDUs specific data integrity measures, such as CRC and data repetition of PDU part one in PDU part two.

6.3.2.3 Communication model

Seen from the view of CPF 13, Figure 14 depicts the common safety communication model of CNs with 0 to n SNs.

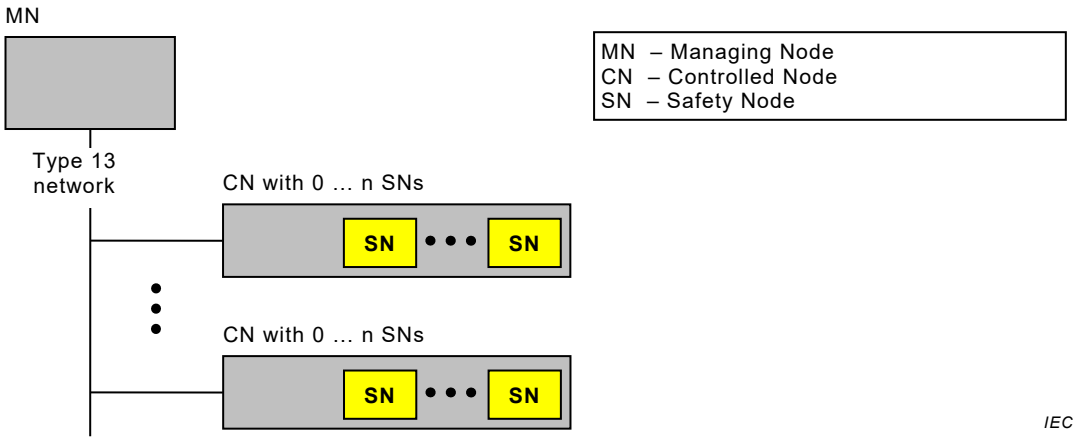

Figure 14 – Communication model

The MN and CN functionality is as defined in IEC 61158-3-13; the MN and CN are not involved in any safety function.

The safety function is implemented by an entity inside the CN which is called the Safety Node (SN). Different cases are possible:

– CN without an SN,
– CN with only one SN,

Documents
Document Sharing Hub
Full document details: BS EN 61784-3-13:2017

– CN with several safety related devices represented as a single SN. The safety of the module bus and the add-on modules itself shall be ensured by the vendor,

– CN with multiple SNs, or

– CN as a modular system and multiple SNs. The safety of the bus connecting the modules is provided by FSCP 13/1.

6.3.2.4 Transport of SPDO

The non safety communication layer shall transport the SPDO data between the SNs. The services as defined in IEC 61158-5-13 shall be used.

NOTE 1 SPDO payload is used for cyclic process data, like the state of an input or output. SPDOs are cyclically retransmitted within a certain time. Sending an SPDO is solely time triggered and not bound to a change in the data itself.

SPDO data shall be transmitted as safety PDUs inside Type 13 application layer PDUs (APDUs). Isoc2 APDUs according to IEC 61158-6-13 shall be used. An SPDO is generated cyclically by an SN, the producer, this SPDO can have one or many target SNs, the consumers. To transport an SPDO from its producer to its consumers, Type 13 mechanisms shall be used.

The basic principle of SPDO transport is shown in Figure 15.

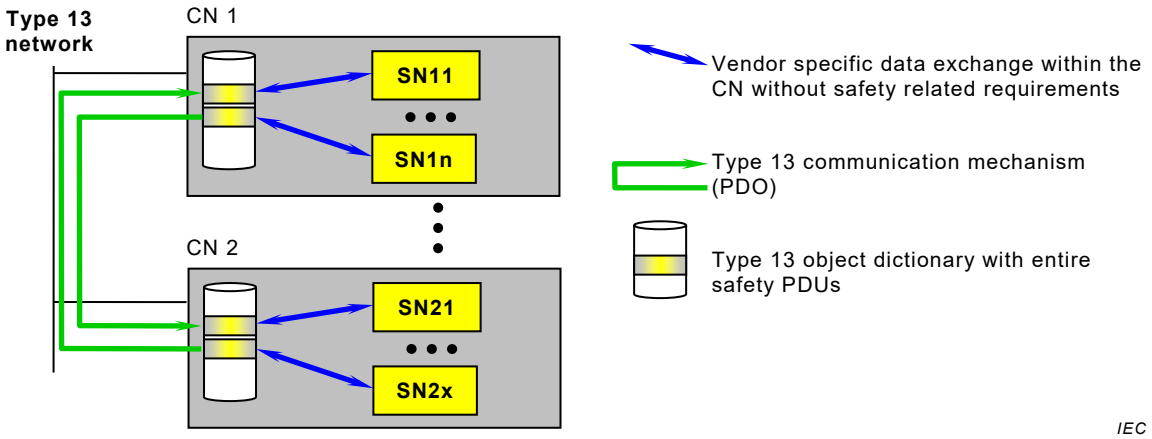

Figure 15 – SPDO transport

The transmission path between the producer SN and the consumer SN is defined as:

– the producer SN builds an SPDU,

– in the CN to which the producer SN is connected (producer CN), an object dictionary entry of data type Domain shall be defined to embody the SPDU,

– it is the responsibility of the producer CN implementation to move the SPDU data to the object dictionary entry,

– this object dictionary entry, then, shall be transmitted in a Type 13 application layer PDU (APDU), which is sent cyclically using the process data object ASE (PDO-ASE) as specified in IEC 61158-5-13,

– the object dictionary of the receiving CN (consumer CN) shall define an object of data type Domain, matching the definition of the producer's object dictionary entry; The consumer CN shall receive the APDU and copy the contained safety PDU to the Domain object mentioned before, and

– in the last step, the consumer CN implementation is responsible to move the SPDU data from the object dictionary entry to the consumer SN.

Documents
Document Sharing Hub
Full document details: BS EN 61784-3-13:2017

The mechanisms involved in transmitting the SPDO between the CN's object dictionary and the SNs (depicted by blue arrows in Figure 15) are outside the scope of this part and may be vendor specific.

NOTE 2 From the view of the Type 13 communication services and protocol it is not necessary to distinguish communication of SPDO from other data. There is no special treatment of safety data by Type 13 mechanisms. This fits with the black channel approach applied.

NOTE 3 The SNs involved in the communication do not need any knowledge about the Type 13 communication path.

6.3.2.5 Transport of SSDO

The non safety communication layer shall transport the SSDO data between the SNs. The services as defined in IEC 61158-5-13 shall be used.

The basic principle of SSDO transport is shown in Figure 16.

NOTE 1 SSDO payload is used for spontaneous data communication, like configuration or parameterization.

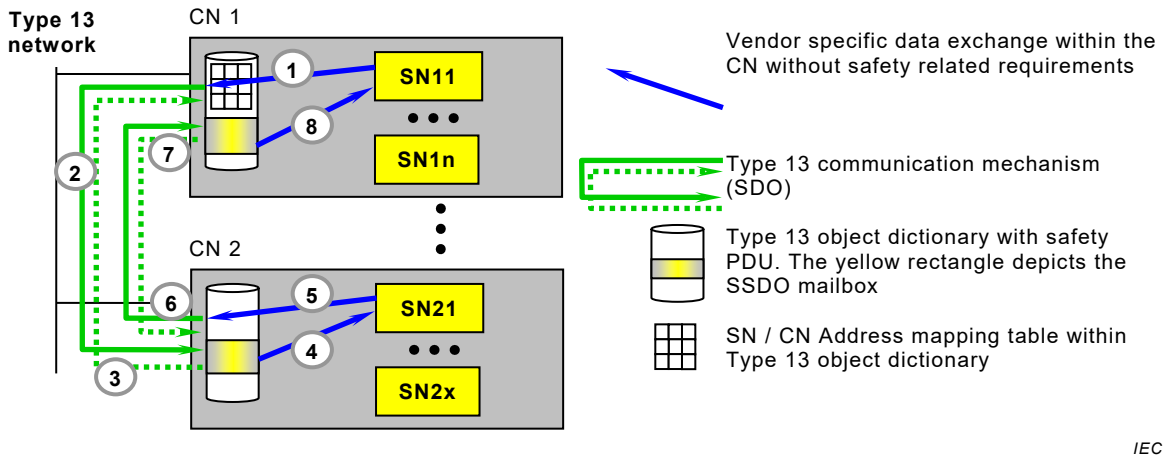

Figure 16 – SSDO transport

SSDO data shall be transmitted as safety PDUs inside Type 13 application layer PDUs (APDUs). Asyn2 APDUs with pduBody type SDO according to IEC 61158-6-13 shall be used.

An SSDO is generated spontaneously by an SN (the source SN) which is transmitted to exactly one target SN. To transport an SSDO from its source to its destination, Type 13 mechanisms shall be used.

Exchanging SSDOs between SNs is done using Type 13 services and protocols in combination with a mailbox mechanism (figures in parentheses references Figure 16):

(1) The source SN generates an SSDO request to a specific destination SN and builds a corresponding SPDU,

(2) the CN serving the source SN creates an SDO write access to the mailbox of the CN serving the destination SN, the SPDU of step (1) is written into the object dictionary of the target CN; This requires an SN to CN address mapping table within the CN serving the source SN, to get the Type 13 node ID of the CN serving the destination SN (target CN); It is the responsibility of the Type 13 system configuration to provide this address mapping table, the mailbox shall be a Type 13 object dictionary entry of data type Domain which should be defined to embody an SPDU,

(3) the SDO write access is confirmed by the SDO protocol, the connection is kept open,

(4) the destination CN redirects the data (SPDU) within the mailbox to the destination SN, for this the destination CN shall read the address information inside the SPDU;

AVA Documents Document Sharing Hub

Full document details: BS EN 61784-3-13:2017

(5) the destination SN generates an SSDO response and builds a corresponding SPDU,

(6) the destination CN creates an SDO write access to the mailbox of the source CN and writes the response SPDU into the object dictionary of the source CN,

(7) the SDO write access is confirmed, the connection is closed, and

(8) the source CN redirects the data (SPDU) within the mailbox to the destination SN, for this the source CN shall read the address information inside the SPDU.

The mechanisms involved in transmitting the SPDU between the CN's object dictionary and the SNs (depicted by blue arrows in Figure 16) are outside the scope of this part and may be vendor specific.

NOTE 2 From the view of the Type 13 communication services and protocol it is not necessary to distinguish communication of SSDO from other data. There is no special treatment of safety data by Type 13 mechanisms. This fits with the black channel approach applied.

NOTE 3 The SNs involved in the communication do not need any knowledge about the Type 13 communication path.

6.3.2.6 Representation of diagnostic data

The non safety communication layer shall support services to provide FSCP 13/1 specific diagnostic data according to Clause 7.

The basic principle of diagnostic data representation is shown in Figure 17.

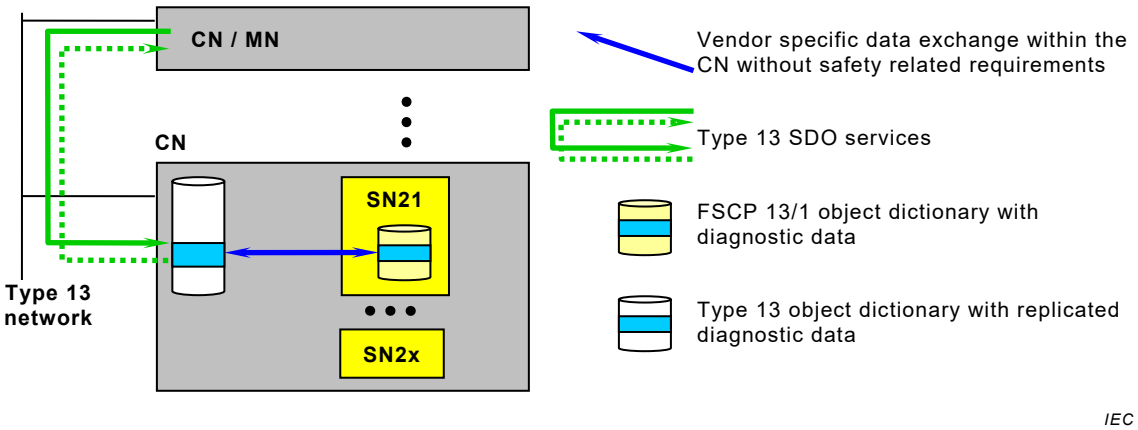

Figure 17 – Diagnostic data representation

Diagnostic data within an SN is stored in the SOD (see Clause 7).

NOTE Usually this diagnostic data is requested from distinguished nodes (e.g. central controller, human machine interface, service equipment) to process the diagnostic data and to report them to the end user.

The CN shall replicate the diagnostic data from the SOD in the Type 13 object dictionary within the CN, where they can access using Type 13 SDO services.

6.3.3 Domain protection and separation

In accordance with 6.1.3.3.2 and 6.1.3.3.3, the communication layer shall support proper security features to protect the domain against attacks from outside and to avoid interferences between separated domains.

Documents
Document Sharing Hub
Full document details: BS EN 61784-3-13:2017