BS EN 61970-301:2017

BSI Standards Publication

Energy management system application program interface (EMS-API)

Part 301: Common information model (CIM) base

Documents
Document Sharing Hub

Full document details: BS EN 61970-301:2017

National foreword

This British Standard is the UK implementation of EN 61970-301:2017. It is identical to IEC 61970-301:2016. It supersedes BS EN 61970-301:2014 which is withdrawn.

The UK participation in its preparation was entrusted to Technical Committee PEL/57, Power systems management and associated information exchange.

A list of organizations represented on this committee can be obtained on request to its secretary.

This publication does not purport to include all the necessary provisions of a contract. Users are responsible for its correct application.

© The British Standards Institution 2017.
Published by BSI Standards Limited 2017

ISBN 978 0 580 91020 3
ICS 33.200

Compliance with a British Standard cannot confer immunity from legal obligations.

This Published Document was published under the authority of the Standards Policy and Strategy Committee on 30 April 2017.

Amendments/corrigenda issued since publication

Date	Text affected

Documents
Document Sharing Hub

Full document details: BS EN 61970-301:2017

EUROPEAN STANDARD

NORME EUROPÉENNE

EUROPÄISCHE NORM

EN 61970-301

March 2017

ICS 33.200

Supersedes EN 61970-301:2014

English Version

Energy management system application program interface (EMS-API) - Part 301: Common information model (CIM) base (IEC 61970-301:2016)

Interface de programmation d'application pour système de gestion d'énergie (EMS-API) - Partie 301: Base de modèle d'information commun (CIM)
(IEC 61970-301:2016)

Schnittstelle für Anwendungsprogramme für Netzführungssysteme (EMS-API) - Teil 301: Allgemeines Informationsmodell (CIM), Basismodell
(IEC 61970-301:2016)

This European Standard was approved by CENELEC on 2017-01-20. CENELEC members are bound to comply with the CEN/CENELEC Internal Regulations which stipulate the conditions for giving this European Standard the status of a national standard without any alteration.

Up-to-date lists and bibliographical references concerning such national standards may be obtained on application to the CEN-CENELEC Management Centre or to any CENELEC member.

This European Standard exists in three official versions (English, French, German). A version in any other language made by translation under the responsibility of a CENELEC member into its own language and notified to the CEN-CENELEC Management Centre has the same status as the official versions.

CENELEC members are the national electrotechnical committees of Austria, Belgium, Bulgaria, Croatia, Cyprus, the Czech Republic, Denmark, Estonia, Finland, Former Yugoslav Republic of Macedonia, France, Germany, Greece, Hungary, Iceland, Ireland, Italy, Latvia, Lithuania, Luxembourg, Malta, the Netherlands, Norway, Poland, Portugal, Romania, Serbia, Slovakia, Slovenia, Spain, Sweden, Switzerland, Turkey and the United Kingdom.

European Committee for Electrotechnical Standardization
Comité Européen de Normalisation Electrotechnique
Europäisches Komitee für Elektrotechnische Normung

CEN-CENELEC Management Centre: Avenue Marnix 17, B-1000 Brussels

© 2017 CENELEC All rights of exploitation in any form and by any means reserved worldwide for CENELEC Members.

Ref. No. EN 61970-301:2017 E

AVA Documents Document Sharing Hub

Full document details: BS EN 61970-301:2017

EN 61970-301:2017

European foreword

The text of document 57/1779/FDIS, future edition 6 of IEC 61970-301, prepared by IEC/TC 57 "Power systems management and associated information exchange" was submitted to the IEC-CENELEC parallel vote and approved by CENELEC as EN 61970-301:2017.

The following dates are fixed:

- latest date by which the document has to be implemented at national level by publication of an identical national standard or by endorsement (dop) 2017-10-20
- latest date by which the national standards conflicting with the document have to be withdrawn (dow) 2020-01-20

This document supersedes EN 61970-301:2014.

Attention is drawn to the possibility that some of the elements of this document may be the subject of patent rights. CENELEC [and/or CEN] shall not be held responsible for identifying any or all such patent rights.

This document has been prepared under a mandate given to CENELEC by the European Commission and the European Free Trade Association.

Endorsement notice

The text of the International Standard IEC 61970-301:2016 was approved by CENELEC as a European Standard without any modification.

In the official version, for Bibliography, the following notes have to be added for the standards indicated:

IEC 61850-7-3	NOTE	Harmonized as EN 61850-7-3.
IEC 61968-11:2013	NOTE	Harmonized as EN 61968-11:2013 (not modified).
IEC 61970-501	NOTE	Harmonized as EN 61970-501.
IEC 62325 Series	NOTE	Harmonized as EN 62325 Series.

Documents
Document Sharing Hub

Full document details: BS EN 61970-301:2017

Annex ZA
(normative)

Normative references to international publications with their corresponding European publications

The following documents, in whole or in part, are normatively referenced in this document and are indispensable for its application. For dated references, only the edition cited applies. For undated references, the latest edition of the referenced document (including any amendments) applies.

NOTE 1 When an International Publication has been modified by common modifications, indicated by (mod), the relevant EN/HD applies.

NOTE 2 Up-to-date information on the latest versions of the European Standards listed in this annex is available here: www.cenelec.eu

Publication	Year	Title	EN/HD	Year
IEC 60050	Series	International electrotechnical vocabulary (IEV)	-	-
IEC 61850	Series	Communication networks and systems for power utility automation	EN 61850	Series
IEC 61850-7-4	2010	Communication networks and systems for power utility automation - Part 7-4: Basic communication structure - Compatible logical node classes and data object classes	EN 61850-7-4	2010
IEC 61968	Series	Application integration at electric utilities - System interfaces for distribution management	EN 61968	Series
IEC/TS 61970-2	-	Energy management system application program interface (EMS-API) - Part 2: Glossary	CLC/TS 61970-2	-
UML 2.0 - Object Management group	-	Object Management Group: UML 2.0 Specification	-	-

Documents
Document Sharing Hub

Full document details: BS EN 61970-301:2017

CONTENTS

FOREWORD ... 32
INTRODUCTION ... 34
1 Scope ... 36
2 Normative references ... 36
3 Terms and definitions ... 37
4 CIM specification ... 37
4.1 Overview ... 37
4.2 CIM modeling notation ... 38
4.3 CIM packages ... 38
4.4 CIM classes and relationships ... 40
4.4.1 Classes ... 40
4.4.2 Generalization ... 41
4.4.3 Simple association ... 42
4.4.4 Aggregation ... 43
4.5 CIM model concepts and examples ... 43
4.5.1 Concepts ... 43
4.5.2 Containment, equipment hierarchies and naming ... 44
4.5.3 Names model ... 45
4.5.4 Connectivity model ... 46
4.5.5 Inheritance hierarchy ... 49
4.5.6 Transformer model ... 51
4.5.7 Transformer tap modeling ... 53
4.5.8 Phase wire modeling ... 66
4.5.9 Grounding devices modeling ... 68
4.5.10 Cuts, clamps and jumpers model ... 71
4.5.11 Measurements and controls ... 75
4.5.12 Regulating control models ... 80
4.5.13 DC model for CIM ... 81
4.5.14 Static Var Compensator voltage regulation ... 100
4.6 Modeling guidelines ... 102
4.6.1 Modeling for change ... 102
4.6.2 Process for amendments to the CIM ... 102
4.6.3 Changes to the CIM UML model ... 102
4.6.4 Changes to the CIM standards documents ... 103
4.6.5 Deprecations ... 103
4.6.6 CIM profiles ... 103
4.7 Modeling tools ... 103
4.8 User implementation conventions ... 104
4.8.1 Conventions beyond UML ... 104
4.8.2 Number of terminals for ConductingEquipment objects ... 104
4.9 CIM modeling examples ... 104
5 Detailed model ... 105
5.1 Overview ... 105
5.2 Context ... 105
6 Package Base ... 107
6.1 General ... 107

AVA Documents
Document Sharing Hub
Full document details: BS EN 61970-301:2017

6.2 Package Faults ... 107
6.2.1 General ... 107
6.2.2 EquipmentFault ... 107
6.2.3 Fault ... 108
6.2.4 FaultCauseType ... 109
6.2.5 FaultImpedance compound ... 109
6.2.6 LineFault ... 109
6.2.7 PhaseConnectedFaultKind enumeration ... 110
6.3 Package DocIEC 61970 ... 111
6.4 Package Domain ... 112
6.4.1 General ... 112
6.4.2 ActivePower datatype ... 118
6.4.3 ActivePowerChangeRate datatype ... 118
6.4.4 ActivePowerPerCurrentFlow datatype ... 119
6.4.5 ActivePowerPerFrequency datatype ... 119
6.4.6 Admittance datatype ... 119
6.4.7 AngleDegrees datatype ... 120
6.4.8 AngleRadians datatype ... 120
6.4.9 ApparentPower datatype ... 120
6.4.10 Area datatype ... 120
6.4.11 Boolean primitive ... 121
6.4.12 Capacitance datatype ... 121
6.4.13 CapacitancePerLength datatype ... 121
6.4.14 Conductance datatype ... 121
6.4.15 ConductancePerLength datatype ... 121
6.4.16 CostPerEnergyUnit datatype ... 122
6.4.17 CostPerVolume datatype ... 122
6.4.18 CostRate datatype ... 122
6.4.19 Currency enumeration ... 123
6.4.20 CurrentFlow datatype ... 123
6.4.21 Damping datatype ... 123
6.4.22 Date primitive ... 124
6.4.23 DateInterval compound ... 124
6.4.24 DateTime primitive ... 124
6.4.25 DateTimeInterval compound ... 124
6.4.26 Decimal primitive ... 124
6.4.27 DecimalQuantity compound ... 124
6.4.28 Displacement datatype ... 125
6.4.29 Duration primitive ... 125
6.4.30 Float primitive ... 125
6.4.31 FloatQuantity compound ... 125
6.4.32 Frequency datatype ... 125
6.4.33 Hours datatype ... 126
6.4.34 Impedance datatype ... 126
6.4.35 Inductance datatype ... 126
6.4.36 InductancePerLength datatype ... 126
6.4.37 Integer primitive ... 127
6.4.38 IntegerQuantity compound ... 127
6.4.39 KiloActivePower datatype ... 127

AVA Documents
Document Sharing Hub

Full document details: BS EN 61970-301:2017

6.4.40 Length datatype ... 127
6.4.41 Minutes datatype ... 128
6.4.42 Money datatype ... 128
6.4.43 MonthDay primitive ... 128
6.4.44 MonthDayInterval compound ... 128
6.4.45 PU datatype ... 128
6.4.46 PerCent datatype ... 129
6.4.47 Pressure datatype ... 129
6.4.48 Reactance datatype ... 129
6.4.49 ReactancePerLength datatype ... 129
6.4.50 ReactivePower datatype ... 130
6.4.51 RealEnergy datatype ... 130
6.4.52 Resistance datatype ... 130
6.4.53 ResistancePerLength datatype ... 130
6.4.54 RotationSpeed datatype ... 131
6.4.55 Seconds datatype ... 131
6.4.56 Speed datatype ... 131
6.4.57 String primitive ... 132
6.4.58 StringQuantity compound ... 132
6.4.59 Susceptance datatype ... 132
6.4.60 SusceptancePerLength datatype ... 132
6.4.61 Temperature datatype ... 133
6.4.62 Time primitive ... 133
6.4.63 TimeInterval compound ... 133
6.4.64 UnitMultiplier enumeration ... 133
6.4.65 UnitSymbol enumeration ... 134
6.4.66 Voltage datatype ... 135
6.4.67 VoltagePerReactivePower datatype ... 135
6.4.68 Volume datatype ... 135
6.4.69 VolumeFlowRate datatype ... 136
6.4.70 WaterLevel datatype ... 136
6.4.71 Weight datatype ... 136
6.5 Package Core ... 136
6.5.1 General ... 136
6.5.2 ACDCTerminal ... 140
6.5.3 BaseFrequency ... 141
6.5.4 BasePower ... 141
6.5.5 BaseVoltage ... 142
6.5.6 BasicIntervalSchedule ... 143
6.5.7 Bay ... 143
6.5.8 BreakerConfiguration enumeration ... 144
6.5.9 BusbarConfiguration enumeration ... 144
6.5.10 ConductingEquipment ... 144
6.5.11 ConnectivityNode ... 145
6.5.12 ConnectivityNodeContainer ... 146
6.5.13 Curve ... 147
6.5.14 CurveData root class ... 147
6.5.15 CurveStyle enumeration ... 148
6.5.16 Equipment ... 148

AVA Documents
Document Sharing Hub
Full document details: BS EN 61970-301:2017

6.5.17 EquipmentContainer ... 149
6.5.18 GeographicalRegion ... 150
6.5.19 IdentifiedObject root class ... 150
6.5.20 IrregularIntervalSchedule ... 151
6.5.21 IrregularTimePoint root class ... 152
6.5.22 Name root class ... 152
6.5.23 NameType root class ... 153
6.5.24 NameTypeAuthority root class ... 153
6.5.25 OperatingParticipant ... 154
6.5.26 OperatingShare root class ... 154
6.5.27 PSRType ... 155
6.5.28 PhaseCode enumeration ... 155
6.5.29 PowerSystemResource ... 156
6.5.30 RegularIntervalSchedule ... 157
6.5.31 RegularTimePoint root class ... 158
6.5.32 ReportingSuperGroup ... 158
6.5.33 SubGeographicalRegion ... 159
6.5.34 Substation ... 159
6.5.35 Terminal ... 160
6.5.36 VoltageLevel ... 161
6.6 Package DiagramLayout ... 162
6.6.1 General ... 162
6.6.2 DiagramStyle ... 163
6.6.3 Diagram ... 164
6.6.4 DiagramObject ... 164
6.6.5 DiagramObjectGluePoint root class ... 166
6.6.6 DiagramObjectPoint root class ... 166
6.6.7 DiagramObjectStyle ... 166
6.6.8 OrientationKind enumeration ... 167
6.6.9 TextDiagramObject ... 167
6.6.10 VisibilityLayer ... 168
6.7 Package OperationalLimits ... 169
6.7.1 General ... 169
6.7.2 ActivePowerLimit ... 170
6.7.3 ApparentPowerLimit ... 171
6.7.4 BranchGroup ... 171
6.7.5 BranchGroupTerminal root class ... 172
6.7.6 CurrentLimit ... 172
6.7.7 OperationalLimit ... 173
6.7.8 OperationalLimitDirectionKind enumeration ... 174
6.7.9 OperationalLimitSet ... 174
6.7.10 OperationalLimitType ... 175
6.7.11 VoltageLimit ... 175
6.8 Package Topology ... 176
6.8.1 General ... 176
6.8.2 BusNameMarker ... 178
6.8.3 DCTopologicalNode ... 179
6.8.4 TopologicalIsland ... 179
6.8.5 TopologicalNode ... 180

AVA Documents
Document Sharing Hub

Full document details: BS EN 61970-301:2017

6.9 Package Wires ... 181
6.9.1 General ... 181
6.9.2 PerLengthSequenceImpedance ... 197
6.9.3 PerLengthPhaseImpedance ... 198
6.9.4 ShuntCompensatorPhase ... 199
6.9.5 RatioTapChanger ... 200
6.9.6 BusbarSection ... 201
6.9.7 SinglePhaseKind enumeration ... 202
6.9.8 TransformerTank ... 202
6.9.9 Disconnector ... 203
6.9.10 Jumper ... 204
6.9.11 TapSchedule ... 205
6.9.12 TransformerCoreAdmittance ... 205
6.9.13 SVCControlMode enumeration ... 206
6.9.14 EnergyConsumerPhase ... 206
6.9.15 SynchronousMachineOperatingMode enumeration ... 207
6.9.16 TapChangerControl ... 208
6.9.17 PhaseTapChangerTable ... 209
6.9.18 TransformerStarImpedance ... 209
6.9.19 Breaker ... 210
6.9.20 GroundDisconnector ... 211
6.9.21 SwitchSchedule ... 212
6.9.22 PowerTransformer ... 213
6.9.23 PhaseTapChangerAsymmetrical ... 216
6.9.24 Ground ... 217
6.9.25 Line ... 218
6.9.26 PhaseTapChangerSymmetrical ... 218
6.9.27 RegulationSchedule ... 219
6.9.28 Fuse ... 220
6.9.29 TransformerMeshImpedance ... 221
6.9.30 SwitchPhase ... 222
6.9.31 PowerTransformerEnd ... 223
6.9.32 PetersenCoil ... 225
6.9.33 RegulatingCondEq ... 226
6.9.34 PhaseTapChangerNonLinear ... 227
6.9.35 SeriesCompensator ... 228
6.9.36 PhaseShuntConnectionKind enumeration ... 229
6.9.37 GroundingImpedance ... 229
6.9.38 TransformerControlMode enumeration ... 230
6.9.39 RatioTapChangerTablePoint ... 230
6.9.40 ACLineSegment ... 231
6.9.41 Recloser ... 232
6.9.42 CompositeSwitch ... 234
6.9.43 TransformerEnd ... 234
6.9.44 Sectionaliser ... 236
6.9.45 VoltageControlZone ... 237
6.9.46 EnergySource ... 237
6.9.47 SynchronousMachine ... 239
6.9.48 RegulatingControlModeKind enumeration ... 241

AVA Documents
Document Sharing Hub
Full document details: BS EN 61970-301:2017

6.9.49 Clamp ... 242
6.9.50 TransformerTankEnd ... 243
6.9.51 PhaseTapChanger ... 244
6.9.52 ACLineSegmentPhase ... 244
6.9.53 RatioTapChangerTable ... 245
6.9.54 RotatingMachine ... 246
6.9.55 RegulatingControl ... 247
6.9.56 PhaseImpedanceData root class ... 248
6.9.57 ShuntCompensator ... 249
6.9.58 EarthFaultCompensator ... 250
6.9.59 MutualCoupling ... 251
6.9.60 Cut ... 252
6.9.61 ReactiveCapabilityCurve ... 253
6.9.62 Switch ... 254
6.9.63 StaticVarCompensator ... 256
6.9.64 CoolantType enumeration ... 257
6.9.65 ProtectedSwitch ... 257
6.9.66 EnergyConsumer ... 258
6.9.67 Junction ... 260
6.9.68 PhaseTapChangerLinear ... 261
6.9.69 Conductor ... 262
6.9.70 PerLengthImpedance ... 263
6.9.71 FrequencyConverter ... 263
6.9.72 Plant ... 264
6.9.73 PhaseTapChangerTablePoint ... 265
6.9.74 LoadBreakSwitch ... 266
6.9.75 PetersenCoilModeKind enumeration ... 267
6.9.76 SynchronousMachineKind enumeration ... 267
6.9.77 Connector ... 267
6.9.78 AsynchronousMachine ... 268
6.9.79 TapChanger ... 270
6.9.80 ShortCircuitRotorKind enumeration ... 271
6.9.81 WindingConnection enumeration ... 272
6.9.82 ExternalNetworkInjection ... 272
6.9.83 AsynchronousMachineKind enumeration ... 274
6.9.84 LinearShuntCompensator ... 274
6.9.85 NonlinearShuntCompensator ... 276
6.9.86 NonlinearShuntCompensatorPoint root class ... 277
6.9.87 LinearShuntCompensatorPhase ... 277
6.9.88 NonlinearShuntCompensatorPhase ... 278
6.9.89 NonlinearShuntCompensatorPhasePoint root class ... 279
6.9.90 PerLengthLineParameter ... 279
6.9.91 TapChangerTablePoint root class ... 280
6.9.92 PhaseTapChangerTabular ... 281
6.9.93 PowerElectronicsConnection ... 282
6.10 Package Generation ... 283
6.10.1 General ... 283
6.10.2 Package GenerationTrainingSimulation ... 284
6.10.3 Package Production ... 289

AVA Documents
Document Sharing Hub

Full document details: BS EN 61970-301:2017

6.11 Package DC ... 346
6.11.1 General ... 346
6.11.2 ACDCConverter ... 351
6.11.3 ACDCConverterDCTerminal ... 353
6.11.4 DCBaseTerminal ... 354
6.11.5 DCConverterUnit ... 355
6.11.6 DCLine ... 356
6.11.7 DCSeriesDevice ... 356
6.11.8 VsQpccControlKind enumeration ... 357
6.11.9 CsPpccControlKind enumeration ... 357
6.11.10 CsOperatingModeKind enumeration ... 358
6.11.11 CsConverter ... 358
6.11.12 DCBreaker ... 360
6.11.13 DCEquipmentContainer ... 360
6.11.14 DCBusbar ... 361
6.11.15 DCConverterOperatingModeKind enumeration ... 362
6.11.16 DCChopper ... 362
6.11.17 DCDisconnector ... 363
6.11.18 DCGround ... 364
6.11.19 DCLineSegment ... 364
6.11.20 DCShunt ... 365
6.11.21 DCConductingEquipment ... 366
6.11.22 DCSwitch ... 367
6.11.23 DCNode ... 368
6.11.24 DCTopologicalIsland ... 368
6.11.25 DCPolarityKind enumeration ... 369
6.11.26 PerLengthDCLineParameter ... 369
6.11.27 DCTerminal ... 370
6.11.28 VsPpccControlKind enumeration ... 370
6.11.29 VsCapabilityCurve ... 371
6.11.30 VsConverter ... 372
6.12 Package LoadModel ... 373
6.12.1 General ... 373
6.12.2 ConformLoad ... 375
6.12.3 ConformLoadGroup ... 376
6.12.4 ConformLoadSchedule ... 376
6.12.5 DayType ... 377
6.12.6 EnergyArea ... 378
6.12.7 LoadArea ... 378
6.12.8 LoadGroup ... 379
6.12.9 LoadResponseCharacteristic ... 379
6.12.10 NonConformLoad ... 381
6.12.11 NonConformLoadGroup ... 382
6.12.12 NonConformLoadSchedule ... 382
6.12.13 PowerCutZone ... 383
6.12.14 Season ... 384
6.12.15 SeasonDayTypeSchedule ... 384
6.12.16 StationSupply ... 385
6.12.17 SubLoadArea ... 386

AVA Documents
Document Sharing Hub
Full document details: BS EN 61970-301:2017

6.13 Package AuxiliaryEquipment ... 387
6.13.1 General ... 387
6.13.2 AuxiliaryEquipment ... 388
6.13.3 CurrentTransformer ... 389
6.13.4 FaultIndicator ... 390
6.13.5 PostLineSensor ... 391
6.13.6 PotentialTransformer ... 392
6.13.7 PotentialTransformerKind enumeration ... 393
6.13.8 Sensor ... 393
6.13.9 SurgeArrester ... 394
6.13.10 WaveTrap ... 394
6.14 Package Protection ... 395
6.14.1 General ... 395
6.14.2 CurrentRelay ... 396
6.14.3 ProtectionEquipment ... 397
6.14.4 RecloseSequence ... 398
6.14.5 SynchrocheckRelay ... 399
6.15 Package Equivalents ... 400
6.15.1 General ... 400
6.15.2 EquivalentBranch ... 401
6.15.3 EquivalentEquipment ... 404
6.15.4 EquivalentInjection ... 405
6.15.5 EquivalentNetwork ... 406
6.15.6 EquivalentShunt ... 407
6.16 Package Meas ... 408
6.16.1 General ... 408
6.16.2 Accumulator ... 412
6.16.3 AccumulatorLimit ... 412
6.16.4 AccumulatorLimitSet ... 413
6.16.5 AccumulatorReset ... 413
6.16.6 AccumulatorValue ... 414
6.16.7 Analog ... 415
6.16.8 AnalogControl ... 416
6.16.9 AnalogLimit ... 417
6.16.10 AnalogLimitSet ... 417
6.16.11 AnalogValue ... 418
6.16.12 Command ... 418
6.16.13 Control ... 419
6.16.14 Discrete ... 420
6.16.15 DiscreteCommand ... 421
6.16.16 DiscreteValue ... 421
6.16.17 Limit ... 422
6.16.18 LimitSet ... 422
6.16.19 Measurement ... 423
6.16.20 MeasurementValue ... 424
6.16.21 MeasurementValueQuality ... 425
6.16.22 MeasurementValueSource ... 426
6.16.23 Quality61850 root class ... 426
6.16.24 RaiseLowerCommand ... 427

AVA Documents
Document Sharing Hub

Full document details: BS EN 61970-301:2017

6.16.25 SetPoint ... 428
6.16.26 StringMeasurement ... 429
6.16.27 StringMeasurementValue ... 429
6.16.28 Validity enumeration ... 430
6.16.29 ValueAliasSet ... 431
6.16.30 ValueToAlias ... 431
6.17 Package SCADA ... 432
6.17.1 General ... 432
6.17.2 CommunicationLink ... 433
6.17.3 RemoteControl ... 434
6.17.4 RemotePoint ... 434
6.17.5 RemoteSource ... 435
6.17.6 RemoteUnit ... 436
6.17.7 RemoteUnitType enumeration ... 436
6.17.8 Source enumeration ... 437
6.18 Package ControlArea ... 437
6.18.1 General ... 437
6.18.2 AltGeneratingUnitMeas root class ... 440
6.18.3 AltTieMeas root class ... 440
6.18.4 ControlArea ... 440
6.18.5 ControlAreaGeneratingUnit ... 441
6.18.6 ControlAreaTypeKind enumeration ... 442
6.18.7 TieFlow root class ... 442
6.19 Package Contingency ... 443
6.19.1 General ... 443
6.19.2 Contingency ... 443
6.19.3 ContingencyElement ... 444
6.19.4 ContingencyEquipment ... 444
6.19.5 ContingencyEquipmentStatusKind enumeration ... 445
6.20 Package StateVariables ... 445
6.20.1 General ... 445
6.20.2 StateVariable root class ... 446
6.20.3 SvInjection ... 446
6.20.4 SvPowerFlow ... 447
6.20.5 SvShuntCompensatorSections ... 447
6.20.6 SvStatus ... 448
6.20.7 SvTapStep ... 448
6.20.8 SvVoltage ... 449
Annex A (informative) Custom extensions ... 450
A.1 Overview ... 450
A.2 European extensions ... 450
A.2.1 Overview ... 450
A.2.2 OperationalLimitType ... 450
A.2.3 LimitTypeKind enumeration ... 450
A.2.4 IdentifiedObject ... 451
A.2.5 EnergySchedulingType ... 452
A.2.6 ConnectivityNode ... 452
A.2.7 TopologicalNode ... 453
Bibliography ... 455

AVA Documents
Document Sharing Hub
Full document details: BS EN 61970-301:2017

Figure 1 – Example working group package dependencies 39
Figure 2 – CIM IEC 61970-301 package diagram 40
Figure 3 – Example of generalization 42
Figure 4 – Example of simple association 43
Figure 5 – Example of aggregation 43
Figure 6 – Equipment containers 45
Figure 7 – Names 46
Figure 8 – Connectivity model 47
Figure 9 – Simple network example 48
Figure 10 – Simple network connectivity modeled with CIM Topology 49
Figure 11 – Equipment inheritance hierarchy 50
Figure 12 – Transformer and Tank model 51
Figure 13 – Transformer model 53
Figure 14 – Transformer tap model 54
Figure 15 – Phasor diagram and equations 57
Figure 16 – Symmetrical phase shifter impedance variation 58
Figure 17 – Core organization 59
Figure 18 – Phasor diagram and equations 59
Figure 19 – Core organization 60
Figure 20 – Phasor diagram and equations 61
Figure 21 – Core organization 62
Figure 22 – Phasor diagram and equations 62
Figure 23 – Phasor diagrams and equations 64
Figure 24 – Core organization 65
Figure 25 – Phase wire data model 67
Figure 26 – Phase connectivity 68
Figure 27 – Station including Petersen coils drawing example 69
Figure 28 – Grounding device data model 70
Figure 29 – Instance diagram objects with one terminal coil 71
Figure 30 – Cuts, clamps, and jumpers UML model 72
Figure 31 – Example before cuts and jumpers are applied 73
Figure 32 – Example after cuts and jumpers are applied 74
Figure 33 – Example of jumper without cut or clamp 75
Figure 34 – Navigating from PSR to MeasurementValue 77
Figure 35 – Measurement placement 80
Figure 36 – Regulating control models 81
Figure 37 – HVDC bipolar link from IEC 60633 82
Figure 38 – A point-to-point VSC transmission scheme 83
Figure 39 – HVDC power flow model 83
Figure 40 – Current Source Converter power flow 84
Figure 41 – Voltage Source Converter power flow 85
Figure 42 – Power flow cases 86

AVA Documents
Document Sharing Hub
Full document details: BS EN 61970-301:2017

Figure 43 – VSC transmission with a symmetrical monopole illustrated with capacitive earthing on the DC side (IEC 62747) 87
Figure 44 – VSC *P-Q* capability curve 87
Figure 45 – Bipolar VSC transmission with earth return (IEC 62747) 88
Figure 46 – Object instances for a bipolar current source HVDC line 89
Figure 47 – Object instances for symmetric monopole VSC HVDC data model 90
Figure 48 – Containment structure for a bipolar HVDC line 91
Figure 49 – Containment structure for a bipolar back-to-back HVDC station 92
Figure 50 – The Basic topology in package Core 93
Figure 51 – DC and AC topology 94
Figure 52 – HVDC Containment 95
Figure 53 – Equipment model 96
Figure 54 – HVDC line model 97
Figure 55 – Key for Figure 56, Figure 57 and Figure 58 98
Figure 56 – Simple monopole with measurements 98
Figure 57 – Simple bipolar 99
Figure 58 – Monopole one side with detailed model 99
Figure 59 – *V-I* characteristic of SVC 100
Figure 60 – CIM top level packages 105
Figure 61 – Class diagram Faults::Faults 107
Figure 62 – Class diagram DocIEC 61970::DocumentationExampleInheritance 111
Figure 63 – Class diagram DocIEC 61970::DocumentationExampleAggregation 112
Figure 64 – Class diagram DocIEC 61970::DocumentationExampleAssociation 112
Figure 65 – Class diagram Domain::CombinedElectricalDatatypes 113
Figure 66 – Class diagram Domain::BasicDatatypes 113
Figure 67 – Class diagram Domain::ElectricityDatatypes 114
Figure 68 – Class diagram Domain::EnumeratedUnitDatatypes 115
Figure 69 – Class diagram Domain::GeneralDatatypes 116
Figure 70 – Class diagram Domain::MonetaryDatatypes 117
Figure 71 – Class diagram Domain::TimeDatatypes 118
Figure 72 – Class diagram Core::Main 137
Figure 73 – Class diagram Core::Names 138
Figure 74 – Class diagram Core::CurveSchedule 138
Figure 75 – Class diagram Core::Datatypes 139
Figure 76 – Class diagram Core::Reporting 139
Figure 77 – Class diagram Core::OperatingShare 140
Figure 78 – Class diagram DiagramLayout::DiagramLayout 163
Figure 79 – Class diagram OperationalLimits::OperationalLimits 169
Figure 80 – Class diagram OperationalLimits::BranchGroup 170
Figure 81 – Class diagram Topology::Main 177
Figure 82 – Class diagram Topology::TopologyReporting 178
Figure 83 – Class diagram Wires::CutsAndJumpers 182
Figure 84 – Class diagram Wires::Datatypes 183

AVA Documents
Document Sharing Hub

Full document details: BS EN 61970-301:2017

Figure 85 – Class diagram Wires::EarthFaultCompensator 184
Figure 86 – Class diagram Wires::InheritanceHierarchy 185
Figure 87 – Class diagram Wires::LineModel 186
Figure 88 – Class diagram Wires::MutualCoupling 187
Figure 89 – Class diagram Wires::NamingHierarchyPart1 188
Figure 90 – Class diagram Wires::NamingHierarchyPart2 189
Figure 91 – Class diagram Wires::RegulatingEquipment 190
Figure 92 – Class diagram Wires::Schedules 191
Figure 93 – Class diagram Wires::ShuntCompensator 192
Figure 94 – Class diagram Wires::SwitchingEquipment 193
Figure 95 – Class diagram Wires::TapChanger 194
Figure 96 – Class diagram Wires::VoltageControl 195
Figure 97 – Class diagram Wires::WiresPhaseModel 196
Figure 98 – Class diagram Wires::Transformer 197
Figure 99 – Class diagram Generation::Main 283
Figure 100 – Class diagram GenerationTrainingSimulation::Main 284
Figure 101 – Class diagram GenerationTrainingSimulation::Datatypes 284
Figure 102 – Class diagram Production::PowerElectronics 300
Figure 103 – Class diagram Production::Nuclear 300
Figure 104 – Class diagram Production::Main 301
Figure 105 – Class diagram Production::Datatypes 302
Figure 106 – Class diagram Production::Hydro 303
Figure 107 – Class diagram Production::Thermal 304
Figure 108 – Class diagram DC::DCContainment 347
Figure 109 – Class diagram DC::DCEquipment 348
Figure 110 – Class diagram DC::DCLineModel 349
Figure 111 – Class diagram DC::ACDCConverter 350
Figure 112 – Class diagram DC::ACDCConnectivityModel 351
Figure 113 – Class diagram LoadModel::Main 374
Figure 114 – Class diagram LoadModel::Datatypes 374
Figure 115 – Class diagram AuxiliaryEquipment::AuxiliaryEquipment 388
Figure 116 – Class diagram Protection::Main 396
Figure 117 – Class diagram Equivalents::Main 401
Figure 118 – Class diagram Meas::Control 409
Figure 119 – Class diagram Meas::Datatypes 409
Figure 120 – Class diagram Meas::Measurement 410
Figure 121 – Class diagram Meas::MeasurementInheritance 411
Figure 122 – Class diagram Meas::Quality 411
Figure 123 – Class diagram SCADA::Datatypes 432
Figure 124 – Class diagram SCADA::Main 433
Figure 125 – Class diagram ControlArea::ControlArea 438
Figure 126 – Class diagram ControlArea::ControlAreaInheritance 439
Figure 127 – Class diagram ControlArea::Datatypes 439

AVA Documents
Document Sharing Hub
Full document details: BS EN 61970-301:2017

Figure 128 – Class diagram Contingency::Contingency 443
Figure 129 – Class diagram StateVariables::StateVariables 446

Table 1 – NameType class naming conventions 46
Table 2 – Mapping of phase shift transformers to CIM classes 55
Table 3 – Mapping of symbols used in formulas to CIM attributes 56
Table 4 – Impedance variations in a phase shift transformer 56
Table 5 – Description of variables 57
Table 6 – Tap changer control options 66
Table 7 – measurementType naming conventions 78
Table 8 – MeasurementValueSource naming conventions 79
Table 9 – Attributes of Package1::Class1 106
Table 10 – Association ends of Package1::Class1 with other classes 106
Table 11 – Literals of Package1::Enumeration1 107
Table 12 – Attributes of Faults::EquipmentFault 108
Table 13 – Association ends of Faults::EquipmentFault with other classes 108
Table 14 – Attributes of Faults::Fault 108
Table 15 – Association ends of Faults::Fault with other classes 109
Table 16 – Attributes of Faults::FaultCauseType 109
Table 17 – Association ends of Faults::FaultCauseType with other classes 109
Table 18 – Attributes of Faults::FaultImpedance 109
Table 19 – Attributes of Faults::LineFault 110
Table 20 – Association ends of Faults::LineFault with other classes 110
Table 21 – Literals of Faults::PhaseConnectedFaultKind 110
Table 22 – Attributes of Domain::ActivePower 118
Table 23 – Attributes of Domain::ActivePowerChangeRate 119
Table 24 – Attributes of Domain::ActivePowerPerCurrentFlow 119
Table 25 – Attributes of Domain::ActivePowerPerFrequency 119
Table 26 – Attributes of Domain::Admittance 119
Table 27 – Attributes of Domain::AngleDegrees 120
Table 28 – Attributes of Domain::AngleRadians 120
Table 29 – Attributes of Domain::ApparentPower 120
Table 30 – Attributes of Domain::Area 120
Table 31 – Attributes of Domain::Capacitance 121
Table 32 – Attributes of Domain::CapacitancePerLength 121
Table 33 – Attributes of Domain::Conductance 121
Table 34 – Attributes of Domain::ConductancePerLength 122
Table 35 – Attributes of Domain::CostPerEnergyUnit 122
Table 36 – Attributes of Domain::CostPerVolume 122
Table 37 – Attributes of Domain::CostRate 123
Table 38 – Literals of Domain::Currency 123
Table 39 – Attributes of Domain::CurrentFlow 123
Table 40 – Attributes of Domain::Damping 124

AVA Documents
Document Sharing Hub
Full document details: BS EN 61970-301:2017

Table 41 – Attributes of Domain::DateInterval 124
Table 42 – Attributes of Domain::DateTimeInterval 124
Table 43 – Attributes of Domain::DecimalQuantity 125
Table 44 – Attributes of Domain::Displacement 125
Table 45 – Attributes of Domain::FloatQuantity 125
Table 46 – Attributes of Domain::Frequency 126
Table 47 – Attributes of Domain::Hours 126
Table 48 – Attributes of Domain::Impedance 126
Table 49 – Attributes of Domain::Inductance 126
Table 50 – Attributes of Domain::InductancePerLength 127
Table 51 – Attributes of Domain::IntegerQuantity 127
Table 52 – Attributes of Domain::KiloActivePower 127
Table 53 – Attributes of Domain::Length 127
Table 54 – Attributes of Domain::Minutes 128
Table 55 – Attributes of Domain::Money 128
Table 56 – Attributes of Domain::MonthDayInterval 128
Table 57 – Attributes of Domain::PU 129
Table 58 – Attributes of Domain::PerCent 129
Table 59 – Attributes of Domain::Pressure 129
Table 60 – Attributes of Domain::Reactance 129
Table 61 – Attributes of Domain::ReactancePerLength 130
Table 62 – Attributes of Domain::ReactivePower 130
Table 63 – Attributes of Domain::RealEnergy 130
Table 64 – Attributes of Domain::Resistance 130
Table 65 – Attributes of Domain::ResistancePerLength 131
Table 66 – Attributes of Domain::RotationSpeed 131
Table 67 – Attributes of Domain::Seconds 131
Table 68 – Attributes of Domain::Speed 132
Table 69 – Attributes of Domain::StringQuantity 132
Table 70 – Attributes of Domain::Susceptance 132
Table 71 – Attributes of Domain::SusceptancePerLength 133
Table 72 – Attributes of Domain::Temperature 133
Table 73 – Attributes of Domain::TimeInterval 133
Table 74 – Literals of Domain::UnitMultiplier 134
Table 75 – Literals of Domain::UnitSymbol 134
Table 76 – Attributes of Domain::Voltage 135
Table 77 – Attributes of Domain::VoltagePerReactivePower 135
Table 78 – Attributes of Domain::Volume 135
Table 79 – Attributes of Domain::VolumeFlowRate 136
Table 80 – Attributes of Domain::WaterLevel 136
Table 81 – Attributes of Domain::Weight 136
Table 82 – Attributes of Core::ACDCTerminal 140
Table 83 – Association ends of Core::ACDCTerminal with other classes 141

AVA Documents
Document Sharing Hub
Full document details: BS EN 61970-301:2017

Table 84 – Attributes of Core::BaseFrequency 141
Table 85 – Association ends of Core::BaseFrequency with other classes 141
Table 86 – Attributes of Core::BasePower 142
Table 87 – Association ends of Core::BasePower with other classes 142
Table 88 – Attributes of Core::BaseVoltage 142
Table 89 – Association ends of Core::BaseVoltage with other classes 142
Table 90 – Attributes of Core::BasicIntervalSchedule 143
Table 91 – Association ends of Core::BasicIntervalSchedule with other classes 143
Table 92 – Attributes of Core::Bay 143
Table 93 – Association ends of Core::Bay with other classes 144
Table 94 – Literals of Core::BreakerConfiguration 144
Table 95 – Literals of Core::BusbarConfiguration 144
Table 96 – Attributes of Core::ConductingEquipment 145
Table 97 – Association ends of Core::ConductingEquipment with other classes 145
Table 98 – Attributes of Core::ConnectivityNode 146
Table 99 – Association ends of Core::ConnectivityNode with other classes 146
Table 100 – Attributes of Core::ConnectivityNodeContainer 146
Table 101 – Association ends of Core::ConnectivityNodeContainer with other classes 146
Table 102 – Attributes of Core::Curve 147
Table 103 – Association ends of Core::Curve with other classes 147
Table 104 – Attributes of Core::CurveData 148
Table 105 – Association ends of Core::CurveData with other classes 148
Table 106 – Literals of Core::CurveStyle 148
Table 107 – Attributes of Core::Equipment 149
Table 108 – Association ends of Core::Equipment with other classes 149
Table 109 – Attributes of Core::EquipmentContainer 149
Table 110 – Association ends of Core::EquipmentContainer with other classes 150
Table 111 – Attributes of Core::GeographicalRegion 150
Table 112 – Association ends of Core::GeographicalRegion with other classes 150
Table 113 – Attributes of Core::IdentifiedObject 151
Table 114 – Association ends of Core::IdentifiedObject with other classes 151
Table 115 – Attributes of Core::IrregularIntervalSchedule 151
Table 116 – Association ends of Core::IrregularIntervalSchedule with other classes 152
Table 117 – Attributes of Core::IrregularTimePoint 152
Table 118 – Association ends of Core::IrregularTimePoint with other classes 152
Table 119 – Attributes of Core::Name 152
Table 120 – Association ends of Core::Name with other classes 153
Table 121 – Attributes of Core::NameType 153
Table 122 – Association ends of Core::NameType with other classes 153
Table 123 – Attributes of Core::NameTypeAuthority 153
Table 124 – Association ends of Core::NameTypeAuthority with other classes 154
Table 125 – Attributes of Core::OperatingParticipant 154
Table 126 – Association ends of Core::OperatingParticipant with other classes 154

AVA Documents
Document Sharing Hub
Full document details: BS EN 61970-301:2017

Table 127 – Attributes of Core::OperatingShare 154
Table 128 – Association ends of Core::OperatingShare with other classes 155
Table 129 – Attributes of Core::PSRType 155
Table 130 – Association ends of Core::PSRType with other classes 155
Table 131 – Literals of Core::PhaseCode 156
Table 132 – Attributes of Core::PowerSystemResource 156
Table 133 – Association ends of Core::PowerSystemResource with other classes 157
Table 134 – Attributes of Core::RegularIntervalSchedule 157
Table 135 – Association ends of Core::RegularIntervalSchedule with other classes 157
Table 136 – Attributes of Core::RegularTimePoint 158
Table 137 – Association ends of Core::RegularTimePoint with other classes 158
Table 138 – Attributes of Core::ReportingSuperGroup 158
Table 139 – Association ends of Core::ReportingSuperGroup with other classes 158
Table 140 – Attributes of Core::SubGeographicalRegion 159
Table 141 – Association ends of Core::SubGeographicalRegion with other classes 159
Table 142 – Attributes of Core::Substation 159
Table 143 – Association ends of Core::Substation with other classes 160
Table 144 – Attributes of Core::Terminal 160
Table 145 – Association ends of Core::Terminal with other classes 161
Table 146 – Attributes of Core::VoltageLevel 162
Table 147 – Association ends of Core::VoltageLevel with other classes 162
Table 148 – Attributes of DiagramLayout::DiagramStyle 163
Table 149 – Association ends of DiagramLayout::DiagramStyle with other classes 164
Table 150 – Attributes of DiagramLayout::Diagram 164
Table 151 – Association ends of DiagramLayout::Diagram with other classes 164
Table 152 – Attributes of DiagramLayout::DiagramObject 165
Table 153 – Association ends of DiagramLayout::DiagramObject with other classes 165
Table 154 – Association ends of DiagramLayout::DiagramObjectGluePoint with other classes 166
Table 155 – Attributes of DiagramLayout::DiagramObjectPoint 166
Table 156 – Association ends of DiagramLayout::DiagramObjectPoint with other classes 166
Table 157 – Attributes of DiagramLayout::DiagramObjectStyle 167
Table 158 – Association ends of DiagramLayout::DiagramObjectStyle with other classes 167
Table 159 – Literals of DiagramLayout::OrientationKind 167
Table 160 – Attributes of DiagramLayout::TextDiagramObject 167
Table 161 – Association ends of DiagramLayout::TextDiagramObject with other classes 168
Table 162 – Attributes of DiagramLayout::VisibilityLayer 168
Table 163 – Association ends of DiagramLayout::VisibilityLayer with other classes 169
Table 164 – Attributes of OperationalLimits::ActivePowerLimit 170
Table 165 – Association ends of OperationalLimits::ActivePowerLimit with other classes 171
Table 166 – Attributes of OperationalLimits::ApparentPowerLimit 171

AVA Documents
Document Sharing Hub

Full document details: BS EN 61970-301:2017

Table 167 – Association ends of OperationalLimits::ApparentPowerLimit with other classes ... 171
Table 168 – Attributes of OperationalLimits::BranchGroup ... 171
Table 169 – Association ends of OperationalLimits::BranchGroup with other classes ... 172
Table 170 – Attributes of OperationalLimits::BranchGroupTerminal ... 172
Table 171 – Association ends of OperationalLimits::BranchGroupTerminal with other classes ... 172
Table 172 – Attributes of OperationalLimits::CurrentLimit ... 173
Table 173 – Association ends of OperationalLimits::CurrentLimit with other classes ... 173
Table 174 – Attributes of OperationalLimits::OperationalLimit ... 173
Table 175 – Association ends of OperationalLimits::OperationalLimit with other classes ... 174
Table 176 – Literals of OperationalLimits::OperationalLimitDirectionKind ... 174
Table 177 – Attributes of OperationalLimits::OperationalLimitSet ... 174
Table 178 – Association ends of OperationalLimits::OperationalLimitSet with other classes ... 175
Table 179 – Attributes of OperationalLimits::OperationalLimitType ... 175
Table 180 – Association ends of OperationalLimits::OperationalLimitType with other classes ... 175
Table 181 – Attributes of OperationalLimits::VoltageLimit ... 176
Table 182 – Association ends of OperationalLimits::VoltageLimit with other classes ... 176
Table 183 – Attributes of Topology::BusNameMarker ... 178
Table 184 – Association ends of Topology::BusNameMarker with other classes ... 179
Table 185 – Attributes of Topology::DCTopologicalNode ... 179
Table 186 – Association ends of Topology::DCTopologicalNode with other classes ... 179
Table 187 – Attributes of Topology::TopologicalIsland ... 180
Table 188 – Association ends of Topology::TopologicalIsland with other classes ... 180
Table 189 – Attributes of Topology::TopologicalNode ... 180
Table 190 – Association ends of Topology::TopologicalNode with other classes ... 181
Table 191 – Attributes of Wires::PerLengthSequenceImpedance ... 198
Table 192 – Association ends of Wires::PerLengthSequenceImpedance with other classes ... 198
Table 193 – Attributes of Wires::PerLengthPhaseImpedance ... 198
Table 194 – Association ends of Wires::PerLengthPhaseImpedance with other classes ... 199
Table 195 – Attributes of Wires::ShuntCompensatorPhase ... 199
Table 196 – Association ends of Wires::ShuntCompensatorPhase with other classes ... 199
Table 197 – Attributes of Wires::RatioTapChanger ... 200
Table 198 – Association ends of Wires::RatioTapChanger with other classes ... 200
Table 199 – Attributes of Wires::BusbarSection ... 201
Table 200 – Association ends of Wires::BusbarSection with other classes ... 201
Table 201 – Literals of Wires::SinglePhaseKind ... 202
Table 202 – Attributes of Wires::TransformerTank ... 202
Table 203 – Association ends of Wires::TransformerTank with other classes ... 202
Table 204 – Attributes of Wires::Disconnector ... 203
Table 205 – Association ends of Wires::Disconnector with other classes ... 203
Table 206 – Attributes of Wires::Jumper ... 204

AVA Documents
Document Sharing Hub
Full document details: BS EN 61970-301:2017

Table 207 – Association ends of Wires::Jumper with other classes 204
Table 208 – Attributes of Wires::TapSchedule 205
Table 209 – Association ends of Wires::TapSchedule with other classes 205
Table 210 – Attributes of Wires::TransformerCoreAdmittance 206
Table 211 – Association ends of Wires::TransformerCoreAdmittance with other classes 206
Table 212 – Literals of Wires::SVCControlMode 206
Table 213 – Attributes of Wires::EnergyConsumerPhase 207
Table 214 – Association ends of Wires::EnergyConsumerPhase with other classes 207
Table 215 – Literals of Wires::SynchronousMachineOperatingMode 208
Table 216 – Attributes of Wires::TapChangerControl 208
Table 217 – Association ends of Wires::TapChangerControl with other classes 209
Table 218 – Attributes of Wires::PhaseTapChangerTable 209
Table 219 – Association ends of Wires::PhaseTapChangerTable with other classes 209
Table 220 – Attributes of Wires::TransformerStarImpedance 210
Table 221 – Association ends of Wires::TransformerStarImpedance with other classes 210
Table 222 – Attributes of Wires::Breaker 210
Table 223 – Association ends of Wires::Breaker with other classes 211
Table 224 – Attributes of Wires::GroundDisconnector 211
Table 225 – Association ends of Wires::GroundDisconnector with other classes 212
Table 226 – Attributes of Wires::SwitchSchedule 212
Table 227 – Association ends of Wires::SwitchSchedule with other classes 213
Table 228 – Attributes of Wires::PowerTransformer 214
Table 229 – Association ends of Wires::PowerTransformer with other classes 215
Table 230 – Attributes of Wires::PhaseTapChangerAsymmetrical 216
Table 231 – Association ends of Wires::PhaseTapChangerAsymmetrical with other classes 217
Table 232 – Attributes of Wires::Ground 217
Table 233 – Association ends of Wires::Ground with other classes 217
Table 234 – Attributes of Wires::Line 218
Table 235 – Association ends of Wires::Line with other classes 218
Table 236 – Attributes of Wires::PhaseTapChangerSymmetrical 219
Table 237 – Association ends of Wires::PhaseTapChangerSymmetrical with other classes 219
Table 238 – Attributes of Wires::RegulationSchedule 220
Table 239 – Association ends of Wires::RegulationSchedule with other classes 220
Table 240 – Attributes of Wires::Fuse 220
Table 241 – Association ends of Wires::Fuse with other classes 221
Table 242 – Attributes of Wires::TransformerMeshImpedance 222
Table 243 – Association ends of Wires::TransformerMeshImpedance with other classes 222
Table 244 – Attributes of Wires::SwitchPhase 222
Table 245 – Association ends of Wires::SwitchPhase with other classes 223
Table 246 – Attributes of Wires::PowerTransformerEnd 224
Table 247 – Association ends of Wires::PowerTransformerEnd with other classes 225
Table 248 – Attributes of Wires::PetersenCoil 225

AVA Documents
Document Sharing Hub

Full document details: BS EN 61970-301:2017

Table 249 – Association ends of Wires::PetersenCoil with other classes 226
Table 250 – Attributes of Wires::RegulatingCondEq 226
Table 251 – Association ends of Wires::RegulatingCondEq with other classes 227
Table 252 – Attributes of Wires::PhaseTapChangerNonLinear 227
Table 253 – Association ends of Wires::PhaseTapChangerNonLinear with other classes 228
Table 254 – Attributes of Wires::SeriesCompensator 228
Table 255 – Association ends of Wires::SeriesCompensator with other classes 229
Table 256 – Literals of Wires::PhaseShuntConnectionKind 229
Table 257 – Attributes of Wires::GroundingImpedance 230
Table 258 – Association ends of Wires::GroundingImpedance with other classes 230
Table 259 – Literals of Wires::TransformerControlMode 230
Table 260 – Attributes of Wires::RatioTapChangerTablePoint 231
Table 261 – Association ends of Wires::RatioTapChangerTablePoint with other classes 231
Table 262 – Attributes of Wires::ACLineSegment 231
Table 263 – Association ends of Wires::ACLineSegment with other classes 232
Table 264 – Attributes of Wires::Recloser 233
Table 265 – Association ends of Wires::Recloser with other classes 233
Table 266 – Attributes of Wires::CompositeSwitch 234
Table 267 – Association ends of Wires::CompositeSwitch with other classes 234
Table 268 – Attributes of Wires::TransformerEnd 235
Table 269 – Association ends of Wires::TransformerEnd with other classes 235
Table 270 – Attributes of Wires::Sectionaliser 236
Table 271 – Association ends of Wires::Sectionaliser with other classes 236
Table 272 – Attributes of Wires::VoltageControlZone 237
Table 273 – Association ends of Wires::VoltageControlZone with other classes 237
Table 274 – Attributes of Wires::EnergySource 238
Table 275 – Association ends of Wires::EnergySource with other classes 238
Table 276 – Attributes of Wires::SynchronousMachine 239
Table 277 – Association ends of Wires::SynchronousMachine with other classes 241
Table 278 – Literals of Wires::RegulatingControlModeKind 241
Table 279 – Attributes of Wires::Clamp 242
Table 280 – Association ends of Wires::Clamp with other classes 242
Table 281 – Attributes of Wires::TransformerTankEnd 243
Table 282 – Association ends of Wires::TransformerTankEnd with other classes 243
Table 283 – Attributes of Wires::PhaseTapChanger 244
Table 284 – Association ends of Wires::PhaseTapChanger with other classes 244
Table 285 – Attributes of Wires::ACLineSegmentPhase 245
Table 286 – Association ends of Wires::ACLineSegmentPhase with other classes 245
Table 287 – Attributes of Wires::RatioTapChangerTable 245
Table 288 – Association ends of Wires::RatioTapChangerTable with other classes 245
Table 289 – Attributes of Wires::RotatingMachine 246
Table 290 – Association ends of Wires::RotatingMachine with other classes 246

AVA Documents
Document Sharing Hub
Full document details: BS EN 61970-301:2017

Table 291 – Attributes of Wires::RegulatingControl 247
Table 292 – Association ends of Wires::RegulatingControl with other classes 248
Table 293 – Attributes of Wires::PhaseImpedanceData 248
Table 294 – Association ends of Wires::PhaseImpedanceData with other classes 249
Table 295 – Attributes of Wires::ShuntCompensator 249
Table 296 – Association ends of Wires::ShuntCompensator with other classes 250
Table 297 – Attributes of Wires::EarthFaultCompensator 250
Table 298 – Association ends of Wires::EarthFaultCompensator with other classes 251
Table 299 – Attributes of Wires::MutualCoupling 251
Table 300 – Association ends of Wires::MutualCoupling with other classes 252
Table 301 – Attributes of Wires::Cut 252
Table 302 – Association ends of Wires::Cut with other classes 253
Table 303 – Attributes of Wires::ReactiveCapabilityCurve 254
Table 304 – Association ends of Wires::ReactiveCapabilityCurve with other classes 254
Table 305 – Attributes of Wires::Switch 255
Table 306 – Association ends of Wires::Switch with other classes 255
Table 307 – Attributes of Wires::StaticVarCompensator 256
Table 308 – Association ends of Wires::StaticVarCompensator with other classes 257
Table 309 – Literals of Wires::CoolantType 257
Table 310 – Attributes of Wires::ProtectedSwitch 257
Table 311 – Association ends of Wires::ProtectedSwitch with other classes 258
Table 312 – Attributes of Wires::EnergyConsumer 259
Table 313 – Association ends of Wires::EnergyConsumer with other classes 259
Table 314 – Attributes of Wires::Junction 260
Table 315 – Association ends of Wires::Junction with other classes 260
Table 316 – Attributes of Wires::PhaseTapChangerLinear 261
Table 317 – Association ends of Wires::PhaseTapChangerLinear with other classes 262
Table 318 – Attributes of Wires::Conductor 262
Table 319 – Association ends of Wires::Conductor with other classes 263
Table 320 – Attributes of Wires::PerLengthImpedance 263
Table 321 – Association ends of Wires::PerLengthImpedance with other classes 263
Table 322 – Attributes of Wires::FrequencyConverter 264
Table 323 – Association ends of Wires::FrequencyConverter with other classes 264
Table 324 – Attributes of Wires::Plant 265
Table 325 – Association ends of Wires::Plant with other classes 265
Table 326 – Attributes of Wires::PhaseTapChangerTablePoint 265
Table 327 – Association ends of Wires::PhaseTapChangerTablePoint with other classes 266
Table 328 – Attributes of Wires::LoadBreakSwitch 266
Table 329 – Association ends of Wires::LoadBreakSwitch with other classes 266
Table 330 – Literals of Wires::PetersenCoilModeKind 267
Table 331 – Literals of Wires::SynchronousMachineKind 267
Table 332 – Attributes of Wires::Connector 268

AVA Documents
Document Sharing Hub
Full document details: BS EN 61970-301:2017

Table 333 – Association ends of Wires::Connector with other classes 268
Table 334 – Attributes of Wires::AsynchronousMachine 269
Table 335 – Association ends of Wires::AsynchronousMachine with other classes 270
Table 336 – Attributes of Wires::TapChanger 270
Table 337 – Association ends of Wires::TapChanger with other classes 271
Table 338 – Literals of Wires::ShortCircuitRotorKind 272
Table 339 – Literals of Wires::WindingConnection 272
Table 340 – Attributes of Wires::ExternalNetworkInjection 272
Table 341 – Association ends of Wires::ExternalNetworkInjection with other classes 274
Table 342 – Literals of Wires::AsynchronousMachineKind 274
Table 343 – Attributes of Wires::LinearShuntCompensator 274
Table 344 – Association ends of Wires::LinearShuntCompensator with other classes 275
Table 345 – Attributes of Wires::NonlinearShuntCompensator 276
Table 346 – Association ends of Wires::NonlinearShuntCompensator with other classes 276
Table 347 – Attributes of Wires::NonlinearShuntCompensatorPoint 277
Table 348 – Association ends of Wires::NonlinearShuntCompensatorPoint with other classes 277
Table 349 – Attributes of Wires::LinearShuntCompensatorPhase 278
Table 350 – Association ends of Wires::LinearShuntCompensatorPhase with other classes 278
Table 351 – Attributes of Wires::NonlinearShuntCompensatorPhase 278
Table 352 – Association ends of Wires::NonlinearShuntCompensatorPhase with other classes 279
Table 353 – Attributes of Wires::NonlinearShuntCompensatorPhasePoint 279
Table 354 – Association ends of Wires::NonlinearShuntCompensatorPhasePoint with other classes 279
Table 355 – Attributes of Wires::PerLengthLineParameter 280
Table 356 – Association ends of Wires::PerLengthLineParameter with other classes 280
Table 357 – Attributes of Wires::TapChangerTablePoint 280
Table 358 – Attributes of Wires::PhaseTapChangerTabular 281
Table 359 – Association ends of Wires::PhaseTapChangerTabular with other classes 281
Table 360 – Attributes of Wires::PowerElectronicsConnection 282
Table 361 – Association ends of Wires::PowerElectronicsConnection with other classes 283
Table 362 – Attributes of GenerationTrainingSimulation::BWRSteamSupply 285
Table 363 – Association ends of GenerationTrainingSimulation::BWRSteamSupply with other classes 286
Table 364 – Literals of GenerationTrainingSimulation::BoilerControlMode 286
Table 365 – Attributes of GenerationTrainingSimulation::CTTempActivePowerCurve 286
Table 366 – Association ends of GenerationTrainingSimulation::CTTempActivePowerCurve with other classes 287
Table 367 – Attributes of GenerationTrainingSimulation::CombustionTurbine 287
Table 368 – Association ends of GenerationTrainingSimulation::CombustionTurbine with other classes 288
Table 369 – Attributes of GenerationTrainingSimulation::DrumBoiler 288

Documents
Document Sharing Hub
Full document details: BS EN 61970-301:2017

Table 370 – Association ends of GenerationTrainingSimulation::DrumBoiler with other classes 289

Table 371 – Attributes of GenerationTrainingSimulation::FossilSteamSupply 289

Table 372 – Association ends of GenerationTrainingSimulation::FossilSteamSupply with other classes 290

Table 373 – Attributes of GenerationTrainingSimulation::HeatRecoveryBoiler 291

Table 374 – Association ends of GenerationTrainingSimulation::HeatRecoveryBoiler with other classes 292

Table 375 – Attributes of GenerationTrainingSimulation::HydroTurbine 292

Table 376 – Association ends of GenerationTrainingSimulation::HydroTurbine with other classes 293

Table 377 – Attributes of GenerationTrainingSimulation::PWRSteamSupply 293

Table 378 – Association ends of GenerationTrainingSimulation::PWRSteamSupply with other classes 294

Table 379 – Attributes of GenerationTrainingSimulation::PrimeMover 294

Table 380 – Association ends of GenerationTrainingSimulation::PrimeMover with other classes 294

Table 381 – Attributes of GenerationTrainingSimulation::SteamSupply 295

Table 382 – Association ends of GenerationTrainingSimulation::SteamSupply with other classes 295

Table 383 – Attributes of GenerationTrainingSimulation::SteamTurbine 295

Table 384 – Association ends of GenerationTrainingSimulation::SteamTurbine with other classes 296

Table 385 – Attributes of GenerationTrainingSimulation::Subcritical 296

Table 386 – Association ends of GenerationTrainingSimulation::Subcritical with other classes 297

Table 387 – Attributes of GenerationTrainingSimulation::Supercritical 298

Table 388 – Association ends of GenerationTrainingSimulation::Supercritical with other classes 299

Table 389 – Literals of GenerationTrainingSimulation::TurbineType 299

Table 390 – Attributes of Production::TargetLevelSchedule 304

Table 391 – Association ends of Production::TargetLevelSchedule with other classes 305

Table 392 – Attributes of Production::PenstockLossCurve 305

Table 393 – Association ends of Production::PenstockLossCurve with other classes 306

Table 394 – Attributes of Production::HydroGeneratingUnit 306

Table 395 – Association ends of Production::HydroGeneratingUnit with other classes 307

Table 396 – Attributes of Production::AirCompressor 308

Table 397 – Association ends of Production::AirCompressor with other classes 308

Table 398 – Attributes of Production::HydroPowerPlant 309

Table 399 – Association ends of Production::HydroPowerPlant with other classes 309

Table 400 – Literals of Production::GeneratorControlSource 310

Table 401 – Attributes of Production::InflowForecast 310

Table 402 – Association ends of Production::InflowForecast with other classes 310

Table 403 – Attributes of Production::SteamSendoutSchedule 311

Table 404 – Association ends of Production::SteamSendoutSchedule with other classes 311

AVA Documents
Document Sharing Hub

Full document details: BS EN 61970-301:2017

Table 405 – Attributes of Production::HydroPump 311
Table 406 – Association ends of Production::HydroPump with other classes 312
Table 407 – Literals of Production::HydroEnergyConversionKind 312
Table 408 – Attributes of Production::Classification 313
Table 409 – Attributes of Production::HeatInputCurve 313
Table 410 – Association ends of Production::HeatInputCurve with other classes 314
Table 411 – Attributes of Production::GenUnitOpCostCurve 314
Table 412 – Association ends of Production::GenUnitOpCostCurve with other classes 314
Table 413 – Literals of Production::EmissionType 315
Table 414 – Attributes of Production::ThermalGeneratingUnit 315
Table 415 – Association ends of Production::ThermalGeneratingUnit with other classes 316
Table 416 – Attributes of Production::NuclearGeneratingUnit 317
Table 417 – Association ends of Production::NuclearGeneratingUnit with other classes 318
Table 418 – Attributes of Production::Reservoir 319
Table 419 – Association ends of Production::Reservoir with other classes 320
Table 420 – Attributes of Production::WindGeneratingUnit 320
Table 421 – Association ends of Production::WindGeneratingUnit with other classes 321
Table 422 – Attributes of Production::StartMainFuelCurve 322
Table 423 – Association ends of Production::StartMainFuelCurve with other classes 322
Table 424 – Attributes of Production::GrossToNetActivePowerCurve 323
Table 425 – Association ends of Production::GrossToNetActivePowerCurve with other classes 323
Table 426 – Attributes of Production::EmissionAccount 324
Table 427 – Association ends of Production::EmissionAccount with other classes 324
Table 428 – Attributes of Production::HeatRateCurve 324
Table 429 – Association ends of Production::HeatRateCurve with other classes 325
Table 430 – Attributes of Production::HeatRate 325
Table 431 – Attributes of Production::CAESPlant 326
Table 432 – Association ends of Production::CAESPlant with other classes 326
Table 433 – Literals of Production::HydroPlantStorageKind 326
Table 434 – Attributes of Production::GeneratingUnit 327
Table 435 – Association ends of Production::GeneratingUnit with other classes 329
Table 436 – Attributes of Production::EmissionCurve 329
Table 437 – Association ends of Production::EmissionCurve with other classes 330
Table 438 – Attributes of Production::ShutdownCurve 330
Table 439 – Association ends of Production::ShutdownCurve with other classes 331
Table 440 – Literals of Production::FuelType 331
Table 441 – Attributes of Production::FuelAllocationSchedule 331
Table 442 – Association ends of Production::FuelAllocationSchedule with other classes 332
Table 443 – Attributes of Production::CombinedCyclePlant 332
Table 444 – Association ends of Production::CombinedCyclePlant with other classes 333
Table 445 – Attributes of Production::TailbayLossCurve 333
Table 446 – Association ends of Production::TailbayLossCurve with other classes 333

AVA Documents
Document Sharing Hub
Full document details: BS EN 61970-301:2017

Table 447 – Attributes of Production::IncrementalHeatRateCurve 334
Table 448 – Association ends of Production::IncrementalHeatRateCurve with other classes 334
Table 449 – Attributes of Production::FossilFuel 335
Table 450 – Association ends of Production::FossilFuel with other classes 335
Table 451 – Literals of Production::EmissionValueSource 336
Table 452 – Attributes of Production::StartIgnFuelCurve 336
Table 453 – Association ends of Production::StartIgnFuelCurve with other classes 336
Table 454 – Attributes of Production::HydroPumpOpSchedule 337
Table 455 – Association ends of Production::HydroPumpOpSchedule with other classes 337
Table 456 – Attributes of Production::HydroGeneratingEfficiencyCurve 337
Table 457 – Association ends of Production::HydroGeneratingEfficiencyCurve with other classes 338
Table 458 – Attributes of Production::Emission 338
Table 459 – Attributes of Production::CostPerHeatUnit 338
Table 460 – Attributes of Production::CogenerationPlant 339
Table 461 – Association ends of Production::CogenerationPlant with other classes 339
Table 462 – Attributes of Production::StartRampCurve 340
Table 463 – Association ends of Production::StartRampCurve with other classes 340
Table 464 – Literals of Production::GeneratorControlMode 340
Table 465 – Attributes of Production::LevelVsVolumeCurve 341
Table 466 – Association ends of Production::LevelVsVolumeCurve with other classes 341
Table 467 – Attributes of Production::StartupModel 341
Table 468 – Association ends of Production::StartupModel with other classes 342
Table 469 – Attributes of Production::GenUnitOpSchedule 342
Table 470 – Association ends of Production::GenUnitOpSchedule with other classes 343
Table 471 – Literals of Production::WindGenUnitKind 343
Table 472 – Attributes of Production::SolarGeneratingUnit 343
Table 473 – Association ends of Production::SolarGeneratingUnit with other classes 344
Table 474 – Attributes of Production::PowerElectronicsUnit 345
Table 475 – Association ends of Production::PowerElectronicsUnit with other classes 345
Table 476 – Attributes of Production::PowerElectronicsWindUnit 346
Table 477 – Association ends of Production::PowerElectronicsWindUnit with other classes 346
Table 478 – Attributes of DC::ACDCConverter 352
Table 479 – Association ends of DC::ACDCConverter with other classes 353
Table 480 – Attributes of DC::ACDCConverterDCTerminal 354
Table 481 – Association ends of DC::ACDCConverterDCTerminal with other classes 354
Table 482 – Attributes of DC::DCBaseTerminal 354
Table 483 – Association ends of DC::DCBaseTerminal with other classes 355
Table 484 – Attributes of DC::DCConverterUnit 355
Table 485 – Association ends of DC::DCConverterUnit with other classes 355
Table 486 – Attributes of DC::DCLine 356

AVA Documents
Document Sharing Hub

Full document details: BS EN 61970-301:2017

Table 487 – Association ends of DC::DCLine with other classes 356
Table 488 – Attributes of DC::DCSeriesDevice 357
Table 489 – Association ends of DC::DCSeriesDevice with other classes 357
Table 490 – Literals of DC::VsQpccControlKind 357
Table 491 – Literals of DC::CsPpccControlKind 358
Table 492 – Literals of DC::CsOperatingModeKind 358
Table 493 – Attributes of DC::CsConverter 358
Table 494 – Association ends of DC::CsConverter with other classes 359
Table 495 – Attributes of DC::DCBreaker 360
Table 496 – Association ends of DC::DCBreaker with other classes 360
Table 497 – Attributes of DC::DCEquipmentContainer 361
Table 498 – Association ends of DC::DCEquipmentContainer with other classes 361
Table 499 – Attributes of DC::DCBusbar 361
Table 500 – Association ends of DC::DCBusbar with other classes 362
Table 501 – Literals of DC::DCConverterOperatingModeKind 362
Table 502 – Attributes of DC::DCChopper 362
Table 503 – Association ends of DC::DCChopper with other classes 363
Table 504 – Attributes of DC::DCDisconnector 363
Table 505 – Association ends of DC::DCDisconnector with other classes 363
Table 506 – Attributes of DC::DCGround 364
Table 507 – Association ends of DC::DCGround with other classes 364
Table 508 – Attributes of DC::DCLineSegment 365
Table 509 – Association ends of DC::DCLineSegment with other classes 365
Table 510 – Attributes of DC::DCShunt 366
Table 511 – Association ends of DC::DCShunt with other classes 366
Table 512 – Attributes of DC::DCConductingEquipment 366
Table 513 – Association ends of DC::DCConductingEquipment with other classes 367
Table 514 – Attributes of DC::DCSwitch 367
Table 515 – Association ends of DC::DCSwitch with other classes 367
Table 516 – Attributes of DC::DCNode 368
Table 517 – Association ends of DC::DCNode with other classes 368
Table 518 – Attributes of DC::DCTopologicalIsland 369
Table 519 – Association ends of DC::DCTopologicalIsland with other classes 369
Table 520 – Literals of DC::DCPolarityKind 369
Table 521 – Attributes of DC::PerLengthDCLineParameter 369
Table 522 – Association ends of DC::PerLengthDCLineParameter with other classes 370
Table 523 – Attributes of DC::DCTerminal 370
Table 524 – Association ends of DC::DCTerminal with other classes 370
Table 525 – Literals of DC::VsPpccControlKind 371
Table 526 – Attributes of DC::VsCapabilityCurve 371
Table 527 – Association ends of DC::VsCapabilityCurve with other classes 371
Table 528 – Attributes of DC::VsConverter 372
Table 529 – Association ends of DC::VsConverter with other classes 373

AVA Documents
Document Sharing Hub
Full document details: BS EN 61970-301:2017

Table 530 – Attributes of LoadModel::ConformLoad 375
Table 531 – Association ends of LoadModel::ConformLoad with other classes 375
Table 532 – Attributes of LoadModel::ConformLoadGroup 376
Table 533 – Association ends of LoadModel::ConformLoadGroup with other classes 376
Table 534 – Attributes of LoadModel::ConformLoadSchedule 377
Table 535 – Association ends of LoadModel::ConformLoadSchedule with other classes 377
Table 536 – Attributes of LoadModel::DayType 377
Table 537 – Association ends of LoadModel::DayType with other classes 378
Table 538 – Attributes of LoadModel::EnergyArea 378
Table 539 – Association ends of LoadModel::EnergyArea with other classes 378
Table 540 – Attributes of LoadModel::LoadArea 378
Table 541 – Association ends of LoadModel::LoadArea with other classes 379
Table 542 – Attributes of LoadModel::LoadGroup 379
Table 543 – Association ends of LoadModel::LoadGroup with other classes 379
Table 544 – Attributes of LoadModel::LoadResponseCharacteristic 380
Table 545 – Association ends of LoadModel::LoadResponseCharacteristic with other classes 381
Table 546 – Attributes of LoadModel::NonConformLoad 381
Table 547 – Association ends of LoadModel::NonConformLoad with other classes 381
Table 548 – Attributes of LoadModel::NonConformLoadGroup 382
Table 549 – Association ends of LoadModel::NonConformLoadGroup with other classes 382
Table 550 – Attributes of LoadModel::NonConformLoadSchedule 383
Table 551 – Association ends of LoadModel::NonConformLoadSchedule with other classes 383
Table 552 – Attributes of LoadModel::PowerCutZone 383
Table 553 – Association ends of LoadModel::PowerCutZone with other classes 384
Table 554 – Attributes of LoadModel::Season 384
Table 555 – Association ends of LoadModel::Season with other classes 384
Table 556 – Attributes of LoadModel::SeasonDayTypeSchedule 385
Table 557 – Association ends of LoadModel::SeasonDayTypeSchedule with other classes 385
Table 558 – Attributes of LoadModel::StationSupply 385
Table 559 – Association ends of LoadModel::StationSupply with other classes 386
Table 560 – Attributes of LoadModel::SubLoadArea 386
Table 561 – Association ends of LoadModel::SubLoadArea with other classes 387
Table 562 – Attributes of AuxiliaryEquipment::AuxiliaryEquipment 389
Table 563 – Association ends of AuxiliaryEquipment::AuxiliaryEquipment with other classes 389
Table 564 – Attributes of AuxiliaryEquipment::CurrentTransformer 389
Table 565 – Association ends of AuxiliaryEquipment::CurrentTransformer with other classes 390
Table 566 – Attributes of AuxiliaryEquipment::FaultIndicator 390
Table 567 – Association ends of AuxiliaryEquipment::FaultIndicator with other classes 391
Table 568 – Attributes of AuxiliaryEquipment::PostLineSensor 391

Documents
Document Sharing Hub

Full document details: BS EN 61970-301:2017

Table 569 – Association ends of AuxiliaryEquipment::PostLineSensor with other classes 391
Table 570 – Attributes of AuxiliaryEquipment::PotentialTransformer 392
Table 571 – Association ends of AuxiliaryEquipment::PotentialTransformer with other classes 392
Table 572 – Literals of AuxiliaryEquipment::PotentialTransformerKind 393
Table 573 – Attributes of AuxiliaryEquipment::Sensor 393
Table 574 – Association ends of AuxiliaryEquipment::Sensor with other classes 393
Table 575 – Attributes of AuxiliaryEquipment::SurgeArrester 394
Table 576 – Association ends of AuxiliaryEquipment::SurgeArrester with other classes 394
Table 577 – Attributes of AuxiliaryEquipment::WaveTrap 395
Table 578 – Association ends of AuxiliaryEquipment::WaveTrap with other classes 395
Table 579 – Attributes of Protection::CurrentRelay 396
Table 580 – Association ends of Protection::CurrentRelay with other classes 397
Table 581 – Attributes of Protection::ProtectionEquipment 397
Table 582 – Association ends of Protection::ProtectionEquipment with other classes 398
Table 583 – Attributes of Protection::RecloseSequence 398
Table 584 – Association ends of Protection::RecloseSequence with other classes 399
Table 585 – Attributes of Protection::SynchrocheckRelay 399
Table 586 – Association ends of Protection::SynchrocheckRelay with other classes 400
Table 587 – Attributes of Equivalents::EquivalentBranch 402
Table 588 – Association ends of Equivalents::EquivalentBranch with other classes 403
Table 589 – Attributes of Equivalents::EquivalentEquipment 404
Table 590 – Association ends of Equivalents::EquivalentEquipment with other classes 404
Table 591 – Attributes of Equivalents::EquivalentInjection 405
Table 592 – Association ends of Equivalents::EquivalentInjection with other classes 406
Table 593 – Attributes of Equivalents::EquivalentNetwork 407
Table 594 – Association ends of Equivalents::EquivalentNetwork with other classes 407
Table 595 – Attributes of Equivalents::EquivalentShunt 407
Table 596 – Association ends of Equivalents::EquivalentShunt with other classes 408
Table 597 – Attributes of Meas::Accumulator 412
Table 598 – Association ends of Meas::Accumulator with other classes 412
Table 599 – Attributes of Meas::AccumulatorLimit 412
Table 600 – Association ends of Meas::AccumulatorLimit with other classes 413
Table 601 – Attributes of Meas::AccumulatorLimitSet 413
Table 602 – Association ends of Meas::AccumulatorLimitSet with other classes 413
Table 603 – Attributes of Meas::AccumulatorReset 414
Table 604 – Association ends of Meas::AccumulatorReset with other classes 414
Table 605 – Attributes of Meas::AccumulatorValue 414
Table 606 – Association ends of Meas::AccumulatorValue with other classes 415
Table 607 – Attributes of Meas::Analog 415
Table 608 – Association ends of Meas::Analog with other classes 416
Table 609 – Attributes of Meas::AnalogControl 416
Table 610 – Association ends of Meas::AnalogControl with other classes 416

AVA Documents
Document Sharing Hub

Full document details: BS EN 61970-301:2017

Table 611 – Attributes of Meas::AnalogLimit 417
Table 612 – Association ends of Meas::AnalogLimit with other classes 417
Table 613 – Attributes of Meas::AnalogLimitSet 417
Table 614 – Association ends of Meas::AnalogLimitSet with other classes 417
Table 615 – Attributes of Meas::AnalogValue 418
Table 616 – Association ends of Meas::AnalogValue with other classes 418
Table 617 – Attributes of Meas::Command 418
Table 618 – Association ends of Meas::Command with other classes 419
Table 619 – Attributes of Meas::Control 419
Table 620 – Association ends of Meas::Control with other classes 420
Table 621 – Attributes of Meas::Discrete 420
Table 622 – Association ends of Meas::Discrete with other classes 420
Table 623 – Attributes of Meas::DiscreteCommand 421
Table 624 – Association ends of Meas::DiscreteCommand with other classes 421
Table 625 – Attributes of Meas::DiscreteValue 421
Table 626 – Association ends of Meas::DiscreteValue with other classes 422
Table 627 – Attributes of Meas::Limit 422
Table 628 – Association ends of Meas::Limit with other classes 422
Table 629 – Attributes of Meas::LimitSet 423
Table 630 – Association ends of Meas::LimitSet with other classes 423
Table 631 – Attributes of Meas::Measurement 424
Table 632 – Association ends of Meas::Measurement with other classes 424
Table 633 – Attributes of Meas::MeasurementValue 425
Table 634 – Association ends of Meas::MeasurementValue with other classes 425
Table 635 – Attributes of Meas::MeasurementValueQuality 425
Table 636 – Association ends of Meas::MeasurementValueQuality with other classes 426
Table 637 – Attributes of Meas::MeasurementValueSource 426
Table 638 – Association ends of Meas::MeasurementValueSource with other classes 426
Table 639 – Attributes of Meas::Quality61850 427
Table 640 – Attributes of Meas::RaiseLowerCommand 428
Table 641 – Association ends of Meas::RaiseLowerCommand with other classes 428
Table 642 – Attributes of Meas::SetPoint 428
Table 643 – Association ends of Meas::SetPoint with other classes 429
Table 644 – Attributes of Meas::StringMeasurement 429
Table 645 – Association ends of Meas::StringMeasurement with other classes 429
Table 646 – Attributes of Meas::StringMeasurementValue 430
Table 647 – Association ends of Meas::StringMeasurementValue with other classes 430
Table 648 – Literals of Meas::Validity 430
Table 649 – Attributes of Meas::ValueAliasSet 431
Table 650 – Association ends of Meas::ValueAliasSet with other classes 431
Table 651 – Attributes of Meas::ValueToAlias 431
Table 652 – Association ends of Meas::ValueToAlias with other classes 432
Table 653 – Attributes of SCADA::CommunicationLink 433

AVA Documents
Document Sharing Hub
Full document details: BS EN 61970-301:2017

Table 654 – Association ends of SCADA::CommunicationLink with other classes 434
Table 655 – Attributes of SCADA::RemoteControl 434
Table 656 – Association ends of SCADA::RemoteControl with other classes 434
Table 657 – Attributes of SCADA::RemotePoint 435
Table 658 – Association ends of SCADA::RemotePoint with other classes 435
Table 659 – Attributes of SCADA::RemoteSource 435
Table 660 – Association ends of SCADA::RemoteSource with other classes 435
Table 661 – Attributes of SCADA::RemoteUnit 436
Table 662 – Association ends of SCADA::RemoteUnit with other classes 436
Table 663 – Literals of SCADA::RemoteUnitType 436
Table 664 – Literals of SCADA::Source 437
Table 665 – Attributes of ControlArea::AltGeneratingUnitMeas 440
Table 666 – Association ends of ControlArea::AltGeneratingUnitMeas with other classes 440
Table 667 – Attributes of ControlArea::AltTieMeas 440
Table 668 – Association ends of ControlArea::AltTieMeas with other classes 440
Table 669 – Attributes of ControlArea::ControlArea 441
Table 670 – Association ends of ControlArea::ControlArea with other classes 441
Table 671 – Attributes of ControlArea::ControlAreaGeneratingUnit 442
Table 672 – Association ends of ControlArea::ControlAreaGeneratingUnit with other classes 442
Table 673 – Literals of ControlArea::ControlAreaTypeKind 442
Table 674 – Attributes of ControlArea::TieFlow 442
Table 675 – Association ends of ControlArea::TieFlow with other classes 443
Table 676 – Attributes of Contingency::Contingency 444
Table 677 – Association ends of Contingency::Contingency with other classes 444
Table 678 – Attributes of Contingency::ContingencyElement 444
Table 679 – Association ends of Contingency::ContingencyElement with other classes 444
Table 680 – Attributes of Contingency::ContingencyEquipment 445
Table 681 – Association ends of Contingency::ContingencyEquipment with other classes 445
Table 682 – Literals of Contingency::ContingencyEquipmentStatusKind 445
Table 683 – Attributes of StateVariables::SvInjection 447
Table 684 – Association ends of StateVariables::SvInjection with other classes 447
Table 685 – Attributes of StateVariables::SvPowerFlow 447
Table 686 – Association ends of StateVariables::SvPowerFlow with other classes 447
Table 687 – Attributes of StateVariables::SvShuntCompensatorSections 448
Table 688 – Association ends of StateVariables::SvShuntCompensatorSections with other classes 448
Table 689 – Attributes of StateVariables::SvStatus 448
Table 690 – Association ends of StateVariables::SvStatus with other classes 448
Table 691 – Attributes of StateVariables::SvTapStep 448
Table 692 – Association ends of StateVariables::SvTapStep with other classes 449
Table 693 – Attributes of StateVariables::SvVoltage 449

AVA Documents
Document Sharing Hub
Full document details: BS EN 61970-301:2017

Table 694 – Association ends of StateVariables::SvVoltage with other classes 449
Table A.1 – Attributes of OperationalLimitType 450
Table A.2 – Literals of LimitTypeKind 450
Table A.3 – Attributes of IdentifiedObject 451
Table A.4 – Association ends of EnergySchedulingType 452
Table A.5 – Attributes of ConnectivityNode 452
Table A.6 – Attributes of TopologicalNode 453

Documents
Document Sharing Hub

Full document details: BS EN 61970-301:2017

INTERNATIONAL ELECTROTECHNICAL COMMISSION

_____

ENERGY MANAGEMENT SYSTEM APPLICATION PROGRAM INTERFACE (EMS-API) –

Part 301: Common information model (CIM) base

FOREWORD

1) The International Electrotechnical Commission (IEC) is a worldwide organization for standardization comprising all national electrotechnical committees (IEC National Committees). The object of IEC is to promote international co-operation on all questions concerning standardization in the electrical and electronic fields. To this end and in addition to other activities, IEC publishes International Standards, Technical Specifications, Technical Reports, Publicly Available Specifications (PAS) and Guides (hereafter referred to as "IEC Publication(s)"). Their preparation is entrusted to technical committees; any IEC National Committee interested in the subject dealt with may participate in this preparatory work. International, governmental and non-governmental organizations liaising with the IEC also participate in this preparation. IEC collaborates closely with the International Organization for Standardization (ISO) in accordance with conditions determined by agreement between the two organizations.
2) The formal decisions or agreements of IEC on technical matters express, as nearly as possible, an international consensus of opinion on the relevant subjects since each technical committee has representation from all interested IEC National Committees.
3) IEC Publications have the form of recommendations for international use and are accepted by IEC National Committees in that sense. While all reasonable efforts are made to ensure that the technical content of IEC Publications is accurate, IEC cannot be held responsible for the way in which they are used or for any misinterpretation by any end user.
4) In order to promote international uniformity, IEC National Committees undertake to apply IEC Publications transparently to the maximum extent possible in their national and regional publications. Any divergence between any IEC Publication and the corresponding national or regional publication shall be clearly indicated in the latter.
5) IEC itself does not provide any attestation of conformity. Independent certification bodies provide conformity assessment services and, in some areas, access to IEC marks of conformity. IEC is not responsible for any services carried out by independent certification bodies.
6) All users should ensure that they have the latest edition of this publication.
7) No liability shall attach to IEC or its directors, employees, servants or agents including individual experts and members of its technical committees and IEC National Committees for any personal injury, property damage or other damage of any nature whatsoever, whether direct or indirect, or for costs (including legal fees) and expenses arising out of the publication, use of, or reliance upon, this IEC Publication or any other IEC Publications.
8) Attention is drawn to the Normative references cited in this publication. Use of the referenced publications is indispensable for the correct application of this publication.

International Standard IEC 61970-301 has been prepared by IEC technical committee 57: Power systems management and associated information exchange.

This sixth edition cancels and replaces the fifth edition, published in 2013. This sixth edition constitutes a technical revision.

This edition includes the following significant technical changes with respect to the previous edition:

a) new model for grounding including Petersen coils;
b) models for HVDC;
c) addition of Static Var Compensation models;
d) phase shift transformer updates - the section has been added;
e) short circuit calculations based on IEC 60909;
f) addition of non-linear shunt compensator;

Documents
Document Sharing Hub

Full document details: BS EN 61970-301:2017

g) addition of model for steady state calculation inputs, Steady State Hypothesis;

h) addition of base frequency model;

i) corrections of several smaller issues, e.g. issues found at ENTSO-E interoperability tests;

j) UML clean up;

k) new model for PowerElectronicUnits and their connection to the AC network added;

l) new section on relation between TapChanger.ltcFlag and TapChanger.TapChangerControl;

m) Annex A with custom extensions added.

The text of this standard is based on the following documents:

FDIS	Report on voting
57/1779/FDIS	57/1788/RVD

Full information on the voting for the approval of this standard can be found in the report on voting indicated in the above table.

This publication has been drafted in accordance with the ISO/IEC Directives, Part 2.

A list of all parts of the IEC 61970 series, under the general title: *Energy management system application program interface (EMS-API)*, can be found on the IEC website.

The committee has decided that the contents of this publication will remain unchanged until the stability date indicated on the IEC website under "http://webstore.iec.ch" in the data related to the specific publication. At this date, the publication will be

- reconfirmed,
- withdrawn,
- replaced by a revised edition, or
- amended.

IMPORTANT – The 'colour inside' logo on the cover page of this publication indicates that it contains colours which are considered to be useful for the correct understanding of its contents. Users should therefore print this document using a colour printer.

Documents
Document Sharing Hub

Full document details: BS EN 61970-301:2017

INTRODUCTION

This document is one of the IEC 61970 series which defines an application program interface (API) for an energy management system (EMS). IEC 61970 was originally based upon the work of the EPRI Control Center API (CCAPI) research project (RP-3654-1). The principle objectives of the EPRI CCAPI project were to:

- reduce the cost and time needed to add new applications to an EMS;
- protect the investment of existing applications or systems that are working effectively with an EMS.

The principal objective of the IEC 61970 series is to produce standards which facilitate the integration of EMS applications developed independently by different vendors, between entire EMS systems developed independently, or between an EMS system and other systems concerned with different aspects of power system operations, such as generation or distribution management systems (DMS). This is accomplished by defining application program interfaces to enable these applications or systems access to public data and exchange information independent of how such information is represented internally.

The Common Information Model (CIM) specifies the semantics for this API. The Component Interface Specifications (CIS), which are contained in other parts of the IEC 61970 series, specify the content of the messages exchanged.

The CIM is an abstract model that represents all the major objects in an electric utility enterprise typically needed to model the operational aspects of a utility. This model includes public classes and attributes for these objects, as well as the relationships between them.

This document defines the CIM Base set of packages which provide a logical view of the functional aspects of an Energy Management System including Supervisory Control and Data Acquisition (SCADA). Other functional areas are standardized in separate IEC documents that augment and reference this document. For example, IEC 61968-11 addresses distribution models and references this document. While there are multiple IEC standards dealing with different parts of the CIM, there is a single, unified information model comprising the CIM behind all these individual standards documents.

The International Electrotechnical Commission (IEC) draws attention to the fact that it is claimed that compliance with this document may involve the use of a patent concerning a computer-based implementation of an object-oriented power system model in a relational database. As such, it does not conflict with the development of any logical power system model including the Common Information Model (CIM), where implementation of the model is not defined.

The IEC takes no position concerning the evidence, validity and scope of this patent right.

The holder of this patent right has assured the IEC that he/she is willing to negotiate licences either free of charge or under reasonable and non-discriminatory terms and conditions with applicants throughout the world. In this respect, the statement of the holder of this patent right is registered with IEC. Information may be obtained from:

ICL
Wenlock Way
West Gorton
Manchester
M12 5DR
United Kingdom

Attention is drawn to the possibility that some of the elements of this document may be the subject of patent rights other than those identified above. IEC shall not be held responsible for identifying any or all such patent rights.

AVA Documents
Document Sharing Hub

Full document details: BS EN 61970-301:2017

ISO (www.iso.org/patents) and IEC (http://www.iec.ch/tctools/patent_decl.htm) maintain on-line data bases of patents relevant to their standards. Users are encouraged to consult the data bases for the most up to date information concerning patents.

Documents
Document Sharing Hub

Full document details: BS EN 61970-301:2017

ENERGY MANAGEMENT SYSTEM APPLICATION PROGRAM INTERFACE (EMS-API) –

Part 301: Common information model (CIM) base

1 Scope

The common information model (CIM) is an abstract model that represents all the major objects in an electric utility enterprise typically involved in utility operations. By providing a standard way of representing power system resources as object classes and attributes, along with their relationships, the CIM facilitates the integration of network applications developed independently by different vendors, between entire systems running network applications developed independently, or between a system running network applications and other systems concerned with different aspects of power system operations, such as generation or distribution management. SCADA is modeled to the extent necessary to support power system simulation and inter-control centre communication. The CIM facilitates integration by defining a common language (i.e. semantics) based on the CIM to enable these applications or systems to access public data and exchange information independent of how such information is represented internally.

The object classes represented in the CIM are abstract in nature and may be used in a wide variety of applications. The use of the CIM goes far beyond its application in an EMS. This document should be understood as a tool to enable integration in any domain where a common power system model is needed to facilitate interoperability and plug compatibility between applications and systems independent of any particular implementation.

Due to the size of the complete CIM, the object classes contained in the CIM are grouped into a number of logical Packages, each of which represents a certain part of the overall power system being modeled. Collections of these Packages are progressed as separate International Standards. This document specifies a Base set of packages which provide a logical view of the functional aspects of Energy Management System (EMS) information within the electric utility enterprise that is shared between all applications. Other standards specify more specific parts of the model that are needed by only certain applications. Subclause 4.3 of this document provides the current grouping of packages into standards documents.

2 Normative references

The following documents are referred to in the text in such a way that some or all of their content constitutes requirements of this document. For dated references, only the edition cited applies. For undated references, the latest edition of the referenced document (including any amendments) applies.

IEC 60050 (all parts), *International Electrotechnical Vocabulary (IEV)* (available at www.electropedia.org)

IEC 61850 (all parts), *Communication networks and systems for power utility automation*

IEC 61850-7-4:2010, *Communication networks and systems for power utility automation – Part 7-4: Basic communication structure – Compatible logical node classes and data object classes*

IEC 61968 (all parts), *Application integration at electric utilities – System interfaces for distribution management*

Documents
Document Sharing Hub

Full document details: BS EN 61970-301:2017

IEC TS 61970-2, *Energy management system application program interface (EMS-API) – Part 2: Glossary*

Object Management Group: UML 2.0 Specification – http://www.omg.org

3 Terms and definitions

For the purposes of this document, the terms and definitions given in IEC TS 61970-2, IEC 60050 and the following apply.

ISO and IEC maintain terminological databases for use in standardization at the following addresses:

- IEC Electropedia: available at http://www.electropedia.org/
- ISO Online browsing platform: available at http://www.iso.org/obp

3.1.1
energy management system
EMS
computer system comprising a software platform providing basic support services and a set of applications providing the functionality needed for the effective operation of electrical generation and transmission facilities so as to assure adequate security of energy supply at minimum cost

3.1.2
application program interface
API
set of public functions provided by an executable application component for use by other executable application components

3.1.3
unified modeling language
UML
formal and comprehensive descriptive language with diagramming techniques used to represent software systems, from requirements analysis, through design and implementation, to documentation

Note 1 to entry: UML has evolved from a collection of methods contributed by different practitioners, into an International Standard (ISO/IEC 19505, published in 2012). The CIM relies on UML for defining the model, and automated tools generate the documentation, schemas, and other artifacts directly from the UML. A basic understanding of UML is necessary to understand the CIM.

3.1.4
profile
subset of CIM classes, associations and attributes needed to accomplish a specific type of interface

Note 1 to entry: This may be expressed in XSD, RDF, and/or OWL files. A profile can be tested between applications. A profile is necessary in order to “use” the CIM. Several profiles are defined in the IEC 61968 and IEC 62325 series.

4 CIM specification

4.1 Overview

The CIM model is described in the Unified Modeling Language (UML) that is maintained as a UML file managed by a UML editing tool. The UML file exists in different formats:

- a tool proprietary format,

Documents
Document Sharing Hub

Full document details: BS EN 61970-301:2017

- a standardized xmi format.

The CIM model is described in Clause 6, which is a report generated from the UML file. The name of the UML file use to generate Clause 6 is:

- IEC 61970cim16v33_IEC 61968cim12v08_IEC 62325cim03v01a.

This file can be obtained from CIM users group.

4.2 CIM modeling notation

The CIM is defined using object-oriented modeling techniques. Specifically, the CIM specification uses the Unified Modeling Language (UML) notation, which defines the CIM as a group of packages.

Each package in the CIM contains one or more class diagrams showing graphically all the classes in that package and their relationships. Each class is then defined in text in terms of its attributes and relationships to other classes.

The UML notation is described in Object Management Group (OMG) documents and several published textbooks.

4.3 CIM packages

The CIM is partitioned into a set of packages. A package is a general purpose means of grouping related model elements. The packages have been chosen to make the model easier to design, understand and review. The common information model consists of the complete set of packages. Entities may have associations that cross many package boundaries. Each application will use information represented in several packages.

The comprehensive CIM is partitioned into groups of packages for convenience in managing and maintaining them. Packages included in IEC 61970-301 (this document) are contained within the IEC 61970 package. The IEC 61970 packages do not depend upon other outside packages. As shown in Figure 1, the IEC 61970 package and its subpackages are used as a core or base model for other CIM packages. The dashed lines indicate dependency relationships, with the arrowhead pointing from the dependent package to the package on which it has a dependency. Packages for the IEC 61968 series of standards describe additional parts of the CIM that deal with other logical views of utility operations including assets, locations, activities, consumers, documentation, work management, and metering. Packages for the IEC 62325 series of standards describe electric energy markets.

Documents
Document Sharing Hub

Full document details: BS EN 61970-301:2017

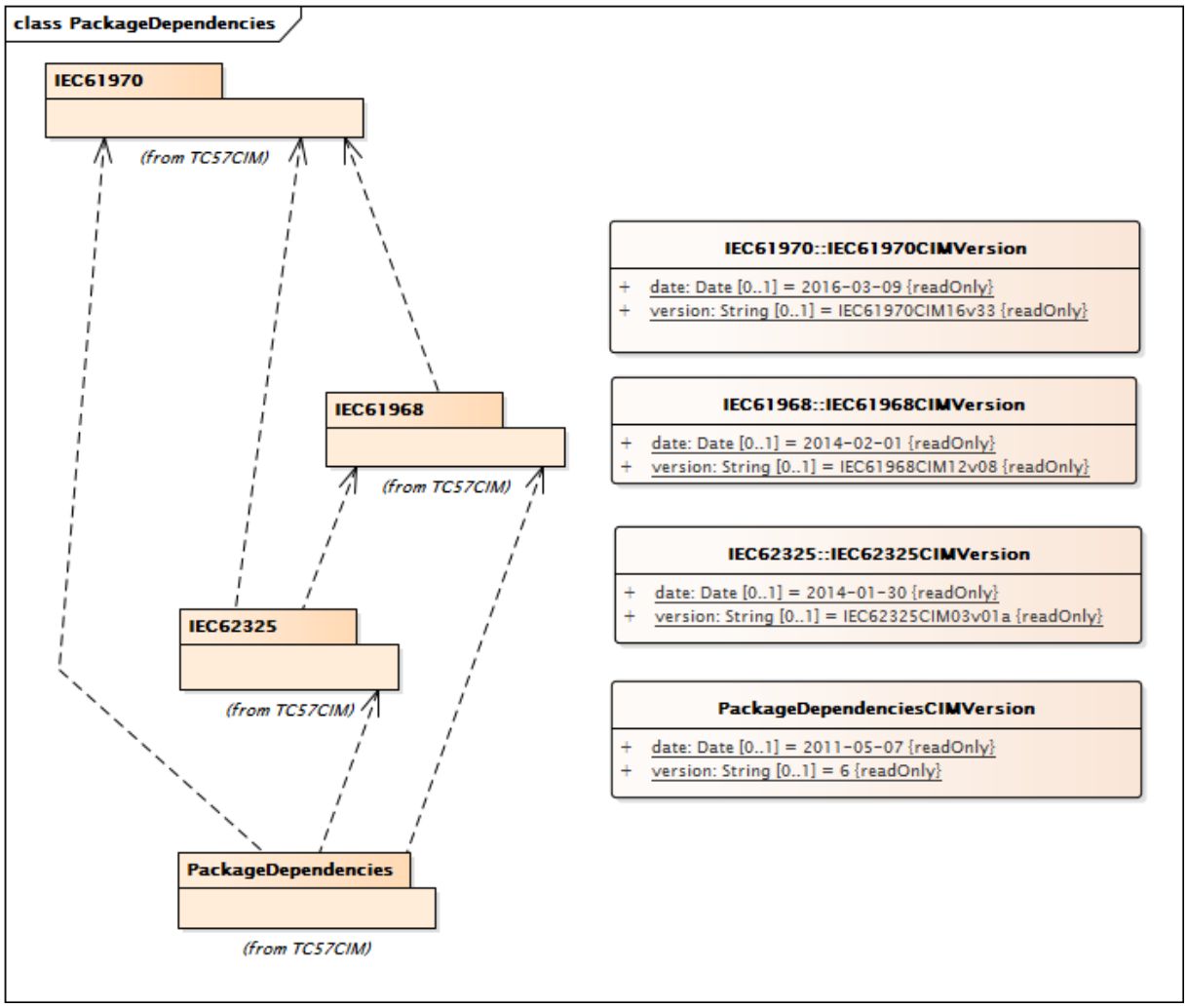

Figure 1 – Example working group package dependencies

Note that the package boundaries do not imply application boundaries. An application may use CIM entities from several packages. It is also anticipated CIM packages outside of this document will have dependencies upon some of the packages described in this document, and particularly the Domain and Core packages, though other dependencies will also exist.

Figure 2 shows the packages defined for IEC 61970-301 CIM Base and their dependency relationships.

Documents
Document Sharing Hub

Full document details: BS EN 61970-301:2017

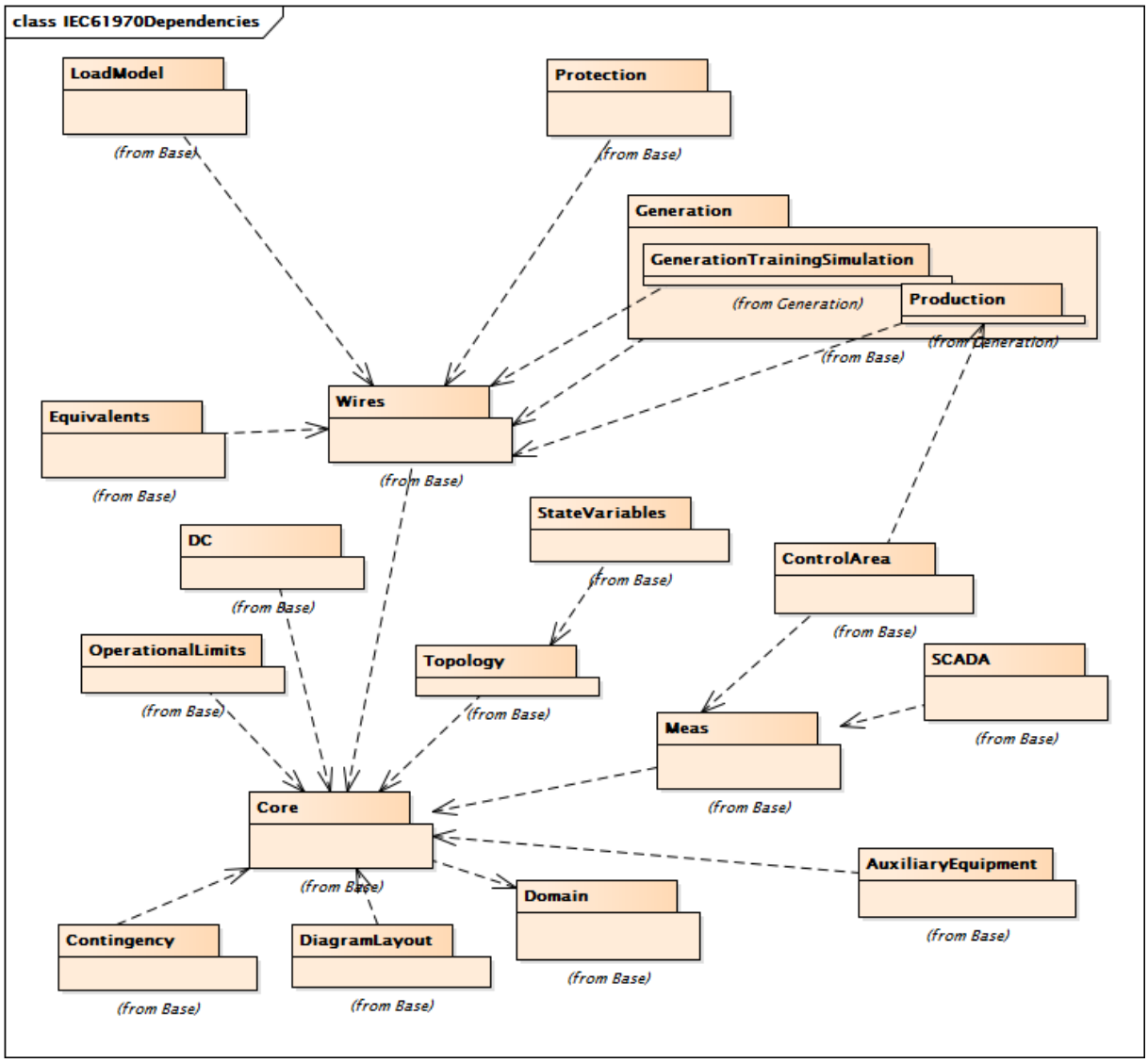

Figure 2 – CIM IEC 61970-301 package diagram

4.4 CIM classes and relationships

4.4.1 Classes

The class diagram(s) for each CIM package shows all the classes in the package and their relationships. Where relationships exist with classes in other packages, those classes may also be shown.

Classes and objects model what is in a power system that needs to be represented in a common way to power system applications. A class is a description of an object found in the real world, such as a power transformer, generator, or load that needs to be represented as part of the overall power system model in, for example, an EMS. Other types of objects include things such as schedules and measurements that EMS applications also need to process, analyze, and store. Such objects need a common representation to achieve the purposes of the EMS-API standard for plug-compatibility and interoperability. A particular object in a power system with a unique identity is modeled as an instance of the class to which it belongs.

It should also be noted that the CIM is defined to facilitate data exchange. As defined in this document, CIM entities have no behavior. For a specific interface, a profile is defined

AVA Documents
Document Sharing Hub

Full document details: BS EN 61970-301:2017

consisting of subsets of CIM classes, attributes, and associations. A profile defines the message payload for an interface.

Classes have attributes that describe the characteristics of the objects. Each class in the CIM contains the attributes that describe and identify a specific instance of the class. Only the attributes that are of public interest to network applications are included in the class descriptions.

Each attribute has a type, which identifies what kind of attribute it is. Typical attributes are of type Integer, Float, Boolean, String, Date, and Decimal, which are called primitive types. However, many additional types are defined as part of the CIM specification. For example, ShuntCompensator has a "maxU" attribute of type Voltage. The definition of many shared types is contained in the Domain package. The UML stereotypes of Primitive, enumeration, CIMDatatype, and Compound are added to classes used as types. The CIMDatatype stereotype is used with a specific CIM semantics for a simple value with additional attributes describing the unit and multiplier of the value, e.g. unit, multiplier, denominatorUnit and denominatorMultiplier. This implies custom mapping to serialization artifacts such as RDFS, OWL, and XSD. Classes with these stereotypes do not participate in generalization or association relationships and are simply used as types for attributes. The enumeration stereotype is used to describe an attribute with an enumerated list of choices. The Compound stereotype is used to describe sets of related attributes that are commonly reused. Compound classes may consist of Primitive, enumeration, CIMDatatype or other Compound classes as long as the Compound classes do not recurse.

All CIM attributes are implicitly optional in the sense that profiles using the CIM may eliminate any attributes.

Relationships between classes reveal how they are structured in terms of each other. CIM classes are related in a variety of ways, as described in 4.4.2 to 4.4.4.

4.4.2 Generalization

A generalization is a relationship between a more general and a more specific class. The more specific class can contain only additional information. Generalization provides for the specific class to inherit attributes and relationships from all the more general classes above it.

Figure 3 is an example of generalization. In this example taken from the Wires package, a Breaker is a more specific type of ProtectedSwitch, which in turn is a more specific type of Switch, which is a more specific type of ConductingEquipment, etc. A PowerTransformer is another more specific type of ConductingEquipment. Note that PowerSystemResource inherits from class IdentifiedObject which is not on the diagram. Therefore, IdentifiedObject is shown in italic type in the upper right corner of class PowerSystemResource.

Documents
Document Sharing Hub

Full document details: BS EN 61970-301:2017

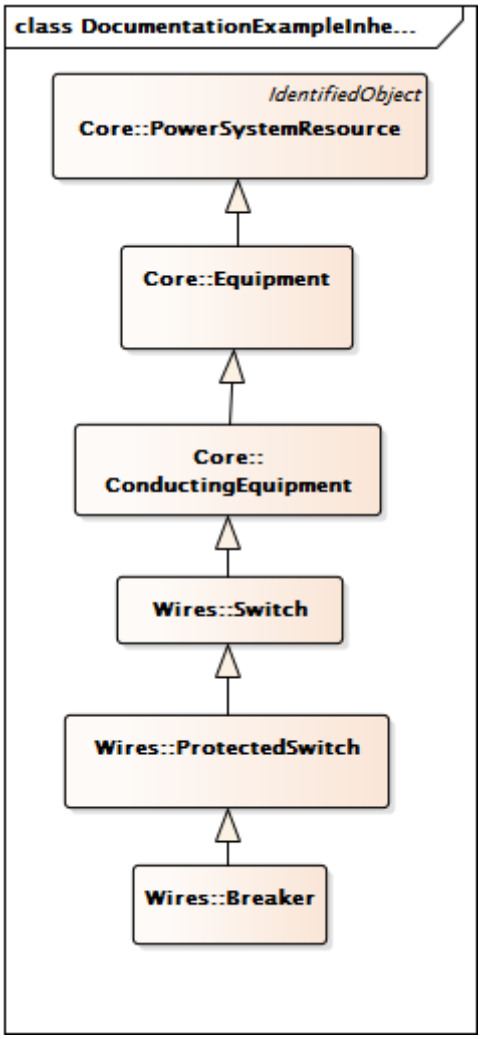

Figure 3 – Example of generalization

4.4.3 Simple association

An association is a conceptual connection between classes. Each association has two "association ends". The "association ends" were called "roles" prior to the UML 2.0 specification. Each association end describes the role the target class (i.e. the class the association end goes *to*) has in relation to the source class (i.e. the class the association end goes *from*). Association ends are usually given the name of the target class with or without a verb phrase. Each association end also has multiplicity/cardinality, which is an indication of how many objects may participate in the given relationship. In the CIM, associations are not named, only association ends are named. For example, as shown by Figure 4, in the CIM there is an association between a BaseVoltage and a VoltageLevel. Multiplicity is shown at both ends of the association. In this example, a VoltageLevel object may reference 1 BaseVoltage, and a BaseVoltage may be referenced by 0 or more VoltageLevel objects.

Documents
Document Sharing Hub
Full document details: BS EN 61970-301:2017

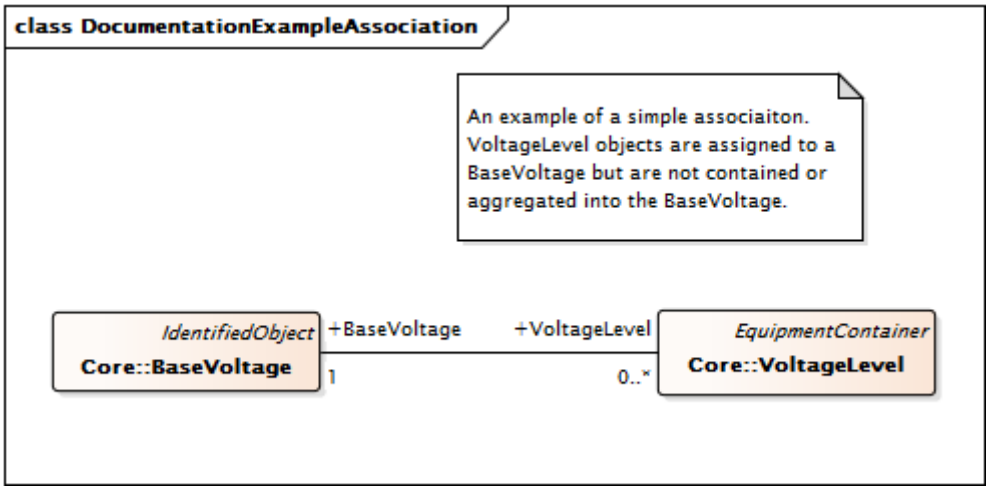

Figure 4 – Example of simple association

4.4.4 Aggregation

Aggregation is a special case of association. Aggregation indicates that the relationship between the classes is some sort of whole-part relationship, where the whole class “consists of” or “contains” the part class, and the part class is “part of” the whole class. The part class does not inherit from the whole class as in generalization. Figure 5 illustrates an aggregation between the EquipmentContainer class and the Equipment class, which is taken from the Core package. As shown, an Equipment can be a member of zero or one EquipmentContainer objects, but an EquipmentContainer object can contain any number of Equipment objects. In the context of using CIM as an information model, aggregation does not have a precise or formal interpretation beyond a simple association and is intended to visually assist in representing normal usage.

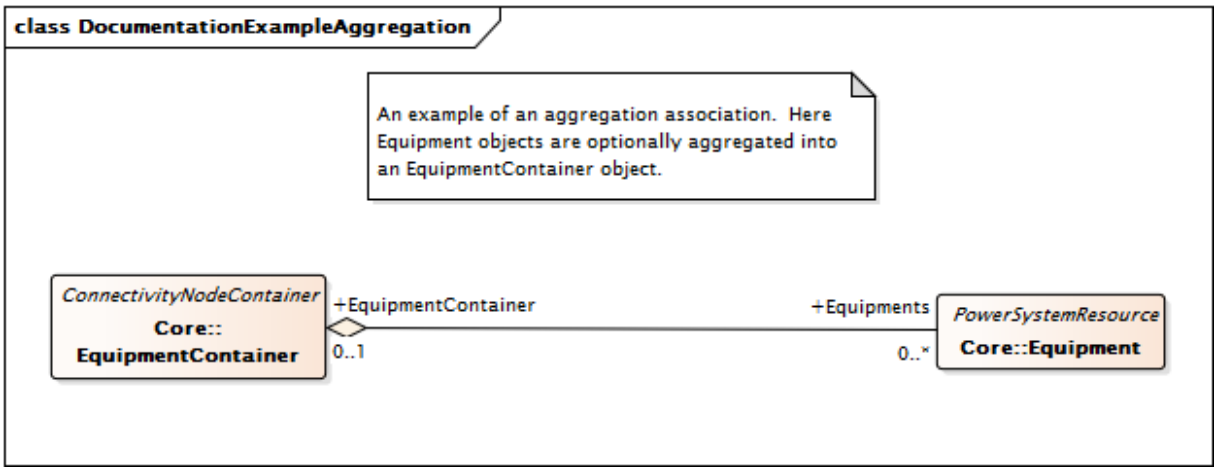

Figure 5 – Example of aggregation

4.5 CIM model concepts and examples

4.5.1 Concepts

To help understand how to interpret the CIM, some key model concepts used in the CIM are introduced and described in 4.5.2 to 4.5.14.

Documents
Document Sharing Hub

Full document details: BS EN 61970-301:2017

4.5.2 Containment, equipment hierarchies and naming

4.5.2.1 Containment structure

Figure 6 shows the concept of equipment containers to form hierarchies in the CIM. Equipment containers represent ways of organizing and naming equipment typically found within a substation. As may be seen, there is some flexibility provided in which containers are used in a specific application of the CIM in order to accommodate different international practices as well as differences typically found between transmission and distribution substations. Bay, VoltageLevel, Substation, Line, and Plant are all types of EquipmentContainers. In general, a Bay is contained within a specific VoltageLevel, which in turn is contained within a Substation. Substations and Lines may be contained within SubGeographicRegions and GeographicRegions.

One containment hierarchy is used with the IdentifiedObject class to create hierarchical naming intended for human consumption. This hierarchy is specifically used to name equipment according to its function in the power system. This is the functional naming hierarchy. Other common identifications beside functional names are asset serial numbers. The functional name is different from a serial number in that it relates to the function of a particular equipment position or location in the power system. Regardless of what specific piece of physical equipment is placed at a location, the functional name is the same but the serial number varies depending on the physical equipment currently used.

4.5.2.2 IdentifiedObject class

The IdentifiedObject class contained in the Core package is inherited by all PowerSystemResource and many other classes. This class has attributes and associations to be used for naming all CIM objects. The mRID attribute of the IdentifiedObject class provides a straight forward and rigorous means of identity for CIM objects.

The following are definitions and conventions for how to use the IdentifiedObject attributes when naming PowerSystemResource objects:

- mRID (Master Resource ID): A globally unique machine-readable identifier for an object instance.
- name: The name is any free human readable and possibly non unique text naming the object.
- aliasName: This attribute is an additional name but the Name classes of 4.5.3 provide a better alternative. The aliasName is free text human readable name of the object alternative to IdentifiedObject.name. It may be non unique and may not correlate to a naming hierarchy. The attribute aliasName is retained because of backwards compatibility between CIM releases. It is however recommended to replace aliasName with the Name class as aliasName is planned for retirement at a future time.

Documents
Document Sharing Hub

Full document details: BS EN 61970-301:2017

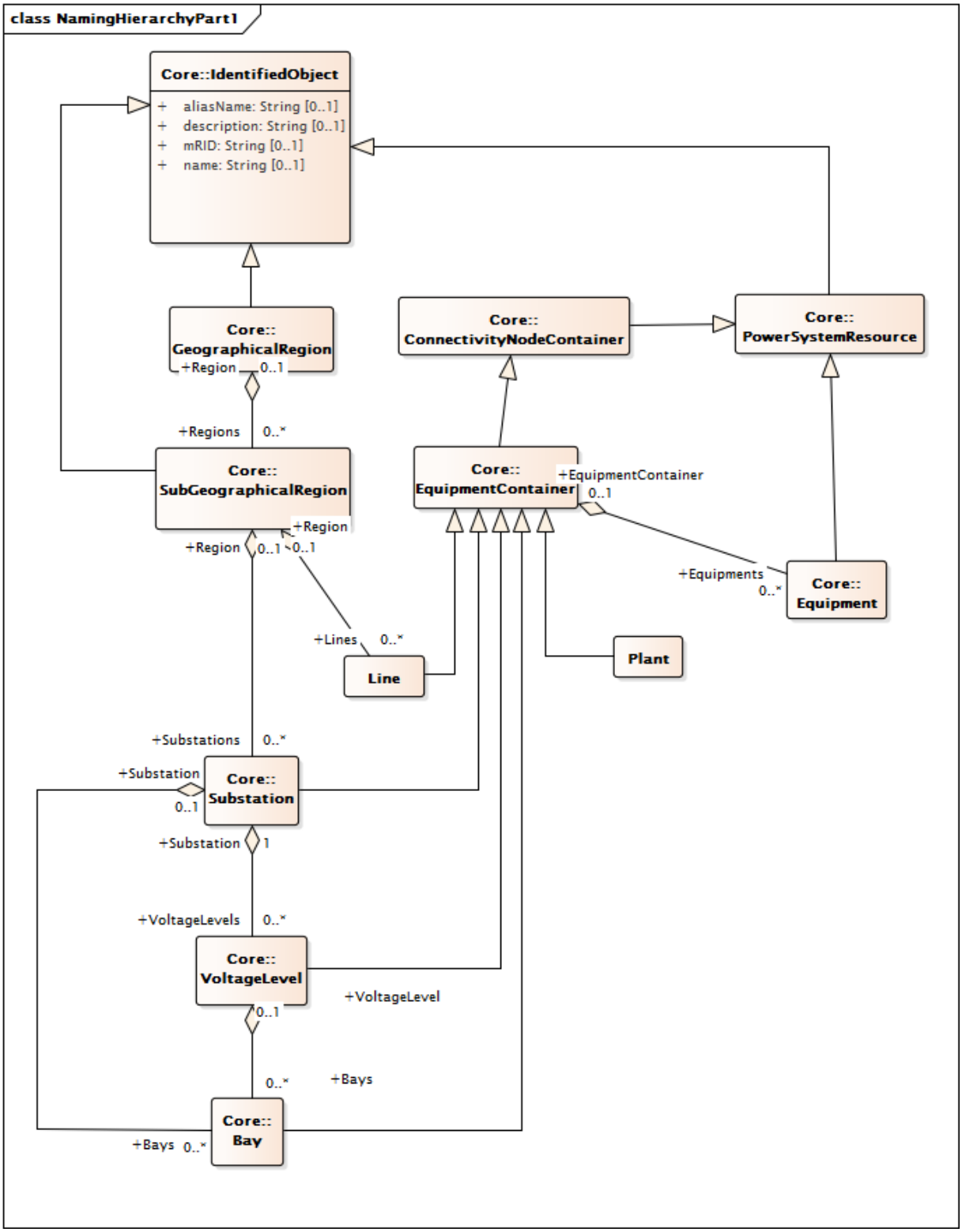

Figure 6 – Equipment containers

The diagrams NamingHierarchyPart1 and NamingHierarchyPart2 in the Wires package show the functional naming hierarchy.

4.5.3 Names model

A flexible and extensible naming model is provided to specify alternate names for objects. A use cases where the names model is useful is when multiple applications or systems have

AVA Documents
Document Sharing Hub

Full document details: BS EN 61970-301:2017

different names for the same object. The names model then enables exchange of these names.

Figure 7 shows the class diagram for alternate names and how they can be associated to a specific user defined name type. This model allows for specific definition of names within a particular domain and enforces no specific naming rules. The concepts of alias names, path names, and local names can all be accommodated by this model. The CIM models do not enforce or promote specific naming conventions, but allow for such naming conventions to be exchanged in a clear context.

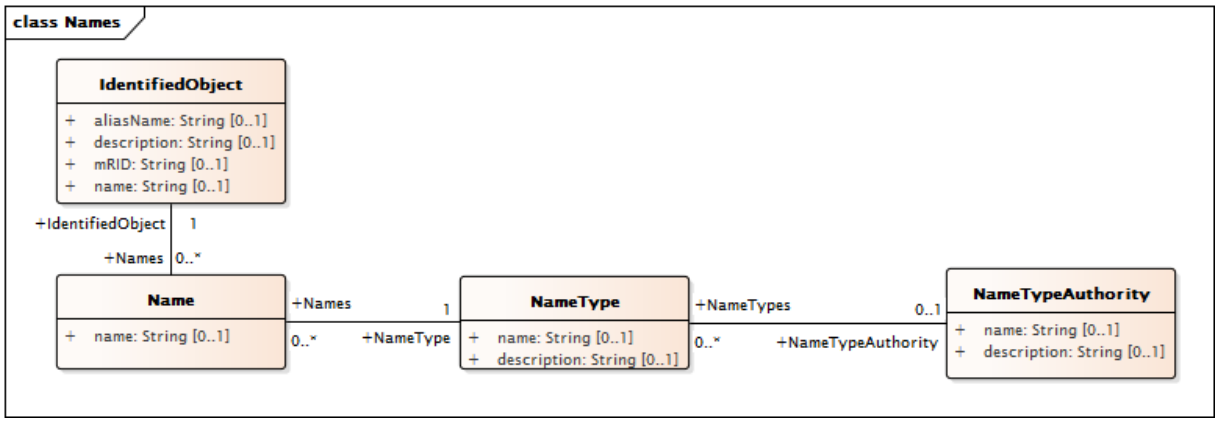

Figure 7 – Names

Table 1 – NameType class naming conventions

name	description
ICCP	Reserved for ICCP (TASE-2) names. Used to describe ICCP point names for the MeasurementValue class and ICCP source names for the MeasurementValueSource class.

Table 1 describes various name conventions for name types. The meanings of the columns in Table 1 are as follows:

name: The name attribute value.

description: The use of the name type.

Note that Table 1 is not an exhaustive list of values that can be used for the name attribute of the class Name.

4.5.4 Connectivity model

4.5.4.1 Connectivity description

Figure 8 shows the Topology class diagram which models connectivity between different types of ConductingEquipment. Also included is a portion of the Meas package class diagram dealing with measurements to illustrate how measurements are associated with conducting equipment.

Documents
Document Sharing Hub

Full document details: BS EN 61970-301:2017