BS EN 61987-11:2017

BSI Standards Publication

Industrial-process measurement and control — Data structures and elements in process equipment catalogues

Part 11: List of properties (LOPs) of measuring equipment for electronic data exchange — Generic structures

Documents
Document Sharing Hub

Full document details: BS EN 61987-11:2017

National foreword

This British Standard is the UK implementation of EN 61987-11:2017. It is identical to IEC 61987-11:2016. It supersedes BS EN 61987-11:2012 which is withdrawn.

The UK participation in its preparation was entrusted to Technical Committee AMT/7, Industrial communications: process measurement and control, including fieldbus.

A list of organizations represented on this committee can be obtained on request to its secretary.

This publication does not purport to include all the necessary provisions of a contract. Users are responsible for its correct application.

© The British Standards Institution 2017
Published by BSI Standards Limited 2017

ISBN 978 0 580 90060 0

ICS 25.040.40; 35.100.20

Compliance with a British Standard cannot confer immunity from legal obligations.

This British Standard was published under the authority of the Standards Policy and Strategy Committee on 31 July 2017.

Amendments/corrigenda issued since publication

Date	Text affected

Documents
Document Sharing Hub

Full document details: BS EN 61987-11:2017

EUROPEAN STANDARD

NORME EUROPÉENNE

EUROPÄISCHE NORM

EN 61987-11

April 2017

ICS 25.040.40; 35.100.20

Supersedes EN 61987-11:2012

English Version

Industrial-process measurement and control - Data structures and elements in -process equipment catalogues - Part 11: Lists of properties (LOPs) of measuring equipment for electronic data exchange - Generic structures (IEC 61987-11:2016)

Mesure et commande des processus industriels - Structures de données et éléments dans les catalogues d'équipement de processus - Partie 11: Listes des propriétés (LOP) d'équipements de mesure pour l'échange électronique de données - Structures génériques (IEC 61987-11:2016)

Industrielle Leittechnik - Datenstrukturen und -elemente in Katalogen der Prozessleittechnik - Teil 11: Merkmalleisten (ML) für Messgeräte für den elektronischen Datenaustausch - Allgemeine Strukturen (IEC 61987-11:2016)

This European Standard was approved by CENELEC on 2017-01-19. CENELEC members are bound to comply with the CEN/CENELEC Internal Regulations which stipulate the conditions for giving this European Standard the status of a national standard without any alteration.

Up-to-date lists and bibliographical references concerning such national standards may be obtained on application to the CEN-CENELEC Management Centre or to any CENELEC member.

This European Standard exists in three official versions (English, French, German). A version in any other language made by translation under the responsibility of a CENELEC member into its own language and notified to the CEN-CENELEC Management Centre has the same status as the official versions.

CENELEC members are the national electrotechnical committees of Austria, Belgium, Bulgaria, Croatia, Cyprus, the Czech Republic, Denmark, Estonia, Finland, Former Yugoslav Republic of Macedonia, France, Germany, Greece, Hungary, Iceland, Ireland, Italy, Latvia, Lithuania, Luxembourg, Malta, the Netherlands, Norway, Poland, Portugal, Romania, Serbia, Slovakia, Slovenia, Spain, Sweden, Switzerland, Turkey and the United Kingdom.

European Committee for Electrotechnical Standardization
Comité Européen de Normalisation Electrotechnique
Europäisches Komitee für Elektrotechnische Normung

CEN-CENELEC Management Centre: Avenue Marnix 17, B-1000 Brussels

© 2017 CENELEC All rights of exploitation in any form and by any means reserved worldwide for CENELEC Members.

Ref. No. EN 61987-11:2017 E

AVA Documents Document Sharing Hub

Full document details: BS EN 61987-11:2017

European foreword

The text of document 65E/467/CDV, future edition 2 of IEC 61987-11, prepared by SC 65E “Devices and integration in enterprise systems” of IEC/TC 65 “Industrial process measurement, control and automation" was submitted to the IEC-CENELEC parallel vote and approved by CENELEC as EN 61987-11:2017.

The following dates are fixed:

• latest date by which the document has to be implemented at national level by publication of an identical national standard or by endorsement	(dop)	2017-10-21
• latest date by which the national standards conflicting with the document have to be withdrawn	(dow)	2020-04-21

This document supersedes EN 61987-11:2012.

Attention is drawn to the possibility that some of the elements of this document may be the subject of patent rights. CENELEC [and/or CEN] shall not be held responsible for identifying any or all such patent rights.

Endorsement notice

The text of the International Standard IEC 61987-11:2016 was approved by CENELEC as a European Standard without any modification.

In the official version, for Bibliography, the following notes have to be added for the standards indicated:

IEC 60770-1:2010	NOTE	Harmonized as EN 60770-1:2011
IEC 61360-1:2009	NOTE	Harmonized as EN 61360-1:2010
IEC 61360-2	NOTE	Harmonized as EN 61360-2
IEC 61987-12	NOTE	Harmonized as EN 61987-12
IEC 81346-1:2009	NOTE	Harmonized as EN 81346-1:2009
ISO 10303 (Series)	NOTE	Harmonized as ENV 10303 (Series)

Documents
Document Sharing Hub

Full document details: BS EN 61987-11:2017

Annex ZA
(normative)
Normative references to international publications with their corresponding European publications

The following documents, in whole or in part, are normatively referenced in this document and are indispensable for its application. For dated references, only the edition cited applies. For undated references, the latest edition of the referenced document (including any amendments) applies.

NOTE 1 When an International Publication has been modified by common modifications, indicated by (mod), the relevant EN/HD applies.

NOTE 2 Up-to-date information on the latest versions of the European Standards listed in this annex is available here: www.cenelec.eu.

Publication	Year	Title	EN/HD	Year
IEC 60947-5-6	-	Low-voltage switchgear and controlgear -- Part 5-6: Control circuit devices and switching elements - DC interface for proximity sensors and switching amplifiers (NAMUR)	EN 60947-5-6	-
IEC 61069-5	-	Industrial-process measurement, control and automation - Evaluation of system properties for the purpose of system assessment - Part 5: Assessment of system dependability	EN 61069-5	-
IEC 61508-6	-	Functional safety of electrical/electronic/programmable electronic safety-related systems -- Part 6: Guidelines on the application of IEC 61508-2 and IEC 61508-3	EN 61508-6	-
IEC 61987-1	2006	Industrial-process measurement and control - Data structures and elements in process equipment catalogues -- Part 1: Measuring equipment with analogue and digital output	EN 61987-1	2007
IEC 61987-10	2009	Industrial-process measurement and control - Data structures and elements in process equipment catalogues - Part 10: Lists of Properties (LOPs) for Industrial-Process Measurement and Control for Electronic Data Exchange - Fundamentals	EN 61987-10	2009
-	-		+ AC	2011
IEC 61987-92	-		-	-
IEC 62424	-	Representation of process control engineering - Requests in P&I diagrams and data exchange between P&ID tools and PCE-CAE tools	EN 62424	-

Documents
Document Sharing Hub
Full document details: BS EN 61987-11:2017

This page deliberately left blank

Documents
Document Sharing Hub

Full document details: BS EN 61987-11:2017

CONTENTS

FOREWORD 5
INTRODUCTION 7
1 Scope 9
2 Normative references 9
3 Terms and definitions 10
3.1 Terms and definitions concerning measuring instruments 10
3.2 Terms and definitions concerning relationships 11
4 General 13
4.1 Characterization scheme 13
4.2 Aspects 13
4.3 Rules for the construction of LOPs with block structure 15
4.3.1 Block order 15
4.3.2 Position of cardinality properties 15
4.3.3 Naming of blocks created by cardinality 15
4.3.4 Characterizing property 15
4.3.5 Validity 15
4.4 OLOP and DLOP 15
4.5 Operating conditions 16
4.6 Measuring equipment configuration 17
5 Operating list of properties (OLOP) 18
5.1 Generic block structure 18
5.2 Base conditions 19
5.3 Process case 19
5.3.1 General 19
5.3.2 Process case variables 19
5.3.3 Other process case variable 20
5.4 Operating conditions for device design 20
5.4.1 General 20
5.4.2 Installation design conditions 20
5.4.3 Environmental design conditions 20
5.4.4 Process design conditions 21
5.4.5 Pressure-temperature design conditions 21
5.5 Process equipment 22
5.5.1 General 22
5.5.2 Line or nozzle 22
5.6 Physical location 22
5.6.1 General 22
5.6.2 Available power supply 22
5.6.3 Process criticality classification 23
5.6.4 Area classification 23
6 Device list of properties (DLOP) 23
6.1 General 23
6.1.1 Generic block structure 23
6.1.2 Relationship to IEC 61987-1 25
6.1.3 Multivariable devices 25
6.2 Identification 26

AVA Documents
Document Sharing Hub
Full document details: BS EN 61987-11:2017

6.3 Application ... 26
6.4 Function and system design ... 26
6.4.1 General ... 26
6.4.2 Dependability ... 26
6.5 Input ... 26
6.5.1 General ... 26
6.5.2 Measured variable ... 26
6.5.3 Auxiliary input ... 27
6.6 Output ... 28
6.6.1 General ... 28
6.6.2 <Signal> output ... 29
6.7 Digital communication ... 30
6.7.1 General ... 30
6.7.2 Digital communication interface ... 30
6.8 Performance ... 30
6.8.1 General ... 30
6.8.2 Reference conditions for the device ... 30
6.8.3 Performance variable ... 30
6.9 Rated operating conditions ... 32
6.9.1 General ... 32
6.9.2 Installation conditions ... 32
6.9.3 Environmental design ratings ... 33
6.9.4 Process design ratings ... 33
6.9.5 Pressure-temperature design ratings ... 34
6.10 Mechanical and electrical construction ... 34
6.10.1 General ... 34
6.10.2 Overall dimensions and weight ... 34
6.10.3 Structural design ... 35
6.10.4 Explosion protection design approval ... 35
6.10.5 Codes and standards approval ... 35
6.11 Operability ... 35
6.11.1 General ... 35
6.11.2 Basic configuration ... 35
6.11.3 Parametrization ... 35
6.11.4 Adjustment ... 35
6.11.5 Operation ... 35
6.11.6 Diagnosis ... 35
6.12 Power supply ... 36
6.13 Certificates and approvals ... 36
6.14 Component part identifications ... 36
7 Composite devices ... 36
7.1 Structure of composite devices ... 36
7.2 Aspects of components ... 38
8 Additional aspects ... 38
8.1 Administrative information ... 38
8.2 Calibration and test ... 39
8.3 Accessories ... 39
8.4 Device documents supplied ... 39
8.5 Packaging and shipping ... 39

AVA Documents
Document Sharing Hub

8.6 Digital communication parametrization 39
8.7 Example of a composite device with aspects 39
Annex A (informative) Device type dictionary – Classification of process measuring equipment according to measuring characteristics 41
Bibliography 60

Figure 1 – Characterisation of measuring equipment 13
Figure 2 – Simplified UML scheme of device, LOPs and aspects 14
Figure 3 – Assignment of OLOPs and DLOPs for equipment used to measure one type of measured variable 16
Figure 4 – Structure of a composite device 37
Figure 5 – Example for the structure of an LOP for a composite device showing different aspects related to different sub-components 40

Table 1 – Structure of the block “Operating conditions for device design” in the OLOP 17
Table 2 – Structure of the block “Rated operating conditions” in the DLOP 17
Table 3 – Generic block structure of an OLOP 18
Table 4 – Generic block structure of a DLOP 24
Table 5 – DLOP structure for composite devices 37
Table A.1 – Classification scheme for process measuring equipment 41

Documents
Document Sharing Hub

Full document details: BS EN 61987-11:2017

INTERNATIONAL ELECTROTECHNICAL COMMISSION

INDUSTRIAL-PROCESS MEASUREMENT AND CONTROL – DATA STRUCTURES AND ELEMENTS IN PROCESS EQUIPMENT CATALOGUES –

Part 11: Lists of properties (LOPs) of measuring equipment for electronic data exchange – Generic structures

FOREWORD

1) The International Electrotechnical Commission (IEC) is a worldwide organization for standardization comprising all national electrotechnical committees (IEC National Committees). The object of IEC is to promote international co-operation on all questions concerning standardization in the electrical and electronic fields. To this end and in addition to other activities, IEC publishes International Standards, Technical Specifications, Technical Reports, Publicly Available Specifications (PAS) and Guides (hereafter referred to as "IEC Publication(s)"). Their preparation is entrusted to technical committees; any IEC National Committee interested in the subject dealt with may participate in this preparatory work. International, governmental and non-governmental organizations liaising with the IEC also participate in this preparation. IEC collaborates closely with the International Organization for Standardization (ISO) in accordance with conditions determined by agreement between the two organizations.
2) The formal decisions or agreements of IEC on technical matters express, as nearly as possible, an international consensus of opinion on the relevant subjects since each technical committee has representation from all interested IEC National Committees.
3) IEC Publications have the form of recommendations for international use and are accepted by IEC National Committees in that sense. While all reasonable efforts are made to ensure that the technical content of IEC Publications is accurate, IEC cannot be held responsible for the way in which they are used or for any misinterpretation by any end user.
4) In order to promote international uniformity, IEC National Committees undertake to apply IEC Publications transparently to the maximum extent possible in their national and regional publications. Any divergence between any IEC Publication and the corresponding national or regional publication shall be clearly indicated in the latter.
5) IEC itself does not provide any attestation of conformity. Independent certification bodies provide conformity assessment services and, in some areas, access to IEC marks of conformity. IEC is not responsible for any services carried out by independent certification bodies.
6) All users should ensure that they have the latest edition of this publication.
7) No liability shall attach to IEC or its directors, employees, servants or agents including individual experts and members of its technical committees and IEC National Committees for any personal injury, property damage or other damage of any nature whatsoever, whether direct or indirect, or for costs (including legal fees) and expenses arising out of the publication, use of, or reliance upon, this IEC Publication or any other IEC Publications.
8) Attention is drawn to the Normative references cited in this publication. Use of the referenced publications is indispensable for the correct application of this publication.
9) Attention is drawn to the possibility that some of the elements of this IEC Publication may be the subject of patent rights. IEC shall not be held responsible for identifying any or all such patent rights.

International Standard IEC 61987-11 has been prepared by subcommittee 65E: Devices and integration in enterprise systems, of IEC technical committee 65: Industrial-process measurement, control and automation.

This second edition cancels and replaces the first edition published in 2012. This edition constitutes a technical revision.

This edition includes the following significant technical changes with respect to the previous edition:

a) The classification in Table A.1 has been amended to reflect the changes in the classification scheme of process measuring equipment in the CDD due to the development of IEC 61987-14, IEC 61987-15 and IEC 61987-16.
b) Annex A has become "informative".

Documents
Document Sharing Hub

The text of this standard is based on the following documents:

CDV	Report on voting
65E/467/CDV	65E/509/RVC

Full information on the voting for the approval of this standard can be found in the report on voting indicated in the above table.

This publication has been drafted in accordance with the ISO/IEC Directives, Part 2.

A list of all parts in the IEC 61987 series, published under the general title *Industrial-process measurement and control – Data structures and elements in process equipment catalogues*, can be found on the IEC website.

The committee has decided that the contents of this publication will remain unchanged until the stability date indicated on the IEC website under "http://webstore.iec.ch" in the data related to the specific publication. At this date, the publication will be

- reconfirmed,
- withdrawn,
- replaced by a revised edition, or
- amended.

IMPORTANT – The 'colour inside' logo on the cover page of this publication indicates that it contains colours which are considered to be useful for the correct understanding of its contents. Users should therefore print this document using a colour printer.

Documents
Document Sharing Hub

Full document details: BS EN 61987-11:2017

INTRODUCTION

The exchange of product data between companies, business systems, engineering tools, data systems within companies and, in the future, control systems (electrical, measuring and control technology) can run smoothly only when both the information to be exchanged and the use of this information has been clearly defined.

Prior to this document, requirements on process control devices and systems were specified by customers in various ways when suppliers or manufacturers were asked to quote for suitable equipment. The suppliers in their turn described the devices according to their own documentation schemes, often using different terms, structures and media (paper, databases, CDs, e-catalogues, etc.). The situation was similar in the planning and development process, with device information frequently being duplicated in a number of different information technology (IT) systems.

Any method that is capable of recording all existing information only once during the planning and ordering process and making it available for further processing, gives all parties involved an opportunity to concentrate on the essentials. A precondition for this is the standardization of both the descriptions of the objects and the exchange of information.

This standard series proposes a method for standardization which will help both suppliers and users of measuring equipment to optimize workflows both within their own companies and in their exchanges with other companies. Depending on their role in the process, engineering firms may be considered here to be either users or suppliers.

The method specifies measuring equipment by means of blocks of properties. These blocks are compiled into lists of properties (LOPs), each of which describes a specific equipment (device) type. This standard series covers both properties that may be used in an inquiry or a proposal and detailed properties required for integration of the equipment in computer systems for other tasks.

IEC 61987-10 defines structure elements for constructing lists of properties for electrical and process control equipment in order to facilitate automatic data exchange between any two computer systems in any possible workflow, for example engineering, maintenance or purchasing workflow and to allow both the customers and the suppliers of the equipment to optimize their processes and workflows. IEC 61987-10 also provides the data model for assembling the LOPs.

IEC 61987-11 specifies the generic structure for operating and device lists of properties (OLOPs and DLOPs). It lays down the framework for further parts of IEC 61987 in which complete LOPs for device types measuring a given physical variable and using a particular measuring principle will be specified. The generic structure may also serve as a basis for the specification of LOPs for other industrial-process control instrument types such as control valves and signal processing equipment.

Content of the lists of properties (LOPs)

The LOPs specified in this document describe at generic level:

- the operating conditions of the measuring equipment;
- the ambient conditions at the measuring point;
- the performance of the measuring equipment;
- the metrological, mechanical and electrical features of the measuring equipment;
- the compliance of the measuring instrument to specific industrial requirements.

The LOPs mirror constructive reality but do not represent an instrument model.

Documents
Document Sharing Hub

Full document details: BS EN 61987-11:2017

Measuring equipment configuration

The generic LOPs have been so constructed that they take account of integral equipment and separately mounted equipment.

Device type dictionary

Annex A describes a characterisation of measuring equipment based on the STEP library, ISO 10303. This is a tree of relationships between different device types. Starting at the root "equipment for industrial-process automation", it first characterizes measuring equipment according to type, then according to process variable measured and finally according to the measuring method employed. This structure will be used in the IEC Common Data Dictionary (CDD) "Process automation (IEC 61987 series)" domain.

For the purpose of this document, the following types of measuring equipment have been identified, see Clause 3 for definitions:

- sight indicator (with direct indicating qualitative output),
- gauge (with quantitative output only in the form of a direct indicating display),
- transmitter (with quantitative analogue output or corresponding digital output signal),
- switch (with discrete output or corresponding digital output signal),
- measuring assembly (as a grouping of instrument components, which together form a gauge, transmitter or switch).

It should be noted that in the real world, there is not such a clear demarcation between types of measuring equipment. In commercial literature, indicators are often called gauges, although the products offer no quantitative measurement. Similarly, direct indicating displays are often equipped with electrical trip switches which allow a gauge to act as a switch. Finally "transmitter" is by no means a universal term and in particular for flow measurement many manufacturers call this kind of equipment "meter".

Composite devices

A structural scheme is given, defining how to build up LOPs for devices consisting of several components or assembled from different parts, that is, composite devices and measuring assemblies.

Documents
Document Sharing Hub

Full document details: BS EN 61987-11:2017

INDUSTRIAL-PROCESS MEASUREMENT AND CONTROL – DATA STRUCTURES AND ELEMENTS IN PROCESS EQUIPMENT CATALOGUES –

Part 11: Lists of properties (LOPs) of measuring equipment for electronic data exchange – Generic structures

1 Scope

This part of IEC 61987 provides:

- a characterisation of industrial process measuring equipment (device type dictionary) for integration in the Common Data Dictionary (CDD), and
- generic structures for operating lists of properties (OLOP) and device lists of properties (DLOP) of measuring equipment in conformance with IEC 61987-10.

The generic structures for the OLOP and DLOP contain the most important blocks for process measuring equipment. Blocks pertaining to a specific equipment type will be described in the corresponding part of the IEC 61987 standard series. Similarly, equipment properties are not part of IEC 61987-11. For instance, the OLOP and DLOP for flow transmitters with blocks and properties are to be found in IEC 61987-12.

2 Normative references

The following documents are referred to in the text in such a way that some or all of their content constitutes requirements of this document. For dated references, only the edition cited applies. For undated references, the latest edition of the referenced document (including any amendments) applies.

IEC 60947-5-6, *Low-voltage switchgear and controlgear – Part 5-6: Control circuit devices and switching elements – DC interface for proximity sensors and switching amplifiers (NAMUR)*

IEC 61069-5, *Industrial-process measurement, control and automation – Evaluation of system properties for the purpose of system assessment – Part 5: Assessment of system dependability*

IEC 61508-6, *Functional safety of electrical/electronic/programmable electronic safety-related systems – Part 6: Guidelines on the application of IEC 61508-2 and IEC 61508-3*

IEC 61987-1:2006, *Industrial-process measurement and control – Data structures and elements in process equipment catalogues – Part 1: Measuring equipment with analogue and digital output*

IEC 61987-10:2009, *Industrial-process measurement and control – Data structures and elements in process equipment catalogues – Part 10: Lists of Properties (LOPs) for Industrial-Process Measurement and Control for Electronic Data Exchange – Fundamentals*

Documents
Document Sharing Hub

Full document details: BS EN 61987-11:2017

IEC 61987-92, *Industrial-process measurement and control – Data structures and elements in process equipment catalogues – Part 92: Lists of properties (LOPs) of measuring equipment for electronic data exchange – aspect LOPs*[1]

IEC 62424, *Representation of process control engineering – Requests in P&I diagrams and data exchange between P&ID tools and PCE-CAE tools*

3 Terms and definitions

For the purposes of this document, the following terms and definitions apply.

ISO and IEC maintain terminological databases for use in standardization at the following addresses:

- IEC Electropedia: available at http://www.electropedia.org/
- ISO Online browsing platform: available at http://www.iso.org/obp

3.1 Terms and definitions concerning measuring instruments

3.1.1
composite device with main component
device composed of various devices, whereby one is designated the main component

EXAMPLE A control valve which consists of the valve itself (main component), an actuator and a positioner.

Note 1 to entry: These devices might be supplied as a whole or the parts comprising the assembly of the composite device might be supplied individually.

3.1.2
gauge
measuring instrument intended to measure and indicate directly a measured value without auxiliary energy supply

Note 1 to entry: In process engineering a gauge is often called an indicator.

Note 2 to entry: A gauge equipped with electrical contacts in order to transmit one or more measured values to external equipment is still considered to be a gauge within the scope of this document.

3.1.3
instrument component
entity within a measuring instrument that plays a specific role and which can be handled separately if necessary

EXAMPLE Thermowell within a temperature assembly, remote seal for a pressure transmitter.

3.1.4
integral transmitter
transmitter mounted as an integral part of an assembly containing the sensing element

3.1.5
measuring assembly
measuring instrument comprising several required and/or optional components which together function as a gauge, transmitter or switch

Note 1 to entry: The components can often be ordered separately and as such require their own DLOPs.

Note 2 to entry: A measuring assembly may also be called a composite device.

[1] To be published.

Documents
Document Sharing Hub
Full document details: BS EN 61987-11:2017

3.1.6
measuring instrument
automation equipment that detects an aspect of a material in order to record, transform or display such an aspect or to perform a combination of these activities

3.1.7
PCE identifier/tag name
identifier assigned by the user to uniquely define the instrument or a component thereof

Note 1 to entry: PCE : Process Control Engineering.

3.1.8
sensing element
instrument component that is the primary element of a measuring chain and which may convert the input variable into a signal suitable for use by other instruments in that chain

Note 1 to entry: It is intended to respond to a physical stimulus and to produce a corresponding resulting signal.

3.1.9
separate transmitter
transmitter mounted at a location removed (locally or remotely) from an assembly containing the sensing element but connected to it by signal line

Note 1 to entry: A head-mounted transmitter is a separate transmitter mounted in a connection head.

3.1.10
sight indicator
measuring instrument that provides a means of visually inspecting a process regime and provides only a qualitative indication

Note 1 to entry: IEC 60770-1 defines “indicator” as an instrument intended to visually indicate a physical quantity.

3.1.11
switch
measuring instrument that provides a discrete output signal representative of a process regime

3.1.12
transmitter
instrument intended to transmit a standardized signal that represents the measured variable, which may or may not include an integral sensing element

Note 1 to entry: A transmitter may also be equipped with the means to indicate a measured value.

Note 2 to entry: In process engineering a transmitter is often called a meter, for example flowmeter.

Note 3 to entry: A transmitter may also be a component of a composite device or measuring assembly.

3.2 Terms and definitions concerning relationships

3.2.1
aspect
specified way of viewing an object

EXAMPLE Such a way may be

– information about how to describe an object (device) – the describing aspect,
– information about the surrounding conditions in which a device operates – the operating aspect.

[SOURCE: IEC 81346-1:2009, 3.3]

Documents
Document Sharing Hub

Full document details: BS EN 61987-11:2017

3.2.2
classification
non-transitive relationship indicating that the classified item is a member of the classifier class

EXAMPLE 1 The relationship that indicates that ‘London’ is a member of the class known as 'capital city' is known as “classification”.

EXAMPLE 2 'pump' **is_classified_as** 'equipment type'.

Note 1 to entry: A subtype of relationship is transitive if when A is related to B, and B is related to C in the same way, then A is necessarily related to C in that way. “specialization” and “composition” are examples of transitive subtypes of relationship. However, because classification is not transitive does not mean that A cannot be related to C in the same way, only that it does not necessarily follow from A being related to B and B being related to C.

Note 2 to entry: In this document the classification relationship is denoted as: **is_classified_as**.

[SOURCE: ISO 15926-2:2003, 5.2.2.3, modified – definition written according to IEC guidelines; ‘thing’ replaced by ‘item’ for consistency reasons]

3.2.3
has_part
time-dependent transitive, reflexive, anti-symmetric relation identifying that an item has another item as its part

EXAMPLE centrifugal pump **has_part** impeller during mounting.

Note 1 to entry: has_part is the inverse relation to is_part_of.

3.2.4
is_aspect_of
time-independent, anti-symmetric relation identifying that the LOP model of an aspect of a device and the LOP model of the device are in relationship to each other, reflecting the relationship between the device and its aspects

EXAMPLE The OLOP of a gauge **is_aspect_of** the DLOP of the gauge.

Note 1 to entry: IEC 61987-10 defines aspect as a specific way of selecting information on or describing a system or an object of a system.

3.2.5
is_part_of
time-dependent transitive, reflexive, anti-symmetric relation identifying that an item is part of another item

EXAMPLE impeller **is_part_of** centrifugal pump during mounting.

Note 1 to entry: C is_part_of C' if and only if: given any c that instantiates C at a time t, there is some c' such that c' instantiates C' at time t, and c is_part_of c' at t.

Note 2 to entry: is_part_of is time-dependent. An item may be part of another item but will be disconnected later during repair. In contrast the specialization and classification relation are time independent.

Note 3 to entry: The is_part_of relation may be used on level of devices and on level of individual components. However, only the device level is in the scope of this document, since the standard does not deal with individuals.

3.2.6
specialization
transitive, anti-symmetric relation indicating that all knowledge provided for the generic item is mandatory valid for the specialized item

EXAMPLE ‘Centrifugal pump’ **is_a** ‘pump’. All knowledge provided for ‘pump’ is mandatory valid for ‘centrifugal pump’. If an individual is denoted as ‘centrifugal pump’, it is consequently also a ‘pump’ and all properties and other information provided for ‘pump’ apply.

Note 1 to entry: If A is a specialization of B and B is a specialization of C, then A is necessarily a specialization of C.

AVA Documents
Document Sharing Hub

Full document details: BS EN 61987-11:2017

Note 2 to entry: In IEC 61987-11, the classification relationship is denoted as: is_a.

Note 3 to entry: If the generic item is a LOP then C is_a C' if and only if: given any c that instantiates C, c instantiates C'.

4 General

4.1 Characterization scheme

IEC 61987-1 describes a general classification scheme for industrial process measuring equipment based on measured variables. Industrial process measuring equipment may be further subdivided into sight indicators, gauges, transmitters, switches and measuring assemblies, see Introduction and definitions in Clause 3. Figure 1 explains schematically how the characterisation has been created. The entire characterisation is provided in Table A.1.

It should be noted that in creating the LOPs for a device, an instrument component may be part of a sight indicator, gauge, transmitter or switch or alternatively, a sight indicator, gauge, transmitter or switch may be part of a measuring assembly or composite device (see 7.1). For clarity this is not shown in Figure 1.

The enhanced characterization scheme is used for the IEC Common Data Dictionary (CDD). The area of measuring instruments belongs to the domain of “Process automation (IEC 61987 series)” in the CDD.

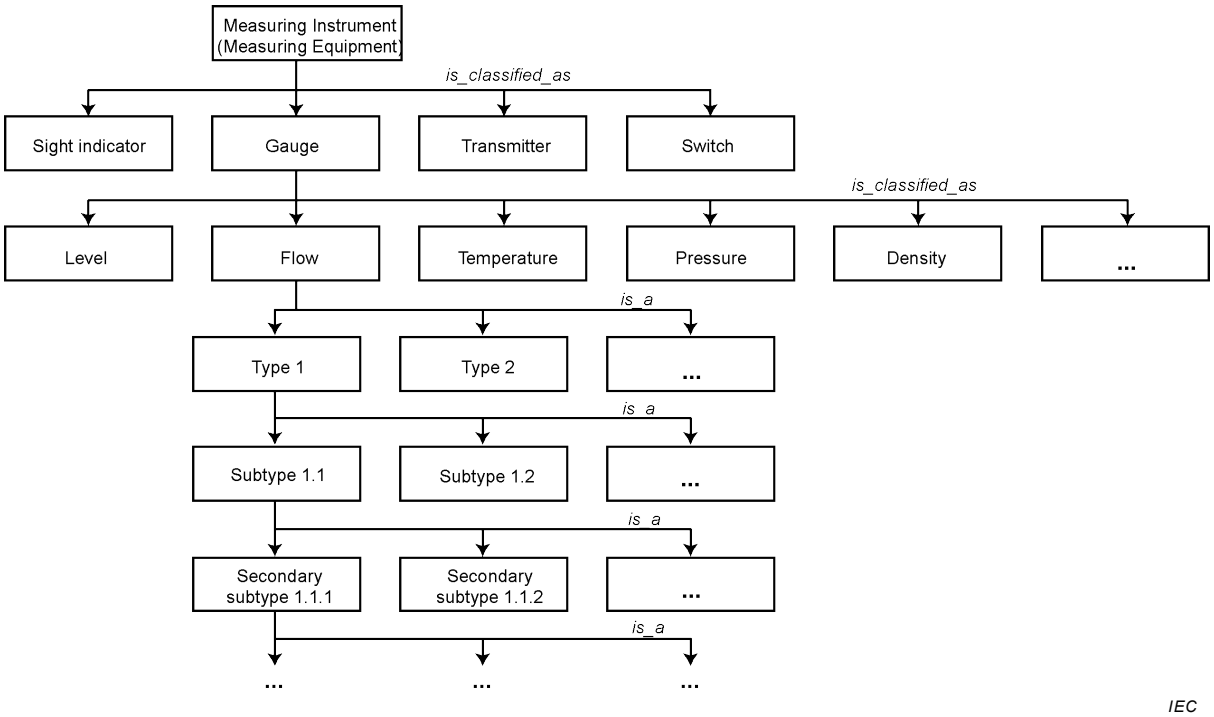

Figure 1 – Characterisation of measuring equipment

4.2 Aspects

In addition to properties describing the characterization of the device itself in the Device List of Properties (DLOP) a device has several different aspects describing all other issues related to it. Thus, for example, from the operating point of view, an operating list of properties (OLOP) and a device list of properties are linked.

Clause A.1 of IEC 61987-10:2009 describes a model which uses reference properties to express the relationships between the various aspects of a device. This entails the embedding of these properties in both the OLOP and DLOP. An alternative model which conforms to but

Documents
Document Sharing Hub
Full document details: BS EN 61987-11:2017

enhances that in Clause A.1 of IEC 61987-10:2009, removes the reference properties from the OLOP and DLOP as shown in Figure 2. These are now only required for describing the blocks and for building composite devices.

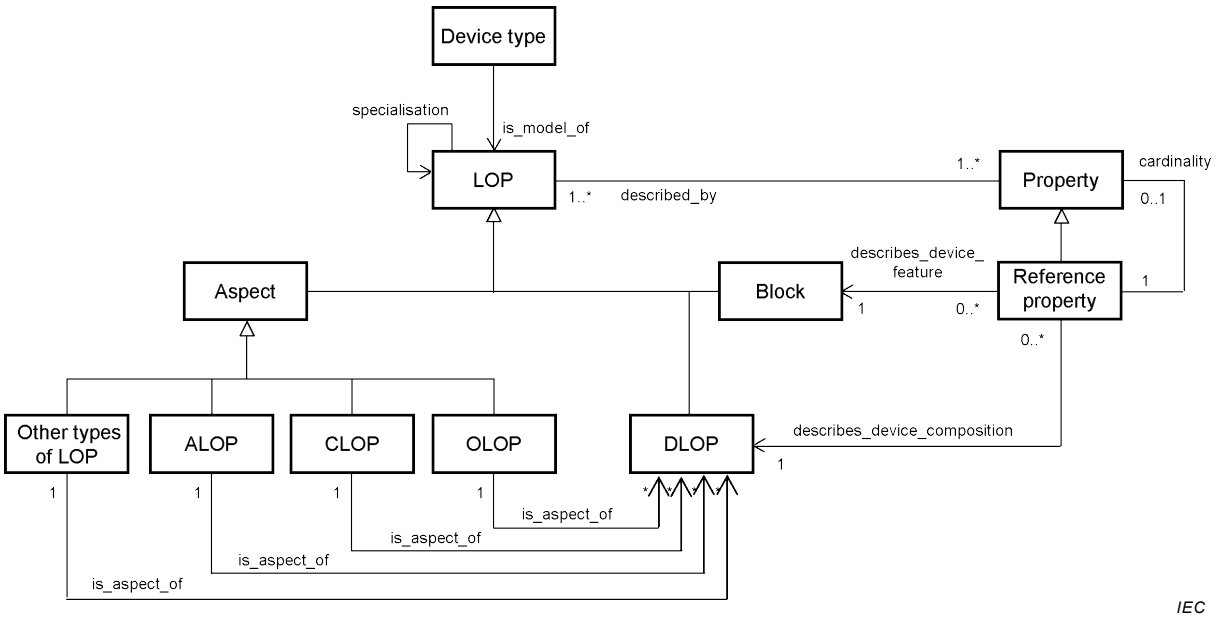

Figure 2 – Simplified UML scheme of device, LOPs and aspects

According to Figure 2, a device which belongs to a device type exists physically. The DLOP provides a model of the device type, comprising blocks and properties, which represent the device for electronic data exchange. The OLOP is an aspect of the device type which describes the operating conditions under which it shall or will operate. Since the DLOP represents a concrete device, the OLOP is related to the DLOP by the “is_aspect_of” relationship. The administrative LOP, the ALOP, contains the reference properties for the both transaction and project, and provides the link between the DLOP and OLOP. Other aspects of the DLOP are for example, LOPs for calibration and test, packaging, documentation etc., see Clause 8.

The use of aspects according to Figure 2 is advantageous, since it greatly simplifies the data model when a device is composed of several components. In this case, the various aspects can be used when needed and are not built-in to the LOPs as redundant properties. Furthermore, the model can be extended by further aspects when they are required, e.g. for intra-company use.

NOTE 1 In the context of this document it is assumed that the DLOP and aspects of the same device type are handled together within a single set of transaction data.

NOTE 2 A transaction may be started by the transmission of the OLOP without the DLOP or vice versa together with an ALOP, the other LOPs being added when required as the transaction proceeds.

NOTE 3 A list of aspects can be found in Clause 8. Depending on the type of device and functions it supports, other aspects may be required that are currently not included in this document.

Summing up, the following can be stated:

- The DLOP is the essential part of a complete LOP concerning a device type.
- Different aspects of a device type can be represented by corresponding LOP types.
- The combination of the DLOP with different aspects of a device type can be realized in two ways:
  a) the connection of different LOP types for generation of a whole LOP using reference properties as described in IEC 61987-10 or

AVA Documents
Document Sharing Hub

b) the connection of the DLOP with the required aspects of a device type using relationships as introduced in IEC 61987-11.

Approach a) can be used where fixed structures combining LOP types, for example an ALOP, an OLOP and a DLOP, are needed. Approach b) is recommended in cases where the description of reality by LOPs needs to be flexible.

4.3 Rules for the construction of LOPs with block structure

4.3.1 Block order

The order of blocks in a LOP as well as the order of sub-blocks and properties in a block shall be fixed for depictions of the same LOP.

This means that the order given by the standard may not be altered. Practical experience has shown that when working with LOPs comprising hundreds of lines (blocks and properties), only this approach can guarantee that the contents of each block can be recognized.

The generic block structure of an Operating LOP given in Table 3 in 5.1 defines the block order in an OLOP for measuring equipment.

The first structural level of a Device LOP for measuring equipment is defined in Clause 4 of IEC 61987-1:2006, with the amendments described in 6.1.2 of this standard. Table 4 in 6.1.1 defines the generic block structure for a DLOP and includes additional levels.

4.3.2 Position of cardinality properties

In the representation of the structural data, the cardinality property, which determines how many times a block should be repeated in the transaction file, shall be placed directly before the block.

NOTE Cardinality properties in the CDD can be recognized by the prefix “Number of <block name>” and are placed directly before the block with the <block name>.

4.3.3 Naming of blocks created by cardinality

Where a block is repeated in a LOP by using cardinality, the block name shall receive a suffix comprising an underscore and an index indicative of the repeat.

EXAMPLE If the block "Signal function" is to be repeated twice, the two corresponding blocks in the transaction file shall be given the names "Signal function_1" and "Signal function_2".

4.3.4 Characterizing property

Should the name of a block created by cardinality not unambiguously identify its purpose, then the first property in the block shall characterize it.

EXAMPLE In the block "Signal function", the property that characterizes the blocks after they have been repeated is "Purpose of signal". This property can have, for example, the values "limit detection", "empty pipe detection" etc.

NOTE IEC 61987-12 contains further examples.

4.3.5 Validity

The rules concern the presentation of the LOPs in the domain "Process automation (IEC 61987 series)" of the CDD and all types of data export from said domain.

4.4 OLOP and DLOP

An operating list of properties contains aspects relating to the operational environment of the device, device design requirements as well as all boundary conditions applicable to the point

AVA Documents
Document Sharing Hub
Full document details: BS EN 61987-11:2017