BS EN 62439-3:2010

Industrial communication networks — High availability automation networks

Part 3: Parallel Redundancy Protocol (PRP) and High availability Seamless Redundancy (HSR)

Documents
Document Sharing Hub

National foreword

This British Standard is the UK implementation of EN 62439-3:2010. It is identical to IEC 62439-3:2010. Together with BS EN 62439-1:2010, BS EN 62439-2:2010, BS EN 62439-4:2010, BS EN 62439-5:2010 and BS EN 62439-6:2010, it supersedes BS EN 62439:2008 which is withdrawn.

The UK participation in its preparation was entrusted to Technical Committee AMT/7, Industrial communications: process measurement and control, including fieldbus.

A list of organizations represented on this committee can be obtained on request to its secretary.

This publication does not purport to include all the necessary provisions of a contract. Users are responsible for its correct application.

© BSI 2010

ISBN 978 0 580 70827 5

ICS 25.040.40; 35.040; 35.110

Compliance with a British Standard cannot confer immunity from legal obligations.

This British Standard was published under the authority of the Standards Policy and Strategy Committee on 30 June 2010.

Amendments issued since publication

Amd. No.	Date	Text affected

Documents
Document Sharing Hub

Full document details: BS EN 62439-3:2010

EUROPEAN STANDARD

NORME EUROPÉENNE

EUROPÄISCHE NORM

EN 62439-3

March 2010

ICS 25.040; 35.040

Supersedes EN 62439:2008 (partially)

English version

Industrial communication networks - High availability automation networks - Part 3: Parallel Redundancy Protocol (PRP) and High availability Seamless Redundancy (HSR)

(IEC 62439-3:2010)

Réseaux de communication industrielle - Réseaux d'automatisme à haute disponibilité - Partie 3 : Protocole de redondance parallèle (PRP) et redondance transparente de haute disponibilité (HSR) (CEI 62439-3:2010)

Industrielle Kommunikationsnetze: Hochverfügbare Automatisierungsnetze - Teil 3: Parallelredundanz-Protokoll (PRP) und nahtloser Hochverfügbarkeits-Ring (HSR) (IEC 62439-3:2010)

This European Standard was approved by CENELEC on 2010-03-01. CENELEC members are bound to comply with the CEN/CENELEC Internal Regulations which stipulate the conditions for giving this European Standard the status of a national standard without any alteration.

Up-to-date lists and bibliographical references concerning such national standards may be obtained on application to the Central Secretariat or to any CENELEC member.

This European Standard exists in three official versions (English, French, German). A version in any other language made by translation under the responsibility of a CENELEC member into its own language and notified to the Central Secretariat has the same status as the official versions.

CENELEC members are the national electrotechnical committees of Austria, Belgium, Bulgaria, Croatia, Cyprus, the Czech Republic, Denmark, Estonia, Finland, France, Germany, Greece, Hungary, Iceland, Ireland, Italy, Latvia, Lithuania, Luxembourg, Malta, the Netherlands, Norway, Poland, Portugal, Romania, Slovakia, Slovenia, Spain, Sweden, Switzerland and the United Kingdom.

CENELEC

European Committee for Electrotechnical Standardization
Comité Européen de Normalisation Electrotechnique
Europäisches Komitee für Elektrotechnische Normung

Central Secretariat: Avenue Marnix 17, B - 1000 Brussels

© 2010 CENELEC - All rights of exploitation in any form and by any means reserved worldwide for CENELEC members.

Ref. No. EN 62439-3:2010 E

Documents
Document Sharing Hub

Full document details: BS EN 62439-3:2010

Foreword

The text of document 65C/583/FDIS, future edition 1 of IEC 62439-3, prepared by SC 65C, Industrial networks, of IEC TC 65, Industrial-process measurement, control and automation, was submitted to the IEC-CENELEC parallel vote and was approved by CENELEC as EN 62439-3 on 2010-03-01.

This EN 62439-3 together with EN 62439-1, EN 62439-2, EN 62439-4, EN 62439-5 and EN 62439-6 supersedes EN 62439:2008.

EN 62439-3:2010 includes the following significant technical changes with respect to EN 62439:2008:

– adding a calculation method for RSTP (rapid spanning tree protocol, IEEE 802.1Q),

– adding two new redundancy protocols: HSR (High-availability Seamless Redundancy) and DRP (Distributed Redundancy Protocol),

– moving former Clauses 1 to 4 (introduction, definitions, general aspects) and the Annexes (taxonomy, availability calculation) to EN 62439-1, which serves now as a base for the other documents,

– moving Clause 5 (MRP) to EN 62439-2 with minor editorial changes,

– moving Clause 6 (PRP) was to EN 62439-3 with minor editorial changes,

– moving Clause 7 (CRP) was to EN 62439-4 with minor editorial changes, and

– moving Clause 8 (BRP) was to EN 62439-5 with minor editorial changes,

– adding a method to calculate the maximum recovery time of RSTP in a restricted configuration (ring) to EN 62439-1 as Clause 8,

– adding specifications of the HSR (High-availability Seamless Redundancy) protocol, which shares the principles of PRP to EN 62439-3 as Clause 5, and

– introducing the DRP protocol as EN 62439-6.

Attention is drawn to the possibility that some of the elements of this document may be the subject of patent rights. CEN and CENELEC shall not be held responsible for identifying any or all such patent rights.

The following dates were fixed:

– latest date by which the EN has to be implemented at national level by publication of an identical national standard or by endorsement	(dop)	2010-12-01
– latest date by which the national standards conflicting with the EN have to be withdrawn	(dow)	2013-03-01

Annex ZA has been added by CENELEC.

Documents
Document Sharing Hub
Full document details: BS EN 62439-3:2010

Endorsement notice

The text of the International Standard IEC 62439-3:2010 was approved by CENELEC as a European Standard without any modification.

In the official version, for Bibliography, the following notes have to be added for the standards indicated:

IEC 62439 series	NOTE	Harmonized in EN 62439 series (not modified).
IEC 62439-2	NOTE	Harmonized as EN 62439-2.
IEC 62439-4	NOTE	Harmonized as EN 62439-4.
IEC 62439-5	NOTE	Harmonized as EN 62439-5.
IEC 62439-6	NOTE	Harmonized as EN 62439-6.

Documents
Document Sharing Hub
Full document details: BS EN 62439-3:2010

Annex ZA
(normative)

Normative references to international publications with their corresponding European publications

The following referenced documents are indispensable for the application of this document. For dated references, only the edition cited applies. For undated references, the latest edition of the referenced document (including any amendments) applies.

NOTE When an international publication has been modified by common modifications, indicated by (mod), the relevant EN/HD applies.

Publication	Year	Title	EN/HD	Year
IEC 60050-191	1990	International Electrotechnical Vocabulary (IEV) - Chapter 191: Dependability and quality of service	-	-
IEC 62439-1	2010	Industrial communication networks - High availability automation networks - Part 1: General concepts and calculation methods	EN 62439-1	2010
ISO/IEC 8802-3	2000	Information technology - Telecommunications and information exchange between systems - Local and metropolitan area networks - Specific requirements - Part 3: Carrier sense multiple access with collision detection (CSMA/CD) access method and physical layer specifications	-	-
IEEE 802.1D	2004	IEEE Standard for Local and Metropoitan Area Networks - Media Access Control (MAC) Bridges	-	-
IEEE 802.1Q	-	IEEE Standard for Local and Metropolitan Area Networks - Virtual Bridged Local Area Networks	-	-

Documents
Document Sharing Hub
Full document details: BS EN 62439-3:2010

CONTENTS

INTRODUCTION 7
1 Scope 8
2 Normative references 8
3 Terms, definitions, abbreviations, acronyms, and conventions 8
3.1 Terms and definitions 8
3.2 Abbreviations and acronyms 9
3.3 Conventions 9
4 Parallel Redundancy Protocol (PRP) 9
4.1 PRP principle of operation 9
4.1.1 PRP network topology 9
4.1.2 PRP LANs with linear or bus topology 10
4.1.3 PRP LANs with ring topology 11
4.1.4 DANP node structure 11
4.1.5 PRP attachment of singly attached nodes 12
4.1.6 Compatibility between singly and doubly attached nodes 12
4.1.7 Network management 12
4.1.8 Implication on configuration 13
4.1.9 Transition to non-redundant networks 13
4.1.10 Duplicate handling 14
4.1.11 Configuration check 18
4.1.12 Network supervision 18
4.1.13 Redundancy management interface 19
4.2 PRP protocol specifications 19
4.2.1 Installation, configuration and repair guidelines 19
4.2.2 MAC addresses 20
4.2.3 Multicast MAC addresses 20
4.2.4 IP addresses 20
4.2.5 Nodes 20
4.2.6 Duplicate accept mode 21
4.2.7 Duplicate discard mode 21
4.3 PRP service specification 27
4.3.1 Arguments 27
4.3.2 NodesTable 28
4.3.3 PRP write 29
4.3.4 PRP read 30
5 High-availability Seamless Redundancy (HSR) 31
5.1 HSR objectives 31
5.2 HSR principle of operation 31
5.2.1 Basic operation with a ring topology 31
5.2.2 DANH node structure 33
5.2.3 Topology 34
5.2.4 RedBox structure 40
5.3 HSR node specifications 42
5.3.1 Host sequence number 42
5.3.2 DANH receiving from its link layer interface 42

Documents
Document Sharing Hub
Full document details: BS EN 62439-3:2010

5.3.3 DANH receiving from an HSR port 42
5.3.4 DANH forwarding rules 43
5.3.5 CoS 44
5.3.6 Clock synchronization 44
5.3.7 Deterministic medium access 44
5.4 HSR RedBox specifications 44
5.4.1 RedBox properties 44
5.4.2 RedBox receiving from interlink 45
5.4.3 RedBox forwarding on the ring 46
5.4.4 RedBox receiving from an HSR port 46
5.4.5 Redbox proxy node table handling 47
5.4.6 RedBox CoS 47
5.4.7 RedBox clock synchonization 47
5.4.8 RedBox medium access 47
5.5 QuadBox specification 47
5.6 Association definition 47
5.7 Frame format for HSR 47
5.7.1 HSR-tagged frame format 47
5.7.2 HSR_Supervision frame 48
5.7.3 Constants 50
6 Protocol Implementation Conformance Statement (PICS) 51
7 PRP/HSR Management Information Base (MIB) 51
Bibliography 58

Figure 1 – PRP example of general redundant network 10
Figure 2 – PRP example of redundant network as two LANs (bus topology) 10
Figure 3 – PRP example of redundant ring with SANs and DANPs 11
Figure 4 – PRP with two DANPs communicating 11
Figure 5 – PRP RedBox, transition from single to double LAN 13
Figure 6 – PRP frame extended by an RCT 15
Figure 7 – PRP VLAN-tagged frame extended by an RCT 15
Figure 8 – PRP constructed, padded frame closed by an RCT 16
Figure 9 – PRP drop window on LAN_A 17
Figure 10 – PRP drop window reduction after a discard 17
Figure 11 – PRP frame from LAN_B was not discarded 18
Figure 12 – PRP synchronized LANs 18
Figure 13 – HSR example of ring configuration for multicast traffic 32
Figure 14 – HSR example of ring configuration for unicast traffic 33
Figure 15 –HSR structure of a DANH 34
Figure 16 – HSR example of topology using two independent networks 35
Figure 17 – HSR example of peer coupling of two rings 36
Figure 18 – HSR example of connected rings 37
Figure 19 – HSR example of coupling two redundant PRP LANs to a ring 38
Figure 20 – HSR example of coupling from a ring node to redundant PRP LANs 39
Figure 21 – HSR example of meshed topology 40
Figure 22 – HSR structure of a RedBox 41

AVA Documents
Document Sharing Hub
Full document details: BS EN 62439-3:2010

Figure 23 – HSR frame without VLAN tag 48
Figure 24 – HSR frame with VLAN tag 48

Table 1 – PRP_Supervision frame with VLAN tag 25
Table 2 – PRP constants 27
Table 3 – PRP arguments 28
Table 4 – PRP arguments 29
Table 5 – PRP write 29
Table 6 – PRP read 30
Table 7 – HSR_Supervision frame with optional VLAN tag 49
Table 8 – HSR Constants 50

Documents
Document Sharing Hub
Full document details: BS EN 62439-3:2010

INTRODUCTION

The IEC 62439 series specifies relevant principles for high availability networks that meet the requirements for industrial automation networks.

In the fault-free state of the network, the protocols of the IEC 62439 series provide ISO/IEC 8802-3 (IEEE 802.3) compatible, reliable data communication, and preserve determinism of real-time data communication. In cases of fault, removal, and insertion of a component, they provide deterministic recovery times.

These protocols retain fully the typical Ethernet communication capabilities as used in the office world, so that the software involved remains applicable.

The market is in need of several network solutions, each with different performance characteristics and functional capabilities, matching diverse application requirements. These solutions support different redundancy topologies and mechanisms which are introduced in IEC 62439-1 and specified in the other Parts of the IEC 62439 series. IEC 62439-1 also distinguishes between the different solutions, giving guidance to the user.

The IEC 62439 series follows the general structure and terms of IEC 61158 series.

The International Electrotechnical Commission (IEC) draws attention to the fact that it is claimed that compliance with this document may involve the use of a patent concerning detection of redundant frames given in 4.1.10.3, and concerning coupling of PRP and HSR LANs given in 5.4 (patent pending).

IEC takes no position concerning the evidence, validity and scope of this patent right.

The holder of this patent right has assured the IEC that he/she is willing to negotiate licences either free of charge or under reasonable and non-discriminatory terms and conditions with applicants throughout the world. In this respect, the statement of the holder of this patent right is registered with IEC. Information may be obtained from:

ABB Switzerland Ltd

Corporate Research

Segelhofstr 1K

5405 Baden

Switzerland

Attention is drawn to the possibility that some of the elements of this document may be the subject of patent rights other than those identified above. IEC shall not be held responsible for identifying any or all such patent rights.

ISO (www.iso.org/patents) and IEC (http://www.iec.ch/tctools/patent_decl.htm) maintain on-line data bases of patents relevant to their standards. Users are encouraged to consult the data bases for the most up to date information concerning patents.

Documents
Document Sharing Hub

Full document details: BS EN 62439-3:2010

INDUSTRIAL COMMUNICATION NETWORKS – HIGH AVAILABILITY AUTOMATION NETWORKS –

Part 3: Parallel Redundancy Protocol (PRP) and High-availability Seamless Redundancy (HSR)

1 Scope

The IEC 62439 series is applicable to high-availability automation networks based on the ISO/IEC 8802-3 (IEEE 802.3) (Ethernet) technology.

This part of the IEC 62439 series specifies two redundancy protocols based on the duplication of the LAN, resp. duplication of the transmitted information, designed to provide seamless recovery in case of single failure of an inter-switch link or switch in the network.

2 Normative references

The following referenced documents are indispensable for the application of this document. For dated references, only the edition cited applies. For undated references, the latest edition of the referenced document (including any amendments) applies.

IEC 60050-191:1990, *International Electrotechnical Vocabulary – Chapter 191: Dependability and quality of service*

IEC 62439-1:2010, *Industrial communication networks – High availability automation networks – Part 1: General concepts and calculation methods*

ISO/IEC 8802-3:2000, *Information technology – Telecommunications and information exchange between systems – Local and metropolitan area networks – Specific requirements – Part 3: Carrier sense multiple access with collision detection (CSMA/CD) access method and physical layer specifications*

IEEE 802.1D:2004, *IEEE standard for local Local and metropolitan area networks Media Access Control (MAC) Bridges*

IEEE 802.1Q*, IEEE standards for local and metropolitan area network. Virtual bridged local area networks*

3 Terms, definitions, abbreviations, acronyms, and conventions

3.1 Terms and definitions

For the purposes of this document, the terms and definitions given in IEC 60050-191, as well as in IEC 62439-1, apply, in addition to the following.

3.1.1
extended frame
frame that has been extended by a Redundancy Control Trailer

3.1.2
interlink
link that connects two network hierarchies

Documents
Document Sharing Hub

Full document details: BS EN 62439-3:2010

3.1.3
RedBox
device allowing to attach single attached nodes to a redundant network

3.1.4

QuadBox
Quadruple port device connecting two peer HSR rings, which behaves as an HSR node in each ring and is able to filter the traffic and forward it from ring to ring

3.1.5

HSR frame
frame that carries the HSR EtherType

3.2 Abbreviations and acronyms

For the purposes of this document, the following abbreviations and acronyms apply, in addition to those given in IEC 62439-1:

DANH Double attached node implementing HSR

DANP Double attached node implementing PRP

ICMP Internet Control Message Protocol (part of the Internet protocol suite)

RCT Redundancy Check Tag

SRP Serial Redundancy Protocol

VDAN Virtual Doubly Attached Node (SAN as visible through a RedBox)

3.3 Conventions

This document follows the conventions defined in IEC 62439-1.

4 Parallel Redundancy Protocol (PRP)

4.1 PRP principle of operation

4.1.1 PRP network topology

This redundancy protocol implements redundancy in the devices, through doubly attached nodes operating according to PRP (DANPs).

A DANP is attached to two independent LANs of similar topology, named LAN_A and LAN_B, which operate in parallel. A source DANP sends the same frame over both LANs and a destination DANP receives it from both LANs within a certain time, consumes the first frame and discards the duplicate.

Figure 1 shows a redundant network consisting of two switched LANs, which can have any topology, e.g. tree, ring or meshed.

Documents
Document Sharing Hub

Full document details: BS EN 62439-3:2010

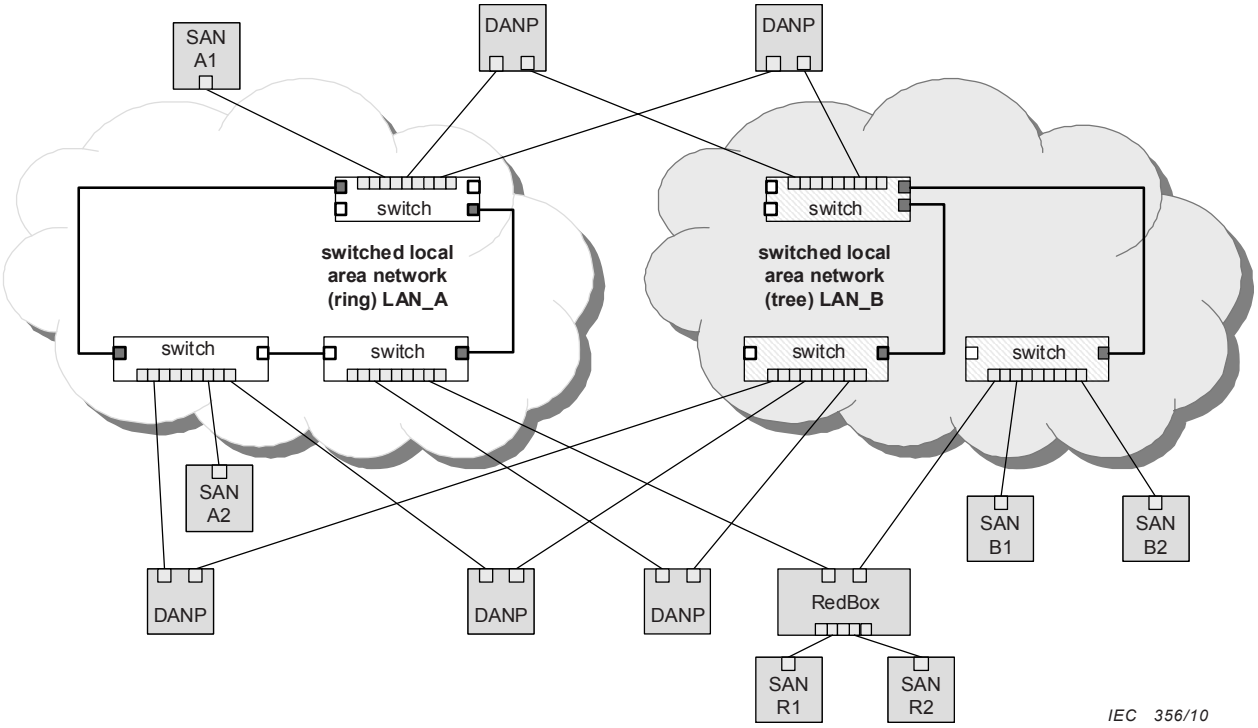

Figure 1 – PRP example of general redundant network

The two LANs are identical in protocol at the MAC-LLC level, but they can differ in performance and topology. Transmission delays may also be different, especially if one of the networks reconfigures itself, e.g. using RSTP, to overcome an internal failure.

The two LANs follow configuration rules that allow the network management protocols such as Address Resolution Protocol (ARP) to operate correctly.

The two LANs have no connection between them and are assumed to be fail-independent. Redundancy can be defeated by single points of failure, such as a common power supply or a direct connection whose failure brings both networks down. Installation guidelines in this document provide guidance to the installer to achieve fail-independence.

4.1.2 PRP LANs with linear or bus topology

As an example of a simpler configuration,

Figure 2 draws a PRP network as two LANs in linear topology, which may also be a bus topology.

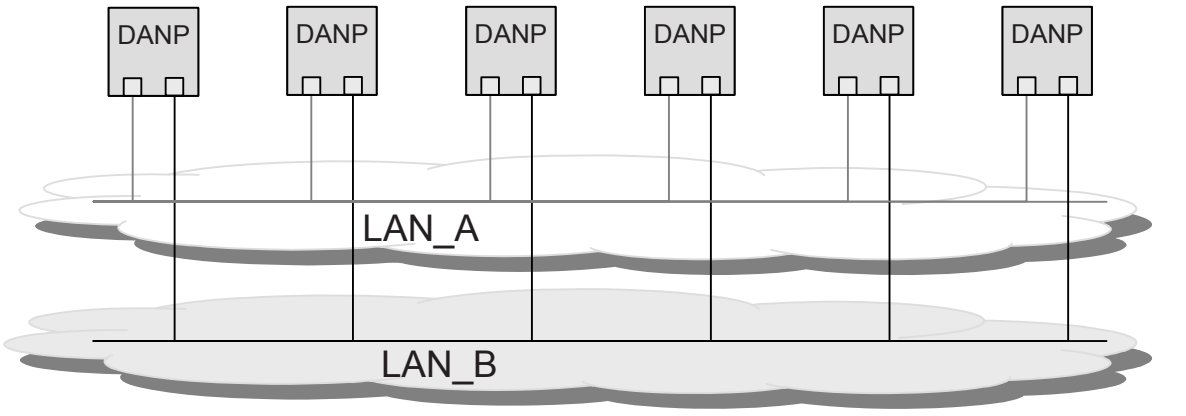

AVA Documents
Document Sharing Hub
Full document details: BS EN 62439-3:2010

Figure 2 – PRP example of redundant network as two LANs (bus topology)

4.1.3 PRP LANs with ring topology

The two LANs can have a ring topology, as Figure 3 shows.

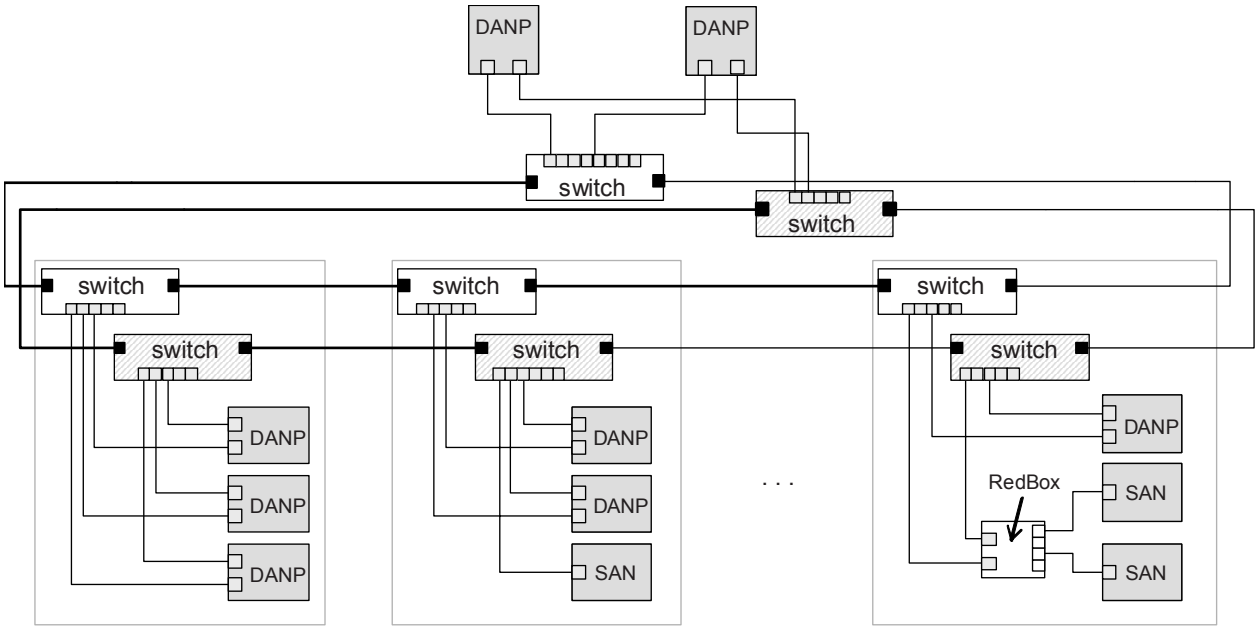

Figure 3 – PRP example of redundant ring with SANs and DANPs

4.1.4 DANP node structure

Each node has two ports that operate in parallel and that are attached to the same upper layers of the communication stack through the Link Redundancy Entity (LRE), as Figure 4 shows.

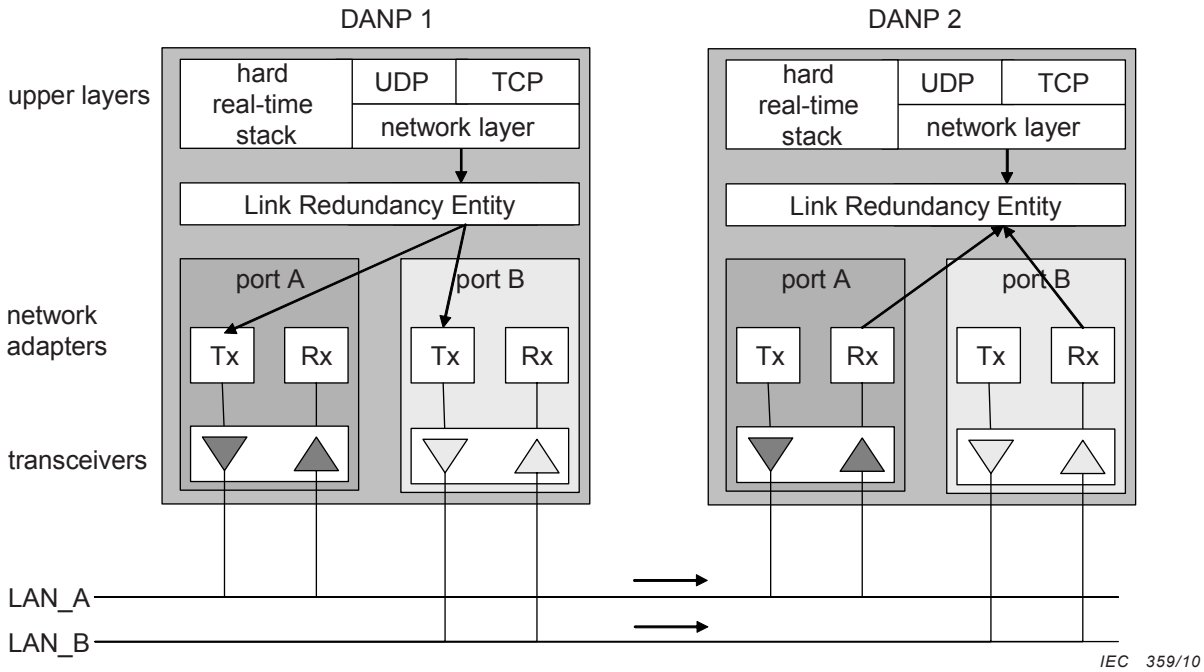

Figure 4 – PRP with two DANPs communicating

Documents
Document Sharing Hub
Full document details: BS EN 62439-3:2010

The Link Redundancy Entity (LRE) has two tasks: handling of duplicates and management of redundancy. This layer presents toward its upper layers the same interface as the network adapter of a non-redundant adapter.

When receiving a frame from the node's upper layers, the LRE sends the frame through both its ports at nearly the same time.

The two frames transit through the two LANs with different delays, ideally they arrive at the same time at the destination node.

When receiving frames from the network, the LRE forwards the first received frame of a pair to the node's upper layers and discards the duplicate frame (if it arrives).

For management of redundancy, the LRE can append a Redundancy Check Trailer (RCT) including a sequence number to the frames it sends to keep track of duplicates. In addition, the LRE periodically sends PRP_Supervision frames and evaluates the PRP_Supervision frames of the other DANPs.

4.1.5 PRP attachment of singly attached nodes

Singly attached nodes (SANs) can be attached in two ways:

- SANs can be attached directly to one LAN only. SANs can only communicate with other SANs on the same LAN. For instance, in Figure 1, SAN A1 can communicate with SAN A2, but not with SAN B1 or SAN B2. SANs can communicate with all DANPs.
- SANs can be attached over a RedBox (redundancy box) to both LANs, as Figure 1 shows for R1 and R2 (see also 4.1.9). Such SANs can communicate with all SANs, for instance SAN A1 and SAN R1 can communicate.

NOTE SANs do not need to be aware of PRP, they can be off-the-shelf computers.

In some applications, only availability-critical devices need a double attachment, for instance the operator workplaces, while the majority of the devices are SANs. Taking advantage of the basic infrastructure of PRP, a DANP can be attached to two different switches of the same LAN (e.g. a ring) and use protocols different from PRP to reconfigure the network in case of failure. The DANP then behaves as a switch element according to IEEE 802.1D. For instance, the switch element may implement the MRP protocol, the RSTP protocol, or a subset of RSTP, where there is no forwarding of traffic between the ports. These abilities are optional and not detailed in this International Standard. The supported mode is specified in the PICS (see 6).

4.1.6 Compatibility between singly and doubly attached nodes

Singly attached nodes (SAN), for instance maintenance laptops or printers that belong to one LAN, can be connected to any LAN. A SAN connected to one LAN cannot communicate directly to a SAN connected to the other LAN. Switches are always SANs. These SANs are not aware of PRP redundancy, so DANPs generate a traffic that these SANs understand. The condition is however that the SANs ignore the RCT in the frames, which should be the case since a SAN cannot distinguish the RCT from ISO/IEC 8802-3 (IEEE 802.3) padding. Conversely, DANPs understand the traffic generated by SANs, since these do not append a RCT. They only forward one frame to their upper layers since the SAN traffic uses one LAN only. If a DANP cannot positively identify that the remote device is a DANP, it considers it as a SAN.

4.1.7 Network management

A node has the same MAC address on both ports, and only one set of IP addresses assigned to that address. This makes redundancy transparent to the upper layers. Especially, this allows the Address Resolution Protocol (ARP) to work the same as with a SAN. Switches in a LAN are not doubly attached devices, and therefore all managed switches have different IP addresses. A network management tool is preferably a DANP and can access nodes and

Documents
Document Sharing Hub

Full document details: BS EN 62439-3:2010

switches as if they all belong to the same network. Especially, network management implemented in a DANP is able to see SANs connected to either LAN.

Some applications require different MAC addresses on the redundant ports, and these MAC addresses may be different from the default MAC address of that node. This involves address substitution mechanisms which are not specified in this International Standard. However, the basic protocol and the frame format are prepared for such extension. Nodes that support MAC address substitution are indicated as supporting PICS_SUBS.

4.1.8 Implication on configuration

Since the same frame can come from the two ports with significant time difference, the period of cyclic time-critical data must be chosen so that it considers the difference between worst case and best case path latency between publisher and subscriber.

4.1.9 Transition to non-redundant networks

The mechanism of duplicate rejection can be implemented by the RedBox that does the transition between a SAN and the doubled LANs, as Figure 5 shows. The RedBox mimics the SANs connected behind it (called VDA or virtual DANs) and multicasts supervision frames on their behalf, appending its own information. The RedBox is itself a DANP and has its own IP address for management purposes, but it may also perform application functions.

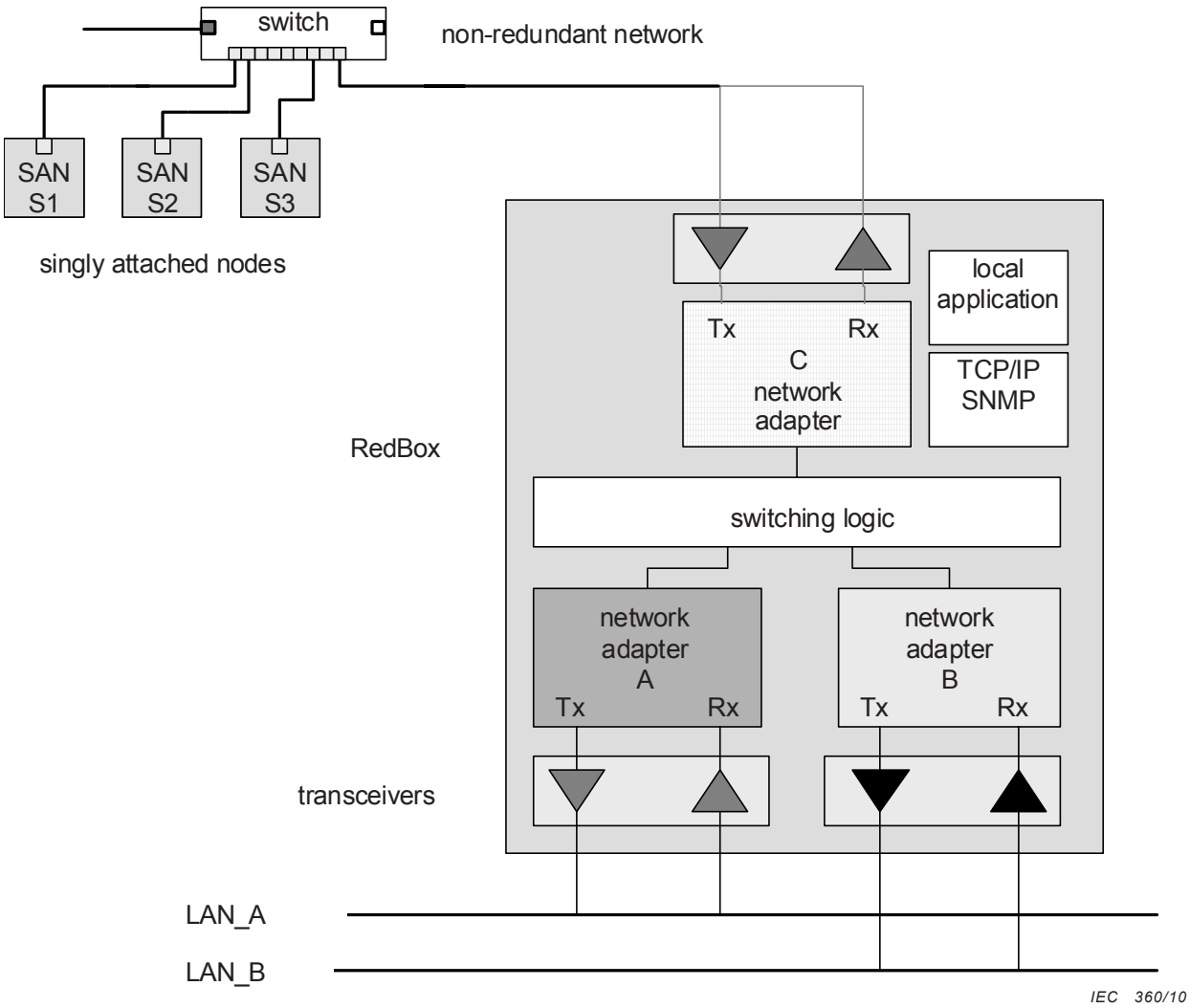

Figure 5 – PRP RedBox, transition from single to double LAN

Documents
Document Sharing Hub

Full document details: BS EN 62439-3:2010

4.1.10 Duplicate handling

4.1.10.1 Methods for handling duplicates

Since a DANP receives the same frame over both adapters, when both are operational, it should keep one and ignore the duplicate.

There are two methods for handling duplicates:

a) duplicate accept, in which the sender LRE uses the original frames and the receiver LRE forwards both frames it receives to its upper protocol layers;

b) duplicate discard, in which the sender LRE appends a redundancy control trailer to both frames it sends and the receiver LRE uses that redundancy control trailer to send only the first frame of a pair to its upper layers and filter out duplicates.

4.1.10.2 Duplicate accept

This method does not attempt to discard duplicates at the link layer. The sender LRE sends the same frame as it would in the non-redundant case over both LANs. The receiver's LRE forwards both frames of a pair (if both arrive) to its upper layers, assuming that well-designed network protocols and applications are able to withstand duplicates – indeed IEEE 802.1D explicitly states that it cannot ensure freedom of duplicates.

The internet stack, consisting of a network layer with an UDP and a TCP transport layer, is assumed to be resilient against duplicates. The TCP protocol is designed to reject duplicates, so it discards the second frame of a pair. The UDP layer is by definition connectionless and unacknowledged. All applications that use UDP are assumed to be capable of handling duplicates, since duplication of frames can occur in any network. In particular, a UDP frame is assumed to be idempotent, i.e. sending it twice has the same effect as sending it once. Administrative protocols of the internet such as ICMP and ARP are not affected by duplicates, since they have their own sequence numbering.

Real-time stack that operate on the publisher-subscriber principle are not affected by duplicates, since only the latest value is kept. Duplicate reception increases robustness since a sample that gets lost on one LAN is usually received from the other LAN.

Therefore, one can assume that handling of duplicates is taken care of by the usual network protocols, but one has to check if each application complies with these assumptions.

This simple duplicate accept method does not provide easy redundancy supervision, since it does not keep track of correct reception of both frames. The receiver would need hash tables to know that a frame is the first of a pair of a duplicate, and could for this effect store the CRC and length of each frame as a hash code. Such redundancy supervision method is however not specified in this International Standard, but it is not excluded.

4.1.10.3 Duplicate discard in the link layer

4.1.10.3.1 Principle

It is advantageous to discard duplicates already at the link layer.

Without duplicate discard, the processor receives twice as many interrupt requests as when only one LAN is connected. To offload the application processor, the LRE can perform Duplicate Discard, possibly with an independent pre-processor or an intelligent Ethernet controller. This allows at the same time to improve the redundancy supervision.

The duplicate discard protocol uses an additional four-octet field in the frame, the Redundancy Control Trailer (RCT), which the LRE inserts into each frame that it receives from the upper layers before sending, as Figure 6 shows. The RCT consists of the following parameters:

AVA Documents
Document Sharing Hub

Full document details: BS EN 62439-3:2010

a) 16-bit sequence number (SequenceNr);

b) 4-bit LAN identifier (Lan);

c) 12 bit frame size (LSDU_size).

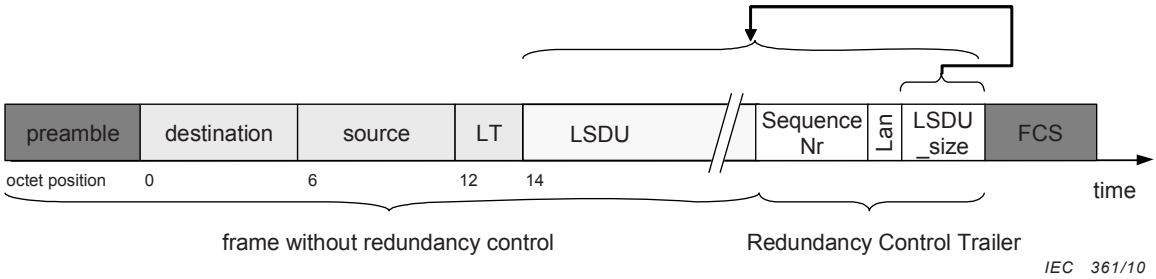

Figure 6 – PRP frame extended by an RCT

4.1.10.3.2 Use of SequenceNr

Each time a LRE sends a frame to a particular destination, it increases the sequence number corresponding to that destination and sends both (nearly identical) frames over both LANs.

The receiving LRE can then detect duplicates based on the RCT.

This method considers that SANs also exist on the network, and that frames sent by SANs could be wrongly rejected as duplicates because they happen to have a trailing field with the same sequence number and the same size. However, SANs send on one LAN only, and the source will not be the same as that of another frame, so a frame from a SAN will never be discarded.

4.1.10.3.3 Use of LAN

The field LAN can take one of two values: 1 010 indicating that the frame has been sent over LAN_A and 1 011 indicating that the frame has been sent over LAN_B. This allows detecting installation errors.

4.1.10.3.4 Use of LSDU_size

To allow the receiver LRE to distinguish easily frames coming from nodes that obey to the PRP from the non-redundant ones, the sender LRE appends to the frame the length of the link service data unit (LSDU) in octets in a 12-bit field.

EXAMPLE If the frame carries a 100-octets LSDU, the size field equals LSDU+RCT: 104 = 100 + 4.

In VLANs, frame VLAN tags may be added or removed during transit through a switch. To make the length field independent of VLAN tagging, only the LSDU and the RCT are considered in the LSDU_size, as Figure 7 shows.

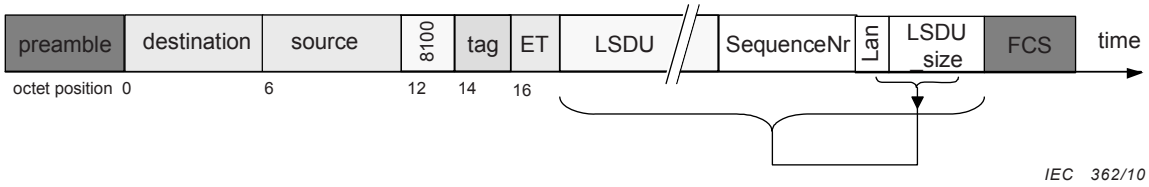

Figure 7 – PRP VLAN-tagged frame extended by an RCT

The receiver scans the frames, preferably starting from the end. If it detects that the 12 bits before the end correspond to the LSDU size, and that the LAN identifier matches the identifier of the LAN it is attached to (see 4.1.11), the frame is a candidate for rejection.

Documents
Document Sharing Hub

Full document details: BS EN 62439-3:2010

Since short frames need padding to meet the minimum frame size of 64 octets, the sender already includes the padding to speed up scanning from behind, as Figure 8 shows.

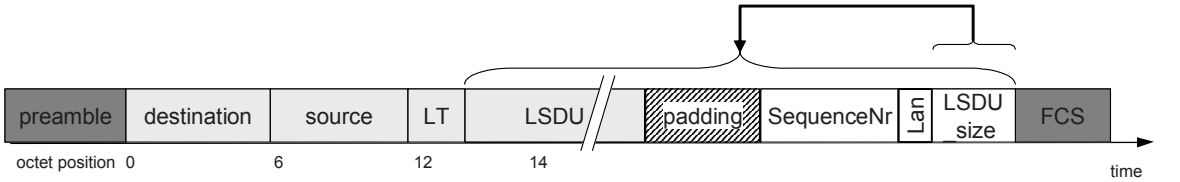

Figure 8 – PRP constructed, padded frame closed by an RCT

NOTE A VLAN-tagged frame can pass several switches which may remove or insert VLAN tags. If the sender observes the ISO/IEC 8802-3 (IEEE 802.3) rule to send a minimum frame size of 68 octets for a VLAN-tagged frame and of 64 for a VLAN-untagged frame, there should never be a situation in which there is padding before and after the RCT. Scanning from behind is specified as a matter of precaution.

4.1.10.3.5 Frame size restriction

Appending the RCT could generate oversize frames that exceed the maxValidSize foreseen by ISO/IEC 8802-3 (IEEE 802.3).

To maintain compliance with IEEE 802.3:2005, the communication software in a DANP using duplicate discard is configured for a maximum payload size of 1 496 octets.

NOTE Longer payloads would work in most cases, but this requires previous testing. Many switches are dimensioned for double-VLAN-tagged (non-IEEE 802.3 compliant) frames that have a maximum size of 1 526 octets. Most Ethernet controllers are certified up to 1 528 octets. Most switches would forward correctly frames of up to 1 536 octets, but this cannot be relied upon.

4.1.10.3.6 Discard algorithm

The following algorithm is optional, other methods such as hash table can be used.

The receiver assumes that frames coming from a DANP are sent in sequence with increasing sequence numbers. The sequence number expected for the next frame is kept in the variables ExpectedSeqA, respectively ExpectedSeqB.

At reception, the correct sequence can be checked by comparing ExpectedSeqA with the received sequence number in the RCT, CurrentSeqA. Regardless of the result, ExpectedSeqA is set to one more than CurrentSeqA to allow checking the next expected sequence number on that line. The same applies to ExpectedSeqB and CurrentSeqB on LAN_B.

Both LANs thus maintain a sliding drop window of contiguous sequence numbers, the upper bound being ExpectedSeqA (the next expected sequence number on that LAN), excluding that value, the lower bound being StartSeqA (the lowest sequence number that leads to a discard on that LAN) as Figure 9 shows for LAN_A. The same applies to ExpectedSeqB and StartSeqB on LAN_B.

Documents
Document Sharing Hub

Full document details: BS EN 62439-3:2010

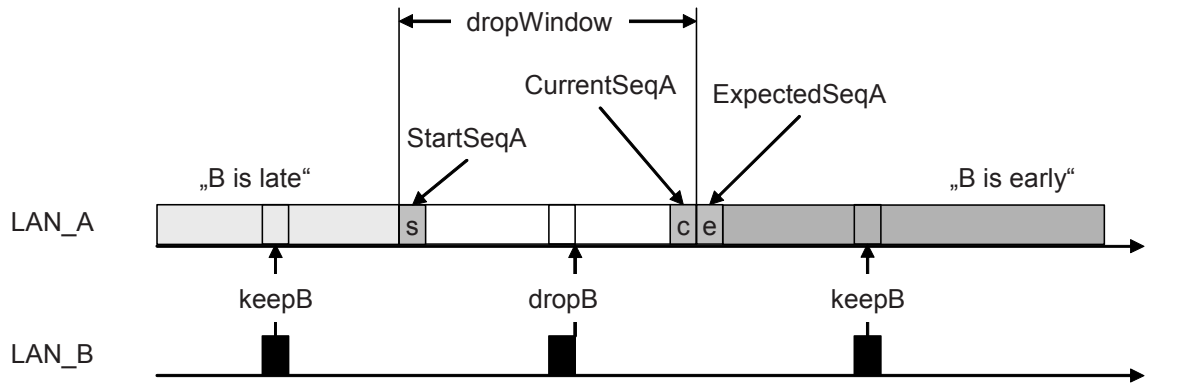

Figure 9 – PRP drop window on LAN_A

After checking the correct sequence number, the receiver decides whether to discard the frame or not. Assuming that LAN_A has established a non-void drop window (as in Figure 9), a frame from LAN_B whose sequence number CurrentSeqB fits into the drop window of A is discarded (dropB in Figure 9). In all other cases, the frame is kept and forwarded to the upper protocol layers (keepB in Figure 9).

Discarding the frame (dropB in Figure 9) shrinks the drop window size on LAN_A since no more frames from B with an earlier sequence number are expected, thus StartSeqA is increased to one more than the received CurrentSeqB. Also, the drop window on B is reset to a size of 0 (StartSeqB = ExpectedSeqB), since obviously B lags behind A and no frames from A should be discarded, as Figure 10 shows.

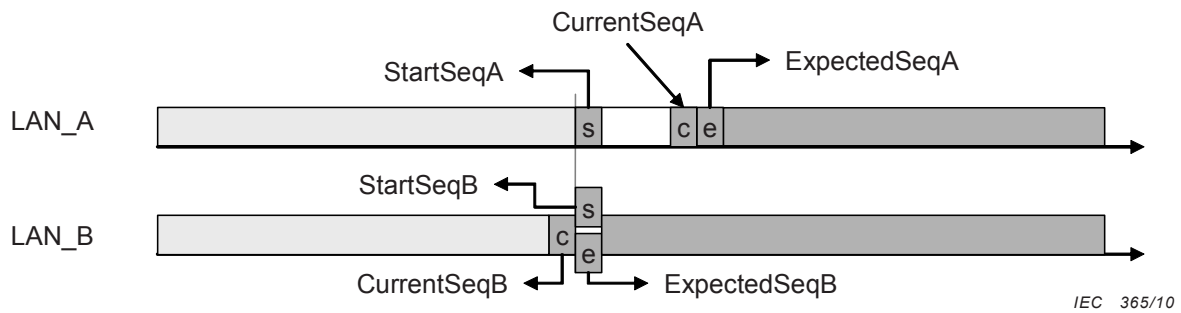

Figure 10 – PRP drop window reduction after a discard

In the situation of Figure 10, if several frames come in sequence over the same LAN_A, but none on LAN_B, they are kept since their CurrentSeqA is outside the drop window of LAN_B, and the drop window of LAN_A grows by one position. If frames keep on coming over LAN_A but not LAN_B when the maximum drop window size is reached, StartSeqA is also incremented to slide the drop window.

When a received frame is out of the drop window of the other LAN, it is kept and the drop window of that line is reduced to a size of 1, meaning that only a frame from the other line with the same sequence number is discarded, while the drop window of the other line is reset to 0, meaning that no frame is discarded, as Figure 11 shows.

Documents
Document Sharing Hub

Full document details: BS EN 62439-3:2010