BS EN 703:2021

BSI Standards Publication

Agricultural machinery — Safety — Silage loading, mixing and/or chopping and distributing machines

Documents
Document Sharing Hub

Full document details: BS EN 703:2021

National foreword

This British Standard is the UK implementation of EN 703:2021. It supersedes BS EN 703:2004+A1:2009, which is withdrawn.

The UK participation in its preparation was entrusted to Technical Committee AGE/32, Agricultural implements and trailers.

A list of organizations represented on this committee can be obtained on request to its committee manager.

Contractual and legal considerations

This publication has been prepared in good faith, however no representation, warranty, assurance or undertaking (express or implied) is or will be made, and no responsibility or liability is or will be accepted by BSI in relation to the adequacy, accuracy, completeness or reasonableness of this publication. All and any such responsibility and liability is expressly disclaimed to the full extent permitted by the law.

This publication is provided as is, and is to be used at the recipient's own risk.

The recipient is advised to consider seeking professional guidance with respect to its use of this publication.

This publication is not intended to constitute a contract. Users are responsible for its correct application.

This publication has been prepared under a mandate given to the European Standards Organizations by the European Commission and the European Free Trade Association. It is intended to support requirements of the EU legislation detailed in the European Foreword. A European Annex, usually Annex ZA or ZZ, describes how this publication relates to that EU legislation.

For the Great Britain market (England, Scotland and Wales), if UK Government has designated this publication for conformity with UKCA marking (or similar) legislation, it may contain an additional National Annex. Where such a National Annex exists, it shows the correlation between this publication and the relevant UK legislation. If there is no National Annex of this kind, the relevant Annex ZA or ZZ in the body of the European text will indicate the relationship to UK regulation applicable in Great Britain. References to EU legislation may need to be read in accordance with the UK designation and the applicable UK law. Further information on designated standards can be found at www.bsigroup.com/standardsandregulation.

For the Northern Ireland market, UK law will continue to implement relevant EU law subject to periodic confirmation. Therefore Annex ZA/ZZ in the European text, and references to EU legislation, are still valid for this market.

UK Government is responsible for legislation. For information on legislation and policies relating to that legislation, consult the relevant pages of www.gov.uk.

© The British Standards Institution 2021
Published by BSI Standards Limited 2021

ISBN 978 0 539 00212 6

AVA Documents
Document Sharing Hub

Full document details: BS EN 703:2021

ICS 65.060.99

Compliance with a British Standard cannot confer immunity from legal obligations.

This British Standard was published under the authority of the Standards Policy and Strategy Committee on 31 July 2021.

Amendments/corrigenda issued since publication

Date	Text affected

Documents
Document Sharing Hub

Documents
Document Sharing Hub

EUROPEAN STANDARD

NORME EUROPÉENNE

EUROPÄISCHE NORM

EN 703

July 2021

ICS 65.060.99

Supersedes EN 703:2004+A1:2009

English Version

Agricultural machinery - Safety - Silage loading, mixing and/or chopping and distributing machines

Matériel agricole - Sécurité - Désileuses chargeuses, mélangeuses et/ou hacheuses et distributrices

Landmaschinen - Sicherheit - Maschinen zum Laden, Mischen und/oder Zerkleinern und Verteilen von Silage

This European Standard was approved by CEN on 12 March 2021.

CEN members are bound to comply with the CEN/CENELEC Internal Regulations which stipulate the conditions for giving this European Standard the status of a national standard without any alteration. Up-to-date lists and bibliographical references concerning such national standards may be obtained on application to the CEN-CENELEC Management Centre or to any CEN member.

This European Standard exists in three official versions (English, French, German). A version in any other language made by translation under the responsibility of a CEN member into its own language and notified to the CEN-CENELEC Management Centre has the same status as the official versions.

CEN members are the national standards bodies of Austria, Belgium, Bulgaria, Croatia, Cyprus, Czech Republic, Denmark, Estonia, Finland, France, Germany, Greece, Hungary, Iceland, Ireland, Italy, Latvia, Lithuania, Luxembourg, Malta, Netherlands, Norway, Poland, Portugal, Republic of North Macedonia, Romania, Serbia, Slovakia, Slovenia, Spain, Sweden, Switzerland, Turkey and United Kingdom.

EUROPEAN COMMITTEE FOR STANDARDIZATION
COMITÉ EUROPÉEN DE NORMALISATION
EUROPÄISCHES KOMITEE FÜR NORMUNG

CEN-CENELEC Management Centre: Rue de la Science 23, B-1040 Brussels

© 2021 CEN All rights of exploitation in any form and by any means reserved worldwide for CEN national Members.

Ref. No. EN 703:2021 E

Documents
Document Sharing Hub

Full document details: BS EN 703:2021

Contents

Page

European foreword 4
Introduction 5
1 Scope 6
2 Normative references 7
3 Terms and definitions 8
4 Safety requirements and/or protective/risk reduction measures 9
4.1 General 9
4.1.1 Principles 9
4.1.2 Principles of safety integration 9
4.1.3 Control systems 10
4.1.4 Guards and protective devices 10
4.1.5 Electricity supply, batteries 10
4.1.6 Extreme temperatures 10
4.1.7 Fire and explosion 10
4.1.8 Vibrations 10
4.1.9 Maintenance 10
4.1.10 Work positions and operator's station 10
4.1.11 Uncontrolled movements 11
4.1.12 Roll-over and tip-over 11
4.1.13 Means of access 11
4.1.14 Falling or ejected objects or fluids 11
4.2 Location of the manual controls 11
4.2.1 General 11
4.2.2 Requirements for hold-to-run controls 11
4.2.3 Additional requirements for manual controls 12
4.3 Visibility 12
4.3.1 For work area of the cutting, loading tools and loading door located at front of the machine 12
4.3.2 For work area of the cutting, loading tools and loading door located at rear of the machine 13
4.4 Loading device 16
4.4.1 Stopping time of powered cutting and loading tools 16
4.4.2 Loading door 16
4.5 Cutting and loading tools 16
4.5.1 General 16
4.5.2 Maintenance of cutting tools 17
4.5.3 Blockages 17
4.5.4 Protection against inadvertent re-engagement in case of mechanical elements stopped by blockage 18
4.6 Mixing and/or chopping device 18
4.6.1 Protection against contact with moving parts 18
4.6.2 Checking of the mixing 19
4.6.3 Top edges of the chamber of the machine 19
4.6.4 Manual addition of feedstuffs 20

Documents
Document Sharing Hub
Full document details: BS EN 703:2021

4.6.5 Maintenance of mixing and/or chopping tools 20
4.7 Distribution device 20
4.7.1 General 20
4.7.2 Case where a conveyor is used 21
4.7.3 Case where an auger is used 26
4.7.4 Case where a distributor cylinder is used 27
4.7.5 Case of free discharge 29
4.7.6 Case of turbines 29
4.8 Weighing device display 32
4.9 Noise 33
4.9.1 Noise reduction as a safety requirement 33
4.9.2 Verification of requirements on noise 34
4.10 Jacking points 34
4.11 Brakes 34
4.12 Stability and immobilisation 34
4.12.1 Stability and immobilisation of the detached machine 34
4.12.2 Minimum load on the drawbar hitch 35
4.13 Remote control 35
4.14 Electro-magnetic compatibility (EMC) 35

5 Verification of the safety requirements and/or protective/risk reduction measures 35
5.1 Measurement of the tools' stopping time 35

6 Information for use 36
6.1 Instruction handbook 36
6.2 Marking 38
6.3 Safety signs 39

Annex A (informative) Examples of machines and components 40

Annex B (informative) List of significant hazards 49

Annex ZA (informative) Relationship between this European Standard and the essential requirements of Directive 2006/42/EC aimed to be covered 53

Bibliography 57

Documents
Document Sharing Hub
Full document details: BS EN 703:2021

European foreword

This document (EN 703:2021) has been prepared by Technical Committee CEN/TC 144 "Tractors and machinery for agriculture and forestry", the secretariat of which is held by AFNOR.

This European Standard shall be given the status of a national standard, either by publication of an identical text or by endorsement, at the latest by January 2022, and conflicting national standards shall be withdrawn at the latest by January 2022.

Attention is drawn to the possibility that some of the elements of this document may be the subject of patent rights. CEN shall not be held responsible for identifying any or all such patent rights.

This document supersedes EN 703:2004+A1:2009.

This document has been prepared under a mandate given to CEN by the European Commission and the European Free Trade Association, and supports essential requirements of EU Directive(s).

For relationship with EU Directive(s), see informative Annex ZA, which is an integral part of this document.

EN 703:2004+A1:2009 has been technically revised. The following significant changes were introduced:

— update the normative references;

— clarification of the scope (excludes silage buckets);

— improvement of the safety requirements in particular regarding controls, visibility, protection against cutting tools, blockages, loading door, inspection of mixing, access (addition of feedstuffs), conveyors, access to turbines;

— addition of new clauses on: jacking points, brakes, stability and immobilisation, remote control, electro-magnetic compatibility (EMC), completion of instructions, safety signs;

— addition of new subclauses under 4.1 to refer to the relevant clauses of EN ISO 4254-1:2015 that apply without change or exclusion.

Any feedback and questions on this document should be directed to the users' national standards body. A complete listing of these bodies can be found on the CEN website.

According to the CEN-CENELEC Internal Regulations, the national standards organisations of the following countries are bound to implement this European Standard: Austria, Belgium, Bulgaria, Croatia, Cyprus, Czech Republic, Denmark, Estonia, Finland, France, Germany, Greece, Hungary, Iceland, Ireland, Italy, Latvia, Lithuania, Luxembourg, Malta, Netherlands, Norway, Poland, Portugal, Republic of North Macedonia, Romania, Serbia, Slovakia, Slovenia, Spain, Sweden, Switzerland, Turkey and the United Kingdom.

Documents
Document Sharing Hub

Full document details: BS EN 703:2021

Introduction

This document is a type-C standard as specified in EN ISO 12100.

The machinery concerned and the extent to which hazards, hazardous situations and hazardous events are covered are indicated in the scope of this document. These hazards are specific to silage loading, mixing and/or chopping and distributing machines.

Significant hazards that are common to all of the agricultural machines (self-propelled, mounted, semi-mounted and trailed) are dealt with in EN ISO 4254-1.

When provisions of this type-C standard are different from those which are stated in type A or B standards, the provisions of this type-C standard take precedence over the provisions of the other standards for machines that have been designed and built according to the provisions of this type-C standard.

This document is of relevance, in particular, for the following stakeholder groups representing the market players with regard to machinery safety:

— machine manufacturers (small, medium and large enterprises);

— health and safety bodies (regulators, accident prevention organizations, market surveillance, etc.).

Others can be affected by the level of machinery safety achieved with the means of the document by the above-mentioned stakeholder groups:

— machine users/employers (small, medium and large enterprises);

— machine users/employees (e.g. trade unions, organizations for people with special needs);

— service providers, e.g. for maintenance (small, medium and large enterprises);

— consumers (in case of machinery intended for use by consumers).

The above-mentioned stakeholder groups have been given the possibility to participate at the drafting process of this document.

Documents
Document Sharing Hub
Full document details: BS EN 703:2021

1 Scope

This document, used together with EN ISO 4254-1:2015, specifies the safety requirements and their verification for the design and construction of mounted, semi-mounted, trailed or self-propelled machines that have a combination of two or more of the following functions: loading, mixing, chopping and distributing silage and/or other feedstuffs or materials used for animal bedding such as straw, to be used by one operator only. It includes those fitted with a built-in loading crane. In addition, it specifies the type of information on safe working practices (including residual risks) to be provided by the manufacturer.

This document applies only to machines that have the following functional combinations:

— mixing and distributing functions;

— mixing, chopping and distributing functions;

— loading, mixing and distributing functions;

— loading, mixing, chopping and distributing functions;

— chopping and distributing functions; or

— loading, chopping and distributing functions.

Silage block cutters, even if they carry out a single function, are covered by this document.

This document does not apply to:

— machines which pick up green fodder directly from the field;

— loading cranes;

— silage buckets;

— round or rectangular unbalers.

NOTE 1 Loading cranes are dealt with in EN 12999:2020.

NOTE 2 Autonomous silage loading, mixing and/or chopping and distributing machines (robotic feed systems) will be dealt with in a separate standard (EN ISO 3991, under preparation).

This document deals with the significant hazards, hazardous situations and events relevant to machines for loading, mixing and/or chopping and distributing silage and/or other feedstuffs, when they are used as intended and under the conditions foreseen by the manufacturer as listed in Clause 4, except for the hazards arising from:

— failure of the control circuit;

— inadequate seating;

— inadequate lighting;

— travelling of machinery;

Documents
Document Sharing Hub

Full document details: BS EN 703:2021

— break-up of parts rotating at high speed;

— cutting hazard during service on sharp parts (e.g. blades of the mixing and/or chopping device).

It is not applicable to environmental hazards (except noise).

It does not deal with stability when travelling.

This document is not applicable to machines for loading, mixing and/or chopping and distributing silage and/or other feedstuffs which are manufactured before the date of publication of this document by CEN.

2 Normative references

The following documents are referred to in the text in such a way that some or all of their content constitutes requirements of this document. For dated references, only the edition cited applies. For undated references, the latest edition of the referenced document (including any amendments) applies.

EN 15811:2014, *Agricultural machinery - Fixed guards and interlocked guards with or without guard locking for moving transmission parts (ISO/TS 28923:2012 modified)*

EN ISO 13851:2019, *Safety of machinery - Two-hand control devices - Principles for design and selection (ISO 13851:2019)*

EN ISO 4254-1:2015,[1)] *Agricultural machinery - Safety - Part 1: General requirements (ISO 4254-1:2013)*

EN ISO 11688-1:2009, *Acoustics - Recommended practice for the design of low-noise machinery and equipment - Part 1: Planning (ISO/TR 11688-1:1995)*

EN ISO 12100:2010, *Safety of machinery - General principles for design - Risk assessment and risk reduction (ISO 12100:2010)*

EN ISO 13855:2010, *Safety of machinery - Positioning of safeguards with respect to the approach speeds of parts of the human body (ISO 13855:2010)*

EN ISO 13857:2019, *Safety of machinery — Safety distances to prevent hazard zones being reached by upper and lower limbs (ISO 13857:2019)*

ISO 3767-1:2016, *Tractors, machinery for agriculture and forestry, powered lawn and garden equipment — Symbols for operator controls and other displays — Part 1: Common symbols*

ISO 11684:1995, *Tractors, machinery for agriculture and forestry, powered lawn and garden equipment — Safety signs and hazard pictorials — General principles*

ISO 15817:2012, *Earth-moving machinery — Safety requirements for remote operator control systems*

1) An amendment is under preparation.

Documents
Document Sharing Hub
Full document details: BS EN 703:2021

3 Terms and definitions

For the purposes of this document, the terms and definitions given in EN ISO 12100:2010 and the following apply.

ISO and IEC maintain terminological databases for use in standardization at the following addresses:

— IEC Electropedia: available at https://www.electropedia.org/

— ISO Online browsing platform: available at https://www.iso.org/obp

Note 1 to entry: Examples of machines and components, illustrating the following definitions are given in Annex A.

3.1 Machines

3.1.1
silage block cutter
machine mounted on the rear 3-point linkage of a tractor that consists of a main guiding frame, equipped with a set of horizontal tines, carrying the cutting frame equipped with one or more cutting knives, intended to cut out a silage block, to take it from the silo and to discharge or distribute it

Note 1 to entry: This machine can be equipped with a distribution device.

3.1.2
silage bucket
bucket intended to be fitted as an attachment on a front loader or a self-propelled variable reach truck and which carries out at least loading and distributing functions

3.1.3
round or rectangular unbaler
machine for unbaling of round or rectangular bales and distribution at ground level

Note 1 to entry: Illustration is given in Figure A.12.

3.2 Functions

3.2.1
mixing
operation for blending two or more different materials without reducing the size of their components

3.2.2
chopping
operation to reduce the size of the constituent elements of a material or to break up an agglomerated or an entangled material

3.3 Loading device

3.3.1
cutting and loading tools
set of elements, consisting of the loading arm and of tools for taking the materials such as rotary cutters, knives, blades, teeth, etc., needed for picking-up (i.e. cutting) the material and for loading the machine

Documents
Document Sharing Hub

Full document details: BS EN 703:2021

3.3.2
loading crane
powered crane comprising a column, which slews about a base, and a boom system which is attached onto the top of the column, and which is fitted on the machine and is designed for loading product into the machine by means of a grab, a hook or any other device

[SOURCE: EN 12999:2011, definition 3.1.1 modified]

3.3.3
loading door
mobile part fitted generally at the rear of the machine, which is used for handling and/or for containing the material and/or loading the products inside the machine, and which is used as a door for closing the mixing and/or chopping chamber

3.4
mixing and/or chopping device
set of elements such as one or more rotating auger(s), rotating paddle auger, moving floor, conveyor, separator, turbine

3.5
distribution device
set of elements (such as conveyor belt, auger, distributor cylinder, turbine) operated to unload the materials from the machine and to deposit them where required (on the ground, in troughs, on feeding belts, etc.)

3.6
work station
position of the operator, standing on the ground or on a platform or sitting, to actuate controls or carry out any other task

3.7
driver's station
position of the operator from where the driving of the machine is controlled

4 Safety requirements and/or protective/risk reduction measures

4.1 General

4.1.1 Principles

Machinery shall comply with the safety requirements and/or protective/risk reduction measures of this clause. In addition, the machine shall be designed according to the principles of relevant clauses of EN ISO 12100:2010 for hazards relevant but not significant, which are not dealt with by this document (e.g. burns).

4.1.2 Principles of safety integration

EN ISO 4254-1:2015, 4.1, 4.2, and Annex E[2)] apply.

---

2) Amendment A1 to EN ISO 4254-1:2015 is under preparation. It will include a new Annex E, Guidance for risk assessment and determination of performance levels for safety-related parts of control systems.

Documents
Document Sharing Hub
Full document details: BS EN 703:2021

4.1.3 Control systems

EN ISO 4254-1:2015, 4.5, 4.6, 4.19, 4.20, 5.1.3, 5.1.8 and 6.1 apply.

For safety and reliability of control systems, EN ISO 4254-1:2015, 4.5, 4.6, 4.12, 4.13, 4.14, 4.18, 4.19 and 4.20 apply.

4.1.4 Guards and protective devices

4.1.4.1 General

EN ISO 4254-1:2015, 4.2, 4.10 apply.

EN ISO 13857:2019, Table 1, Table 3, Table 4 and Table 6 as appropriate.

4.1.4.2 Moving transmission parts

Fixed guards to be opened or removed by the use of a tool and interlocking guards with or without guard locking for moving parts of the power transmission on shall comply with EN 15811:2014.

Unless otherwise specified in 4.4 to 4.7 of this document, moving parts involved in the process EN ISO 4254-1:2015, 4.2 and 4.10 apply.

4.1.4.3 Transmission of power between self-propelled machinery (or tractor) and recipient machinery

EN ISO 4254-1:2015, 6.4 applies.

4.1.4.4 Starting and stopping the engine

EN ISO 4254-1:2015, 5.1.8 applies.

4.1.5 Electricity supply, batteries

EN ISO 4254-1:2015, 4.12 and 5.3 apply.

For isolation of energy sources, see EN ISO 4254-1:2015, 5.3.2 and 6.4.

4.1.6 Extreme temperatures

EN ISO 4254-1:2015, 5.5 applies.

4.1.7 Fire and explosion

EN ISO 4254-1:2015, 4.1, 5.1.6 and 5.4 apply.

4.1.8 Vibrations

EN ISO 4254-1:2015, 4.4 applies.

4.1.9 Maintenance

Unless otherwise specified in 4.5.2 and 4.6.5 of this document, EN ISO 4254-1:2015, 4.8, 4.11, 4.15 and 4.17 apply.

See also Clause 6.1 regarding instructions for maintenance.

4.1.10 Work positions and operator's station

Operator stations shall comply with EN ISO 4254-1:2015, 4.7 and 5.1.

Other than operator stations shall comply with EN ISO 4254-1:2015, 4.8.

When provided, seats shall comply with EN ISO 4254-1:2015, 5.1.2.

Documents
Document Sharing Hub

Full document details: BS EN 703:2021

4.1.11 Uncontrolled movements

EN ISO 4254-1:2015, 4.9 and 4.5.2 apply.

4.1.12 Roll-over and tip-over

EN ISO 4254-1:2015, 5.7 apply.

4.1.13 Means of access

EN ISO 4254-1:2015, 4.7, 4.8 and 5.1 apply.

4.1.14 Falling or ejected objects or fluids

EN ISO 4254-1:2015, 4.13 applies.

4.2 Location of the manual controls

4.2.1 General

In addition to EN ISO 4254-1:2015, 4.5, the following requirements apply.

It shall not be possible for the operator, when inside the mixing and/or chopping chamber(s), to reach the manual controls.

The manual controls shall be located such that it is not possible for the operator to reach unguarded mobile working tools while actuating the control. This requirement is considered met for mounted machines when the distance between the manual controls and any unguarded mobile working tools in operation is more than 850 mm.

In the case of two-hand controls, they shall comply with EN ISO 13851:2019 and be positioned such that it is not possible to reach unguarded mobile working tools during the run-down time, in compliance with EN ISO 13855:2010.

For mounted, semi-mounted or trailed machines, when controls require actuation from the driver's station, these controls shall be designed so that the operator can reach them, for example by means of an adjustable position of the controls or controls that can be situated inside the tractor (including tractor in built controls).

Verification: shall be by measurement and inspection.

Where there is more than one control position, the control system shall be designed in such a way that the use of one of them precludes the use of the others, except for stop controls and emergency stops. Stop controls shall have priority over the start controls.

Mixing and/or chopping and distribution functions shall be controlled from the driver's station only or these functions shall be activated by a two-hand control on the machine.

4.2.2 Requirements for hold-to-run controls

The control for the activation and the lowering of the cutting and loading tools and of the loading door shall be of the hold-to-run type.

Documents
Document Sharing Hub
Full document details: BS EN 703:2021

4.2.3 Additional requirements for manual controls

The manual controls of powered cutting and loading tools (rotary and oscillating cutter or knives) as well as of the loading door shall be designed or guarded so that the tools and the loading door cannot move without intentional action (e.g. a manual control requiring two different actions to be operational, remote control box with protection rail around the manual controls).

Verification: shall be by inspection and functional test.

The location of the manual control(s) of cutting and loading tools or loading door shall be such that when the operator actuates these from the work station or the driver's station, there is visibility on the work area of cutting and loading tools or the loading door in accordance with 4.3.

Verification: shall be by inspection, measurement and function test in accordance with 4.3.

When the machine is travelling, it shall be possible to actuate controls for mixing and/or chopping and distribution only from the driver's station.

Verification: shall be by function test.

4.3 Visibility

4.3.1 For work area of the cutting, loading tools and loading door located at front of the machine

The visibility is considered to be adequate when the operator, from his driver's and work station, can see the work area of the cutting, loading tools and the loading door over their whole width, including any lateral entrapment zones. This work area extends from the highest working position to a height of 1 m or less from the ground when the machine is in its loading position and:

— for self-propelled machines, at 200 mm measured from the edge of the cutting and loading tools (see Figure 1).

When direct visibility is not achieved from the driver's station, machines with cutting and loading tools at the front of the machine shall be fitted with devices such as mirrors or closed circuit television (CCTV) which ensure indirect visibility.

Verification: shall be by measurement.

Verification is achieved with the tools in the raised position. The position of the operator's eye is determined as shown in Figure 1. A lateral displacement of the eye of the operator is allowed within ± 300 mm from the medium position.

Documents
Document Sharing Hub

Full document details: BS EN 703:2021

Dimensions in millimetres

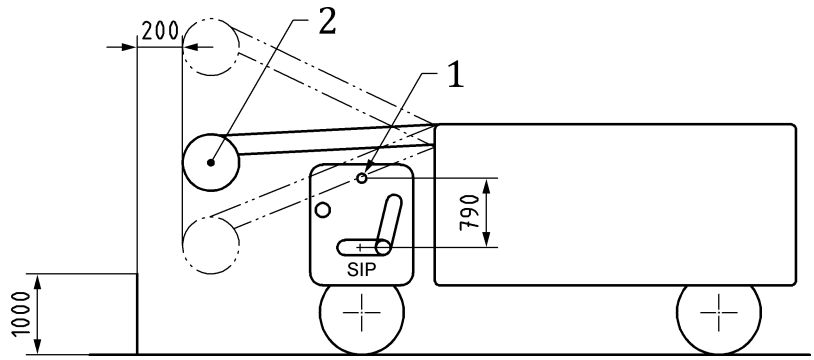

Key

1 eye position

2 cutting and loading tools

Figure 1 — Checking of the direct visibility for self-propelled machines

4.3.2 For work area of the cutting, loading tools and loading door located at rear of the machine

The visibility is considered to be adequate when the operator, from his driver's station, can see the work area of the cutting, loading tools and the loading door over their whole width, including any lateral entrapment zones (see *d*2 and *d*4 of Figure 2b and 2d). This work area extends from their highest position to a minimum height of 1,5 m from the ground when the machine is in its loading position and at 200 mm:

— measured from the edge of the cutting and loading tools for self-propelled machines;

— measured from the outer edge of the machine for trailed machines (see Figures 2a 2b 2c 2d).

When direct visibility is not achieved from the driver's station, a sound and/or light signal shall be emitted at actuation of the cutting and loading tools or the loading door. **Verification:** shall be by functional test.

When direct visibility is not achieved machines shall be equipped with devices to detect persons or shall be designed to allow indirect visibility at rearwards and ≥ 200 mm sideways (*d*4 in Figures 2b and 2d), on each side of the body, except for the areas hidden by the sides of the machine, as described in Figures 2a 2b 2c 2d, for example through the 2 mirrors of the tractor or driver's cab.

When the machine is equipped with a work station, the work station shall allow compliance with requirement of direct visibility.

Verification: shall be by measurement on an empty machine in loading position, with the cutting, loading tools in the raised position or the loading door slightly opened, as described in Figures 2a 2b 2c 2d.

The position of the operator's eye is determined as shown in Figure 3. A lateral displacement of the eye of the operator is allowed within ± 300 mm from the medium position.

Documents
Document Sharing Hub
Full document details: BS EN 703:2021

Dimensions in millimetres

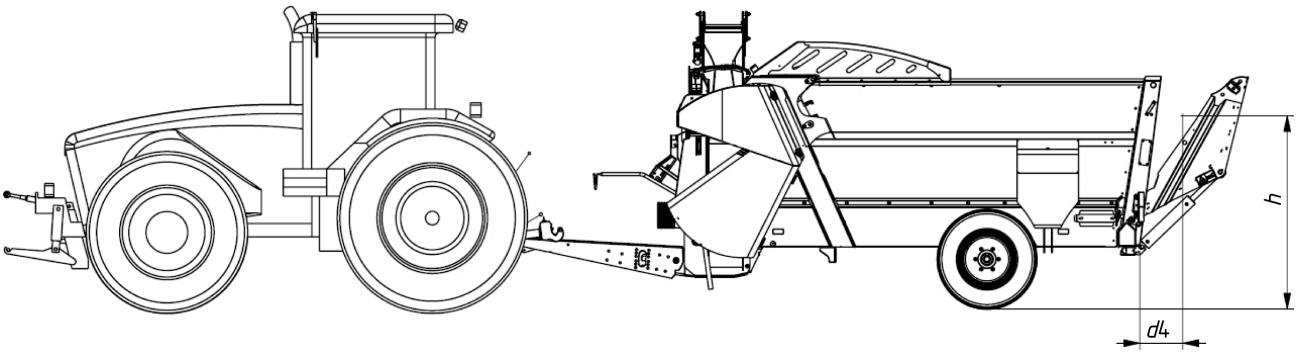

a) Checking of the visibility for trailed machines with loading door

Dimensions in millimetres

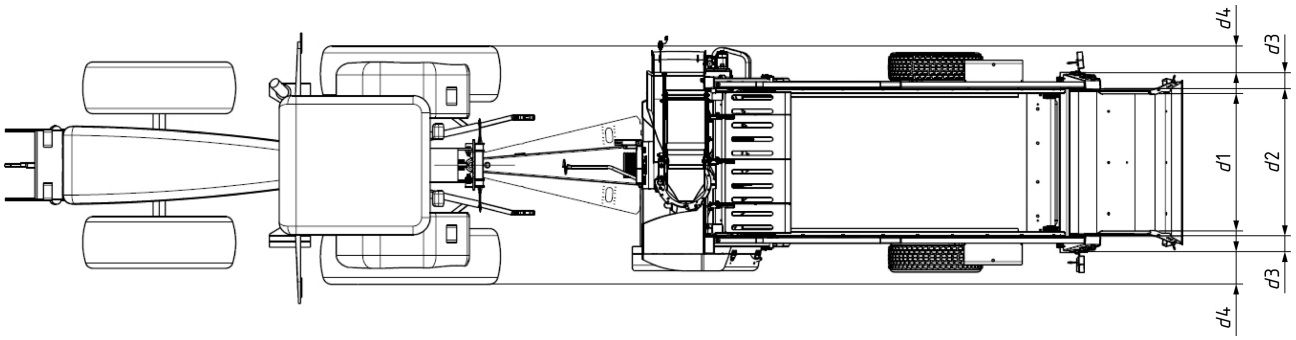

b) Checking of the visibility for trailed machines with loading door

Dimensions in millimetres

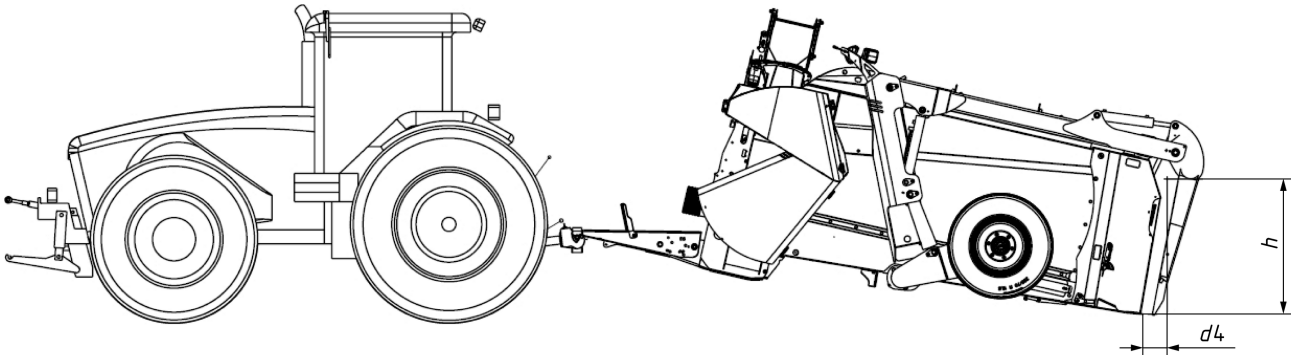

c) Checking of the visibility for trailed machines with cutting, loading tools

Documents
Document Sharing Hub
Full document details: BS EN 703:2021

Dimensions in millimetres

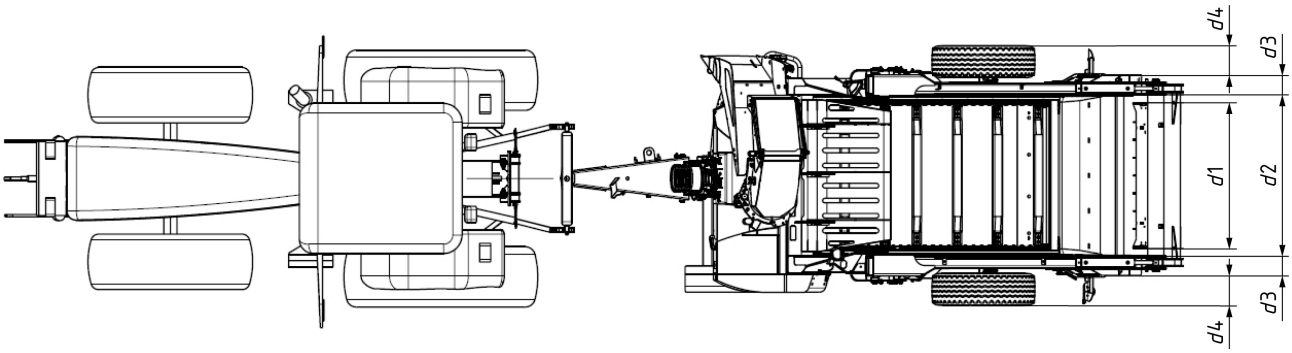

d) Checking of the visibility for trailed machines with cutting, loading tools

Key

h highest position to a minimum height of 1,5 m from the ground of the work area of the cutting, loading tools and the loading door

*d*1 width of the loading tools

*d*2 width of the visibility area - interior width of the machine

*d*3 excluded width of the visibility area (sides of the machine)

*d*4 width of the visibility area on sideways = 200 mm

Figure 2 — Checking of the visibility for trailed machines

Dimensions in millimetres

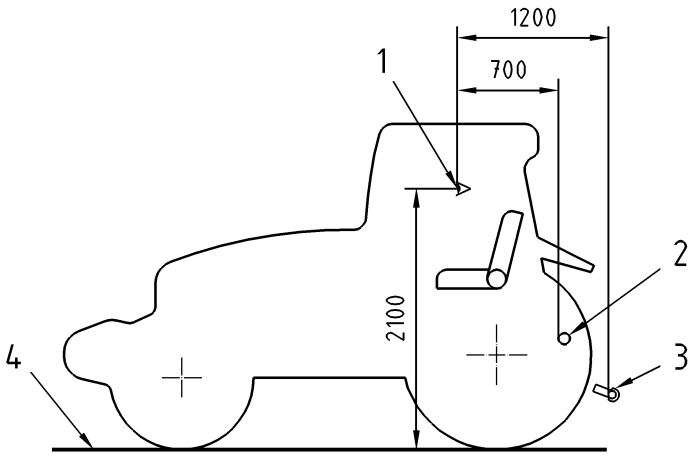

Key

1 eye position

2 clevis or hook

3 lower hitch point

4 ground

NOTE The hitch point is either 2 or 3.

Figure 3 — Determination of the eye position from the driver's station on the tractor

Documents
Document Sharing Hub
Full document details: BS EN 703:2021