BS EN IEC 60099-5:2018

BSI Standards Publication

Surge arresters

Part 5: Selection and application recommendations (IEC 60099-5:2018)

Documents
Document Sharing Hub

Full document details: BS EN IEC 60099-5:2018

National foreword

This British Standard is the UK implementation of EN IEC 60099-5:2018. It is identical to IEC 60099-5:2018. It supersedes BS EN 60099-5:2013, which is withdrawn.

The UK participation in its preparation was entrusted to Technical Committee PEL/37, Surge Arresters - High Voltage.

A list of organizations represented on this committee can be obtained on request to its secretary.

This publication does not purport to include all the necessary provisions of a contract. Users are responsible for its correct application.

© The British Standards Institution 2018
Published by BSI Standards Limited 2018

ISBN 978 0 580 94031 6

ICS 29.120.50; 29.240.10

Compliance with a British Standard cannot confer immunity from legal obligations.

This British Standard was published under the authority of the Standards Policy and Strategy Committee on 30 April 2018.

Amendments/corrigenda issued since publication

Date	Text affected

Documents
Document Sharing Hub

Full document details: BS EN IEC 60099-5:2018

EUROPEAN STANDARD

NORME EUROPÉENNE

EUROPÄISCHE NORM

EN IEC 60099-5

March 2018

ICS 29.120.50; 29.240.10

Supersedes EN 60099-5:2013

English Version

Surge arresters - Part 5: Selection and application recommendations (IEC 60099-5:2018)

Parafoudres - Partie 5: Recommandations pour le choix et l'utilisation (IEC 60099-5:2018)

Überspannungsableiter - Teil 5: Anleitung für die Auswahl und die Anwendung (IEC 60099-5:2018)

This European Standard was approved by CENELEC on 2018-02-23. CENELEC members are bound to comply with the CEN/CENELEC Internal Regulations which stipulate the conditions for giving this European Standard the status of a national standard without any alteration.

Up-to-date lists and bibliographical references concerning such national standards may be obtained on application to the CEN-CENELEC Management Centre or to any CENELEC member.

This European Standard exists in three official versions (English, French, German). A version in any other language made by translation under the responsibility of a CENELEC member into its own language and notified to the CEN-CENELEC Management Centre has the same status as the official versions.

CENELEC members are the national electrotechnical committees of Austria, Belgium, Bulgaria, Croatia, Cyprus, the Czech Republic, Denmark, Estonia, Finland, Former Yugoslav Republic of Macedonia, France, Germany, Greece, Hungary, Iceland, Ireland, Italy, Latvia, Lithuania, Luxembourg, Malta, the Netherlands, Norway, Poland, Portugal, Romania, Serbia, Slovakia, Slovenia, Spain, Sweden, Switzerland, Turkey and the United Kingdom.

European Committee for Electrotechnical Standardization
Comité Européen de Normalisation Electrotechnique
Europäisches Komitee für Elektrotechnische Normung

CEN-CENELEC Management Centre: Rue de la Science 23, B-1040 Brussels

© 2018 CENELEC All rights of exploitation in any form and by any means reserved worldwide for CENELEC Members.

Ref. No. EN IEC 60099-5:2018 E

AVA Documents Document Sharing Hub

Full document details: BS EN IEC 60099-5:2018

European foreword

The text of document 37/437/FDIS, future edition 3 of IEC 60099-5, prepared by IEC/TC 37 "Surge arresters" was submitted to the IEC-CENELEC parallel vote and approved by CENELEC as EN IEC 60099-5:2018.

The following dates are fixed:

• latest date by which the document has to be implemented at national level by publication of an identical national standard or by endorsement	(dop)	2018-11-23
• latest date by which the national standards conflicting with the document have to be withdrawn	(dow)	2021-02-23

This document supersedes EN 60099-5:2013.

Attention is drawn to the possibility that some of the elements of this document may be the subject of patent rights. CENELEC shall not be held responsible for identifying any or all such patent rights.

Endorsement notice

The text of the International Standard IEC 60099-5:2018 was approved by CENELEC as a European Standard without any modification.

Documents
Document Sharing Hub

Full document details: BS EN IEC 60099-5:2018

Annex ZA
(normative)

Normative references to international publications with their corresponding European publications

The following documents are referred to in the text in such a way that some or all of their content constitutes requirements of this document. For dated references, only the edition cited applies. For undated references, the latest edition of the referenced document (including any amendments) applies.

NOTE 1 Where an International Publication has been modified by common modifications, indicated by (mod), the relevant EN/HD applies.

NOTE 2 Up-to-date information on the latest versions of the European Standards listed in this annex is available here: www.cenelec.eu.

Publication	Year	Title	EN/HD	Year
IEC 60071-1	2006	Insulation co-ordination -- Part 1: Definitions, principles and rules	EN 60071-1	2006
+ A1	2010		+ A1	2010
IEC 60071-2	1996	Insulation co-ordination -- Part 2: Application guide	EN 60071-2	1997
IEC 60099-4	2004	Surge arresters -- Part 4: Metal-oxide surge arresters without gaps for a.c. systems	EN 60099-4	2004
+ A1	2006		+ A1	2006
+ A2	2009		+ A2	2009
IEC 60099-4	2014	Surge arresters - Part 4: Metal-oxide surge arresters without gaps for a.c. systems	EN 60099-4	2014
IEC 60099-6	2002	Surge arresters -- Part 6: Surge arresters containing both series and parallel gapped structures - Rated 52 kV and less	-	-
IEC 60099-8	2011	Surge arresters -- Part 8: Metal-oxide surge arresters with external series gap (EGLA) for overhead transmission and distribution lines of a.c. systems above 1 kV	EN 60099-8	2011
IEC 60507	-	Artificial pollution tests on high-voltage ceramic and glass insulators to be used on a.c. systems	EN 60507	-
IEC 62271-200	-	High-voltage switchgear and controlgear -- Part 200: AC metal-enclosed switchgear and controlgear for rated voltages above 1 kV and up to and including 52 kV	EN 62271-200	-
IEC 62271-203	-	High-voltage switchgear and controlgear -- Part 203: Gas-insulated metal-enclosed switchgear for rated voltages above 52 kV	EN 62271-203	-
IEC/TR 60071-4	-	Insulation co-ordination -- Part 4: Computational guide to insulation co-ordination and modelling of electrical networks	-	-
IEC/TS 60815-1	2008	Selection and dimensioning of high-voltage insulators intended for use in polluted conditions - Part 1: Definitions, information and general principles	-	-

Documents
Document Sharing Hub
Full document details: BS EN IEC 60099-5:2018

CONTENTS

FOREWORD 9
1 Scope 11
2 Normative references 11
3 Terms and definitions 12
4 General principles for the application of surge arresters 21
5 Surge arrester fundamentals and applications issues 22
5.1 Evolution of surge protection equipment 22
5.2 Different types and designs and their electrical and mechanical characteristics 23
5.2.1 General 23
5.2.2 Metal-oxide arresters without gaps according to IEC 60099-4 24
5.2.3 Metal-oxide surge arresters with internal series gaps according to IEC 60099-6 34
5.2.4 Externally gapped line arresters (EGLA) according to IEC 60099-8 36
5.2.5 Application considerations 39
6 Insulation coordination and surge arrester applications 52
6.1 General 52
6.2 Insulation coordination overview 52
6.2.1 General 52
6.2.2 IEC insulation coordination procedure 53
6.2.3 Overvoltages 53
6.2.4 Line insulation coordination: Arrester Application Practices 59
6.2.5 Substation insulation coordination: Arrester application practices 64
6.2.6 Insulation coordination studies 68
6.3 Selection of arresters 70
6.3.1 General 70
6.3.2 General procedure for the selection of surge arresters 70
6.3.3 Selection of line surge arresters, LSA 84
6.3.4 Selection of arresters for cable protection 93
6.3.5 Selection of arresters for distribution systems – special attention 95
6.3.6 Application and coordination of disconnectors 96
6.3.7 Selection of UHV arresters 98
6.4 Standard and special service conditions 99
6.4.1 Standard service conditions 99
6.4.2 Special service conditions 99
7 Surge arresters for special applications 103
7.1 Surge arresters for transformer neutrals 103
7.1.1 General 103
7.1.2 Surge arresters for fully insulated transformer neutrals 103
7.1.3 Surge arresters for neutrals of transformers with non-uniform insulation 103
7.2 Surge arresters between phases 104
7.2.1 General 104
7.2.2 6-arrester arrangement 104
7.2.3 4-arrester (Neptune) arrangement 104
7.3 Surge arresters for rotating machines 105
7.4 Surge arresters in parallel 106

AVA Documents
Document Sharing Hub

7.4.1 General ... 106
7.4.2 Combining different designs of arresters ... 107
7.5 Surge arresters for capacitor switching ... 107
7.6 Surge arresters for series capacitor banks ... 109
8 Asset management of surge arresters ... 110
8.1 General ... 110
8.2 Managing surge arresters in a power grid ... 110
8.2.1 Asset database ... 110
8.2.2 Technical specifications ... 110
8.2.3 Strategic spares ... 110
8.2.4 Transportation and storage ... 111
8.2.5 Commissioning ... 111
8.3 Maintenance ... 111
8.3.1 General ... 111
8.3.2 Polluted arrester housing ... 112
8.3.3 Coating of arrester housings ... 112
8.3.4 Inspection of disconnectors on surge arresters ... 112
8.3.5 Line surge arresters ... 112
8.4 Performance and diagnostic tools ... 112
8.5 End of life ... 113
8.5.1 General ... 113
8.5.2 GIS arresters ... 113
8.6 Disposal and recycling ... 113
Annex A (informative) Determination of temporary overvoltages due to earth faults ... 114
Annex B (informative) Current practice ... 118
Annex C (informative) Arrester modelling techniques for studies involving insulation coordination and energy requirements ... 119
C.1 Arrester models for impulse simulations ... 119
C.2 Application to insulation coordination studies ... 120
C.3 Summary of proposed arrester models to be used for impulse applications ... 120
Annex D (informative) Diagnostic indicators of metal-oxide surge arresters in service ... 122
D.1 General ... 122
D.1.1 Overview ... 122
D.1.2 Fault indicators ... 122
D.1.3 Disconnectors ... 122
D.1.4 Surge counters ... 122
D.1.5 Monitoring spark gaps ... 123
D.1.6 Temperature measurements ... 123
D.1.7 Leakage current measurements of gapless metal-oxide arresters ... 123
D.2 Measurement of the total leakage current ... 128
D.3 Measurement of the resistive leakage current or the power loss ... 129
D.3.1 General ... 129
D.3.2 Method A1 – Using the applied voltage signal as a reference ... 129
D.3.3 Method A2 – Compensating the capacitive component using a voltage signal ... 130
D.3.4 Method A3 – Compensating the capacitive component without using a voltage signal ... 131
D.3.5 Method A4 – Capacitive compensation by combining the leakage current of the three phases ... 131

AVA Documents
Document Sharing Hub
Full document details: BS EN IEC 60099-5:2018

D.3.6 Method B1 – Third order harmonic analysis ... 132
D.3.7 Method B2 – Third order harmonic analysis with compensation for harmonics in the voltage ... 133
D.3.8 Method B3 – First order harmonic analysis ... 133
D.3.9 Method C – Direct determination of the power losses ... 133
D.4 Leakage current information from the arrester manufacturer ... 133
D.5 Summary of diagnostic methods ... 135
Annex E (informative) Typical data needed from arrester manufacturers for proper selection of surge arresters ... 136
Annex F (informative) Typical maximum residual voltages for metal-oxide arresters without gaps according to IEC 60099-4 ... 137
Annex G (informative) Steepness reduction of incoming surge with additional line terminal surge capacitance ... 138
G.1 General ... 138
G.2 Steepness reduction factor ... 138
G.3 Equivalent capacitance associated with incoming surge fronts ... 140
G.3.1 General ... 140
G.3.2 Examples of incoming surge steepness change, f_S, using typical 550 kV & 245 kV circuit parameters ... 141
G.3.3 Change in coordination withstand voltage, U_{CW}, with steepness reduction, f_S: ... 142
G.4 EMTP & capacitor charging models for steepness change comparisons at line open terminal ... 142
G.5 Typical steepness (S_0= 1000 kV/µs), change comparisons with C_0 & C_S ... 143
G.6 Faster steepness (2000 kV/µs), change comparisons with C_O & C_S ... 145
Annex H (informative) Comparison of the former energy classification system based on line discharge classes and the present classification system based on thermal energy ratings for operating duty tests and repetitive charge transfer ratings for repetitive single event energies ... 147
H.1 General ... 147
H.2 Examples ... 150
Annex I (informative) Estimation of arrester cumulative charges and energies during line switching ... 155
I.1 Simplified method of estimating arrester line switching energies ... 155
I.1.1 Introduction ... 155
I.1.2 Simplified method calculation steps ... 156
I.1.3 Typical line surge impedances with bundled conductors ... 158
I.1.4 Prospective switching surge overvoltages ... 158
I.1.5 Use of IEC 60099-4:2009 to obtain values for surge impedance and prospective surge voltages ... 159
I.2 Example of charge and energy calculated using line discharge parameters ... 160
I.3 Arrester line switching energy examples ... 164
I.3.1 General ... 164
I.3.2 Case 1 – 145 kV ... 167
I.3.3 Case 2 – 242 kV ... 167
I.3.4 Case 3 – 362 kV ... 167
I.3.5 Case 4 – 420 kV ... 168
I.3.6 Case 5 – 550 kV ... 168
Annex J (informative) End of life and replacement of old gapped SiC-arresters ... 180
J.1 Overview ... 180
J.2 Design and operation of SiC-arresters ... 180

Documents
Document Sharing Hub
Full document details: BS EN IEC 60099-5:2018

J.3 Failure causes and aging phenomena ... 180
J.3.1 General ... 180
J.3.2 Sealing problems ... 180
J.3.3 Equalization of internal and external pressure and atmosphere ... 181
J.3.4 Gap electrode erosion ... 181
J.3.5 Ageing of grading components ... 182
J.3.6 Changed system conditions ... 182
J.3.7 Increased pollution levels ... 182
J.4 Possibility to check the status of the arresters ... 182
J.5 Advantages of planning replacements ahead ... 182
J.5.1 General ... 182
J.5.2 Improved reliability ... 183
J.5.3 Cost advantages ... 183
J.5.4 Increased safety requirements ... 183
J.6 Replacement issues ... 183
J.6.1 General ... 183
J.6.2 Establishing replacement priority ... 183
J.6.3 Selection of MO arresters for replacement installations ... 184
Bibliography ... 185

Figure 1 – Example of GIS arresters of three mechanical/one electrical column (middle) and one column (left) design and current path of the three mechanical/one electrical column design (right) ... 29
Figure 2 – Typical deadfront arrester ... 30
Figure 3 – Internally gapped metal-oxide surge arrester designs ... 35
Figure 4 – Components of an EGLA acc. to IEC 60099-8 ... 36
Figure 5 – Typical arrangement of a 420 kV arrester ... 41
Figure 6 – Examples of UHV and HV arresters with grading and corona rings ... 42
Figure 7 – Same type of arrester mounted on a pedestal (left), suspended from an earthed steel structure (middle) or suspended from a line conductor (right ... 43
Figure 8 – Installations without earth-mat (distribution systems) ... 44
Figure 9 – Installations with earth-mat (high-voltage substations) ... 45
Figure 10 – Definition of mechanical loads according to IEC 60099-4:2014 ... 47
Figure 11 – Distribution arrester with disconnector and insulating bracket ... 48
Figure 12 – Examples of good and poor connection principles for distribution arresters ... 50
Figure 13 – Typical voltages and duration example for differently earthed systems ... 54
Figure 14 – Typical phase-to-earth overvoltages encountered in power systems ... 55
Figure 15 – Arrester voltage-current characteristics ... 56
Figure 16 – Direct strike to a phase conductor with LSA ... 61
Figure 17 – Strike to a shield wire or tower with LSA ... 62
Figure 18 – Typical procedure for a surge arrester insulation coordination study ... 69
Figure 19 – Flow diagrams for standard selection of surge arrester ... 73
Figure 20 – Examples of arrester TOV capability ... 74
Figure 21 – Flow diagram for the selection of NGLA ... 87
Figure 22 – Flow diagram for the selection of EGLA ... 91
Figure 23 – Common neutral configurations ... 96

AVA Documents
Document Sharing Hub

Full document details: BS EN IEC 60099-5:2018

Figure 24 – Typical configurations for arresters connected phase-to-phase and phase-to-ground 105
Figure A.1 – Earth fault factor k on a base of X_0/X_1, for $R_1/X_1 = R_1 = 0$ 114
Figure A.2 – Relationship between R_0/X_1 and X_0/X_1 for constant values of earth fault factor k where $R_1 = 0$ 115
Figure A.3 – Relationship between R0/X1 and X0/X1 for constant values of earth fault factor k where $R_1 = 0{,}5\ X_1$ 115
Figure A.4 – Relationship between R_0/X_1 and X_0/X_1 for constant values of earth fault factor k where $R_1 = X_1$ 116
Figure A.5 – Relationship between R_0/X_1 and X_0/X_1 for constant values of earth fault factor k where $R_1 = 2X_1$ 116
Figure C.1 – Schematic sketch of a typical arrester installation 119
Figure C.2 – Increase in residual voltage as function of virtual current front time 120
Figure C.3 – Arrester model for insulation coordination studies – fast- front overvoltages and preliminary calculation (Option 1) 121
Figure C.4 – Arrester model for insulation coordination studies – fast- front overvoltages and preliminary calculation (Option 2) 121
Figure C.5 – Arrester model for insulation coordination studies – slow-front overvoltages 121
Figure D.1 – Typical leakage current of a non-linear metal-oxide resistor in laboratory conditions 124
Figure D.2 – Typical leakage currents of arresters in service conditions 125
Figure D.3 – Typical voltage-current characteristics for non-linear metal-oxide resistors 126
Figure D.4 – Typical normalized voltage dependence at +20 °C 126
Figure D.5 – Typical normalized temperature dependence at U_C 127
Figure D.6 – Influence on total leakage current by increase in resistive leakage current 128
Figure D.7 – Measured voltage and leakage current and calculated resistive and capacitive currents (V = 6,3 kV r.m.s) 130
Figure D.8 – Remaining current after compensation by capacitive current at U_C 131
Figure D.9 – Error in the evaluation of the leakage current third harmonic for different phase angles of system voltage third harmonic, considering various capacitances and voltage-current characteristics of non-linear metal-oxide resistors 132
Figure D.10 – Typical information for conversion to "standard" operating voltage conditions 134
Figure D.11 – Typical information for conversion to "standard" ambient temperature conditions 134
Figure G.1 – Surge voltage waveforms at various distances from strike location (0,0 km) due to corona 139
Figure G.2 – Case 1: EMTP Model: Thevenin equivalent source, line (Z,c) & substation bus (Z,c) & Cap(C_S) 142
Figure G.3 – Case 2: Capacitor Voltage charge via line Z: $u(t) = 2\times U_{surge} \times (1 - \exp[-t/(Z\times C])$ 143
Figure G.4 – EMTP model 143
Figure G.5 – Simulated surge voltages at the line-substation bus interface 144
Figure G.6 – Simulated Surge Voltages at the Transformer 145
Figure G.7 – EMTP model 145
Figure G.8 – Simulated surge voltages at the line-substation bus interface 146
Figure G.9 – Simulated surge voltages at the transformer 146

AVA Documents
Document Sharing Hub
Full document details: BS EN IEC 60099-5:2018

Figure H.1 – Specific energy in kJ per kV rating dependant on the ratio of switching impulse residual voltage (U_a) to the r.m.s. value of the rated voltage U_r of the arrester 148
Figure I.1 – Simple network used for Arrester Line Discharge Calculation and Testing according to IEC 60099-4:2009 155
Figure I.2 – Linearized arrester equation in the typical line switching current range (voltage values shown are for a 372 kV rated arrester used on a 420 kV system) 156
Figure I.3 – Graphical illustration of linearized line switching condition and arrester characteristic 157
Figure I.4 – Range of 2 % slow-front overvoltages at the receiving end due to line energization and re-energization 159
Figure I.5 – Arrester class 2 & 3 voltages calculated by EMTP calculations: U_{ps2} and U_{ps3} (V × 10^5) 162
Figure I.6 – Class 2 & 3 arrester currents calculated by EMTP studies: I_{ps2} and I_{ps3} (A) 162
Figure I.7 – Arrester Class 2 & 3 cumulative charges calculated by EMTP simulation: Q_{rs2} and Q_{rs3} (C) 163
Figure I.8 – Arrester Class 2 & 3 cumulative absorbed energies calculated by EMTP simulation: W_{s2} and W_{s3} (kJ/kV U_r) 163
Figure I.9 – Typical Line Reclosing Computer Simulation Network 164
Figure I.10 – Typical 550 kV Reclose Switching Overvoltage Profile along 480 km Line 165
Figure I.11 – IEC LD based charge transfer, Q_{rs} with varying arrester protective ratios 166
Figure I.12 – IEC LD based switching energy, W_{th} with varying arrester protective ratios 166
Figure I.13 – U_{ps} for 145 kV system simulation (V x 10^5) 170
Figure I.14 – I_{ps} for 145 kV system simulation (A) 170
Figure I.15 – 1 Cumulative charge (Q_{rs}) for 145 kV system simulation (C) 171
Figure I.16 – Cumulative energy (W_{th}) for 145 kV system simulation (kJ/kV U_r) 171
Figure I.17 – U_{ps} for 245 kV system simulation (V x 10^5) 172
Figure I.18 – I_{ps} for 245 kV system simulation (A) 172
Figure I.19 – Cumulative charge (Q_{rs}) for 245 kV system simulation (C) 173
Figure I.20 – Cumulative energy (W_{th}) for 245 kV system simulation (kJ/kV U_r) 173
Figure I.21 – U_{ps} for 362 kV system simulation (V x 10^5) 174
Figure I.22 – I_{ps} for 362 kV system simulation (A) 174
Figure I.23 – Cumulative charge (Q_{rs}) for 362 kV system simulation (C) 175
Figure I.24 – Cumulative energy (W_{th}) for 362 kV system simulation (kJ/kV U_r) 175
Figure I.25 – U_{ps} for 420 kV system simulation (V x 10^5) 176
Figure I.26 – I_{ps} for 420 kV system simulation (A) 176
Figure I.27 – Cumulative charge (Q_{rs}) for 420 kV system simulation (C) 177
Figure I.28 – Cumulative energy (W_{th}) for 420 kV system simulation (kJ/kV U_r) 177
Figure I.29 – U_{ps} for 550 kV system simulation (V x 10^5) 178
Figure I.30 – I_{ps} for 550 kV system simulation (A) 178
Figure I.31 – Cumulative charge (Q_{rs}) for 550 kV system simulation (C) 179
Figure I.32 – Cumulative energy (W_{th}) for 550 kV system simulation (kJ/kV U_r) 179
Figure J.1 – Internal SiC-arrester stack 181

Table 1 – Minimum mechanical requirements (for porcelain-housed arresters) 40

AVA Documents
Document Sharing Hub
Full document details: BS EN IEC 60099-5:2018

Table 2 – Arrester classification 78
Table 3 – Definition of factor A in formulas (14 and 15) for various overhead lines 82
Table 4 – Examples for protective zones calculated by formula (16) for open-air substations 83
Table 5 – Example of the condition for calculating lightning current duty of EGLA in 77 kV transmission lines 90
Table 6 – Probability of insulator flashover in Formula (18) 93
Table D.1 – Summary of diagnostic methods 135
Table D.2 – Properties of on-site leakage current measurement methods 135
Table E.1 – Arrester data needed for the selection of surge arresters 136
Table F.1 – Residual voltages for 20 000 A and 10 000 A arresters in per unit of rated voltage 137
Table F.2 – Residual voltages for 5 000 A, and 2 500 A arresters in per unit of rated voltage 137
Table G.1 – C_s impact on steepness ratio f_s and steepness S_n 141
Table G.2 – Change in coordination withstand voltage, U_{cw} 142
Table H.1 – Peak currents for switching impulse residual voltage test 147
Table H.2 – Parameters for the line discharge test on 20 000 A and 10 000 A arresters 148
Table H.3 – Comparison of the classification system according to IEC 60099-4:2009 and to IEC 6099-4 2014 149
Table I.1 – Typical Arrester Switching (U_{ps} vs I_{ps}) Characteristics 156
Table I.2 – Typical line surge impedances (Z_s) with single and bundled conductors 158
Table I.3 – Line Parameters Prescribed by IEC 60099-4:2009 Line Discharge Class Tests 159
Table I.4 – Line surge impedances and prospective surge voltages derived from line discharge tests parameters of IEC 60099-4:2009 for different system voltages and arrester ratings 160
Table I.5 – Comparison of energy and charge calculated by simplified method with values calculated by EMTP simulation – Base parameters from Table I.4, used for simplified method and for EMTP simulation 161
Table I.6 – Comparison of energy and charge calculated by simplified method with values calculated by EMTP simulation – Calculations using simplified method 161
Table I.7 – Comparison of energy and charge calculated by simplified method with values calculated by EMTP simulation – I.5.(c) Results from EMTP studies 161
Table I.8 – Results of calculations using the ndifferent methods described for different system voltages and arrester selection 169

Documents
Document Sharing Hub
Full document details: BS EN IEC 60099-5:2018

INTERNATIONAL ELECTROTECHNICAL COMMISSION

SURGE ARRESTERS –

Part 5: Selection and application recommendations

FOREWORD

1) The International Electrotechnical Commission (IEC) is a worldwide organization for standardization comprising all national electrotechnical committees (IEC National Committees). The object of IEC is to promote international co-operation on all questions concerning standardization in the electrical and electronic fields. To this end and in addition to other activities, IEC publishes International Standards, Technical Specifications, Technical Reports, Publicly Available Specifications (PAS) and Guides (hereafter referred to as "IEC Publication(s)"). Their preparation is entrusted to technical committees; any IEC National Committee interested in the subject dealt with may participate in this preparatory work. International, governmental and non-governmental organizations liaising with the IEC also participate in this preparation. IEC collaborates closely with the International Organization for Standardization (ISO) in accordance with conditions determined by agreement between the two organizations.
2) The formal decisions or agreements of IEC on technical matters express, as nearly as possible, an international consensus of opinion on the relevant subjects since each technical committee has representation from all interested IEC National Committees.
3) IEC Publications have the form of recommendations for international use and are accepted by IEC National Committees in that sense. While all reasonable efforts are made to ensure that the technical content of IEC Publications is accurate, IEC cannot be held responsible for the way in which they are used or for any misinterpretation by any end user.
4) In order to promote international uniformity, IEC National Committees undertake to apply IEC Publications transparently to the maximum extent possible in their national and regional publications. Any divergence between any IEC Publication and the corresponding national or regional publication shall be clearly indicated in the latter.
5) IEC itself does not provide any attestation of conformity. Independent certification bodies provide conformity assessment services and, in some areas, access to IEC marks of conformity. IEC is not responsible for any services carried out by independent certification bodies.
6) All users should ensure that they have the latest edition of this publication.
7) No liability shall attach to IEC or its directors, employees, servants or agents including individual experts and members of its technical committees and IEC National Committees for any personal injury, property damage or other damage of any nature whatsoever, whether direct or indirect, or for costs (including legal fees) and expenses arising out of the publication, use of, or reliance upon, this IEC Publication or any other IEC Publications.
8) Attention is drawn to the Normative references cited in this publication. Use of the referenced publications is indispensable for the correct application of this publication.
9) Attention is drawn to the possibility that some of the elements of this IEC Publication may be the subject of patent rights. IEC shall not be held responsible for identifying any or all such patent rights.

International Standard IEC 60099-5 has been prepared by IEC technical committee 37: Surge arresters.

This third edition cancels and replaces the second edition published in 2013. This edition constitutes a technical revision.

This edition includes the following significant technical changes with respect to the previous edition regarding the new surge arrester classification introduced in IEC 60099-4:2014:

a) Expanded discussion of comparison between the old and new classification and how to calculate or estimate the corresponding charge for different stresses.
b) New annexes dealing with:
   – Comparison between line discharge classes and charge classification
   – Estimation of arrester cumulative charges and energies during line switching

Documents
Document Sharing Hub

Full document details: BS EN IEC 60099-5:2018

The text of this standard is based on the following documents:

FDIS	Report on voting
37/437/FDIS	37/439/RVD

Full information on the voting for the approval of this standard can be found in the report on voting indicated in the above table.

This publication has been drafted in accordance with the ISO/IEC Directives, Part 2.

A list of all parts in the IEC 60099 series, published under the general title *Surge arresters*, can be found on the IEC website.

The committee has decided that the contents of this publication will remain unchanged until the stability date indicated on the IEC website under "http://webstore.iec.ch" in the data related to the specific publication. At this date, the publication will be

- reconfirmed,
- withdrawn,
- replaced by a revised edition, or
- amended.

A bilingual version of this publication may be issued at a later date.

IMPORTANT – The 'colour inside' logo on the cover page of this publication indicates that it contains colours which are considered to be useful for the correct understanding of its contents. Users should therefore print this document using a colour printer.

Documents
Document Sharing Hub

Full document details: BS EN IEC 60099-5:2018

SURGE ARRESTERS –

Part 5: Selection and application recommendations

1 Scope

This part of IEC 60099 provides information, guidance, and recommendations for the selection and application of surge arresters to be used in three-phase systems with nominal voltages above 1 kV. It applies to gapless metal-oxide surge arresters as defined in IEC 60099-4, to surge arresters containing both series and parallel gapped structure – rated 52 kV and less as defined in IEC 60099-6 and metal-oxide surge arresters with external series gap for overhead transmission and distribution lines (EGLA) as defined in IEC 60099-8. In Annex J, some aspects regarding the old type of SiC gapped arresters are discussed.

Surge arrester residual voltage is a major parameter to which most users have paid a lot of attention to when selecting the type and rating. Typical maximum residual voltages are given in Annex F. It is likely, however, that for some systems, or in some countries, the requirements on system reliability and design are sufficiently uniform, so that the recommendations of the present standard may lead to the definition of narrow ranges of arresters. The user of surge arresters will, in that case, not be required to apply the whole process introduced here to any new installation and the selection of characteristics resulting from prior practice may be continued.

Annexes H and I present comparisons and calculations between old line discharge classification and new charge classification.

2 Normative references

The following documents are referred to in the text in such a way that some or all of their content constitutes requirements of this document. For dated references, only the edition cited applies. For undated references, the latest edition of the referenced document (including any amendments) applies.

IEC 60071-1:2006, *Insulation co-ordination – Part 1: Definitions, principles and rules*
IEC 60071-1:2006/AMD1:2010

IEC 60071-2:1996, *Insulation co-ordination – Part 2: Application guide*

IEC TR 60071-4, *Insulation co-ordination – Part 4: Computational guide to insulation co-ordination and modelling of electrical networks*

IEC 60099-4:2009, *Surge arresters – Part 4: Metal-oxide surge arresters without gaps for a.c. systems*

IEC 60099-4:2014, *Surge arresters – Part 4: Metal-oxide surge arresters without gaps for a.c. systems*

IEC 60099-6:2002, *Surge arresters – Part 6: Surge arresters containing both series and parallel gapped structures – Rated 52 kV and less*

IEC 60099-8:2011, *Surge arresters – Part 8: Metal-oxide surge arresters with external series gap (EGLA) for overhead transmission and distribution lines of a.c. systems above 1 kV*

AVA Documents
Document Sharing Hub

Full document details: BS EN IEC 60099-5:2018

IEC 60507, *Artificial pollution tests on high-voltage ceramic and glass insulators to be used on a.c. systems*

IEC TS 60815-1:2008, *Selection and dimensioning of high-voltage insulators intended for use in polluted conditions – Part 1: Definitions, information and general principles*

IEC 62271-200, *High-voltage switchgear and controlgear – Part 200: AC metal-enclosed switchgear and controlgear for rated voltages above 1 kV and up to and including 52 kV*

IEC 62271-203, *High-voltage switchgear and controlgear – Part 203: Gas-insulated metal-enclosed switchgear for rated voltages above 52 kV*

3 Terms and definitions

For the purposes of this document, the following terms and definitions apply.

ISO and IEC maintain terminological databases for use in standardization at the following addresses:

- IEC Electropedia: available at http://www.electropedia.org/
- ISO Online browsing platform: available at http://www.iso.org/obp

NOTE These terms follow standard definitions as close as possible, but are not in all cases exact citations of definitions in other IEC standards.

3.1
arrester – dead-front type, dead-front arrester
arrester assembled in a shielded housing providing system insulation and conductive earth shield, intended to be installed in an enclosure for the protection of underground and pad mounted distribution equipment and circuits

Note 1 to entry: Most dead-front arresters are load-break arresters.

Note 2 to entry: The use of dead-front arresters is common in the USA.

3.2
arrester disconnector
device for disconnecting an arrester from the system in the event of arrester failure, to prevent a persistent fault on the system and to give visible indication of the failed arrester

Note 1 to entry: Clearing of the fault current through the arrester during disconnection generally is not a function of the device.

3.3
arrester – liquid-immersed type
arrester designed to be immersed in an insulating liquid

3.4
arrester – separable type, separable arrester
arrester assembled in an insulated or screened housing providing system insulation, intended to be installed in an enclosure for the protection of distribution equipment and systems

Note 1 to entry: Electrical connection may be made by sliding contact or by bolted devices; however, all separable arresters are dead-break arresters.

Note 2 to entry: The use of separable arresters is common in Europe.

Documents
Document Sharing Hub
Full document details: BS EN IEC 60099-5:2018

3.5
back flashover rate
BFOR
characteristics of an overhead line or system with respect to the number of back flashovers typically given per 100 km and year

3.6
bending moment
horizontal force acting on the arrester housing multiplied by the vertical distance between the mounting base (lower level of the flange) of the arrester housing and the point of application of the force

3.7
continuous current of an arrester
current flowing through the arrester when energized at the continuous operating voltage

Note 1 to entry: The continuous current, which consists of a resistive and a capacitive component, may vary with temperature, stray capacitance and external pollution effects. The continuous current of a test sample may, therefore, not be the same as the continuous current of a complete arrester.

Note 2 to entry: The continuous current is, for comparison purposes, expressed either by its r.m.s. or peak value.

3.8
continuous operating voltage of an arrester
U_c
designated permissible r.m.s. value of power-frequency voltage that may be applied continuously between the arrester terminals in accordance with IEC 60099-4 and 60099-6

3.9
dead-break arrester
arrester which can be connected and disconnected from the circuit only when the circuit is de-energized

3.10
discharge current of an arrester
impulse current which flows through the arrester

3.11
disruptive discharge
phenomenon associated with the failure of insulation under electric stress, which include a collapse of voltage and the passage of current

Note 1 to entry: The term applies to electrical breakdowns in solid, liquid and gaseous dielectric, and combinations of these.

Note 2 to entry: A disruptive discharge in a solid dielectric produces permanent loss of electric strength. In a liquid or gaseous dielectric, the loss may be only temporary.

3.12
externally gapped line arresters
EGLA
a line surge arrester designed with an external spark gap in series with a SVU part, defined in 3.57, to protect the insulator assembly from lightning caused fast-front overvoltages only

Note 1 to entry: This is accomplished by raising the sparkover level of the external series gap to a level that isolates the arrester from power frequency overvoltages and from the worst case slow-front overvoltages due to switching and fault events expected on the line to which it is applied.

Documents
Document Sharing Hub
Full document details: BS EN IEC 60099-5:2018

3.13
fast-front overvoltage
FFO
transient overvoltage usually unidirectional, with time to peak between 0,1 μs to 20 μs, and tail duration < 300 μs

3.14
fault indicator
device intended to provide an indication that the arrester is faulty and which does not disconnect the arrester from the system

3.15
flashover
disruptive discharge over a solid surface

3.16
flashover rate
FOR
characteristics of an overhead line or system with respect to total number of flashovers typically given per 100 km and year

3.17
follow current
the current immediately following an impulse through an EGLA with the power frequency voltage as the source

Note 1 to entry: The external series gap shall be able to interrupt follow current due to external leakage current on a polluted SVU as well as due to internal resistive current through the non-linear metal oxide resistors; that is, the performance of the EGLA under polluted conditions is introduced by the gap resealing performance under wet and polluted condition, and it is verified by the follow current interruption test.

3.18
follow current of an arrester
the current from the connected power source which flows through an arrester following the passage of discharge current

3.19
gas-insulated metal enclosed surge arrester
GIS-arrester
gas-insulated metal-enclosed metal-oxide surge arrester without any integrated series or parallel spark gaps, filled with gas other than air and used in gas-insulated switchgears

Note 1 to entry: The gas pressure is normally higher than 1 bar = 10^5 Pa.

3.20
grading current
current flowing through the arrester while a power frequency voltage is applied

3.21
grading ring of an arrester
metal part, usually circular in shape, mounted to modify electro-statically the voltage distribution along the arrester

3.22
high current impulse
slightly different definitions are used in different IEC 60099 arrester standards; they are repeated here for reference:

IEC 60099-4, IEC 60099-6 & IEC 60099-9: peak value of discharge current having a 4/10 impulse shape which is used to test the stability of the arrester on direct lightning strokes

AVA Documents
Document Sharing Hub
Full document details: BS EN IEC 60099-5:2018

IEC 60099-8: peak value of discharge current having a 4/10 or 2/20 impulse shape, which is used to test the withstand capability of the SVU on extreme lightning occasions

3.23
highest voltage for equipment
U_m
highest value of the phase-to-phase voltage (r.m.s. value) for which the equipment is designed in respect of its insulation as well as other characteristics which relate to this voltage in the relevant equipment standards

Note 1 to entry: Under normal service conditions specified by the relevant apparatus committee this voltage can be applied continuously to the equipment.

3.24
highest voltage of a system
U_s
highest value of the phase-to-phase operating voltage (r.m.s. value) which occurs under normal operating conditions at any time and at any point in the system

3.25
impulse protective levels of an arrester tested in accordance with IEC 60099-6 – fast-front protective level
highest of either the steep current residual voltage or the front-of-wave impulse sparkover voltage at I_n

3.26
impulse protective levels of an arrester tested in accordance with IEC 60099-6 – standard lightning impulse protective level
highest of the residual voltage at nominal discharge current or 1,2/50 lightning impulse sparkover voltage at I_n

3.27
impulse protective levels of an arrester tested in accordance with IEC 60099-6 – switching impulse protective level
highest of either the maximum residual voltage for the specified switching current or the specified switching impulse sparkover voltage

3.28
impulse
unidirectional wave of voltage or current which, without appreciable oscillations, rises rapidly to a maximum value and falls, usually less rapidly, to zero with small, if any, excursions of opposite polarity

Note 1 to entry: The parameters which define a voltage or current impulse are polarity, peak value, front time and time to half-value on the tail.

3.29
impulse sparkover voltage-time curve
curve which relates the impulse sparkover of the voltage to the time to sparkover

3.30
insulation coordination
selection of the dielectric strength of equipment in relation to the operating voltages and overvoltages which can appear on the system for which the equipment is intended and taking into account the service environment and the characteristics of the available preventing and protective devices

Documents
Document Sharing Hub

Full document details: BS EN IEC 60099-5:2018

3.31
lightning current impulse
8/20 current impulse with limits on the adjustment of equipment such that the measured values are from 7 μs to 9 μs for the virtual front time and from 18 μs to 22 μs for the time to half-value on the tail

Note 1 to entry: The time to half-value on the tail is not critical and may have any tolerance during the residual voltage type tests (see IEC 60099-4:2014, 8.3.3).

3.32
lightning [or switching] impulse protective level
U_{pl} (LIPL) (or U_{ps} (SIPL))
maximum peak voltage on the terminals of a surge arrester subjected to lightning (or switching) impulses under specific conditions

3.33
lightning impulse withstand voltage
LIWV
standard rated lightning impulse withstand voltage of an equipment or insulation configuration

3.34
line surge arresters
LSA
type of arrester that is applied to overhead lines of power systems to reduce the risk of insulator flashover during lightning overvoltages

Note 1 to entry: This is not generally used to protect the insulator from other types of transients such as switching surges.

3.35
load-break arrester
arrester which can be connected and disconnected when the circuit is energized

3.36
mean breaking load
MBL
average breaking load for porcelain or cast resin-housed arresters determined from tests

3.37
metal-oxide surge arrester with gapped structures
arrester having non-linear metal-oxide resistors connected in series and/or in parallel with any internal series or shunt spark gaps

3.38
nominal discharge current of an arrester
I_n
peak value of lightning current impulse which is used to classify an arrester in IEC 60099-4, 60099-6, and 60099-8

3.39
nominal voltage of a system
U_n
suitable approximate value of voltage used to identify a system

3.40
non gapped line arresters
NGLA
line surge arrester designed without any external gapped structures to protect the line insulator assembly from lightning caused fast-front overvoltages

Documents
Document Sharing Hub
Full document details: BS EN IEC 60099-5:2018

Note 1 to entry: It may also protect the line insulators against switching surges if so selected.

Note 2 to entry: NGLA are generally equipped with a disconnector device that facilitates fast reclosing in case of an arrester overloading.

3.41
non-linear metal-oxide resistor
part of the surge arrester which, by its non-linear voltage versus current characteristics, acts as a low resistance to overvoltages, thus limiting the voltage across the arrester terminals, and as a high resistance at normal power-frequency voltage

3.42
polymer-housed arrester
arrester using polymeric and composite materials for housing, with fittings

Note 1 to entry: Designs with an enclosed gas volume are possible. Sealing may be accomplished by use of the polymeric material itself or by a separate sealing system.

3.43
porcelain-housed arrester
arrester using porcelain as housing material, with fittings and sealing systems

3.44
power-frequency withstand voltage versus time characteristic of an arrester
power-frequency withstand voltage versus time characteristic shows the maximum time durations for which corresponding power-frequency voltages may be applied to arresters without causing damage or thermal instability, under specified conditions in accordance with IEC 60099-4

3.45
protective characteristics of an arrester tested in accordance with IEC 60099-4:2014
combination of the following:

a) residual voltage for steep current impulse according to 8.3.1 of IEC 60099-4:2014;

b) residual voltage versus discharge current characteristic for lightning impulses according to 8.3.2 of IEC 60099-4:2014

Note 1 to entry: The lightning impulse protection level of the arrester is the maximum residual voltage for the nominal discharge current.

c) residual voltage for switching impulse according to 8.3.3 of IEC 60099-4:2014;

Note 2 to entry: The switching impulse protection level of the arrester is the maximum residual voltage at the specified switching impulse currents.

3.46
protective characteristics of an arrester tested in accordance with IEC 60099-6
combination of the following:

a) residual voltage for steep current impulse and front-of-wave spark-over according to 7.3.1 and 8.3.6.2 of IEC 60099-6:2002;

b) residual voltage versus discharge current characteristic for lightning impulses and the 1,2/50 impulse spark-over according to 7.3.2 and 8.3.7.2 of IEC 60099-6:2002;

c) residual voltage for switching impulse and the switching impulse sparkover according to 7.3.3 and 8.3.8.2 of IEC 60099-6:2002

3.47
rated frequency of an arrester
frequency of the power system on which the arrester is designed to be used

Documents
Document Sharing Hub

Full document details: BS EN IEC 60099-5:2018

3.48
rated voltage of an arrester
U_r
maximum permissible r.m.s. value of power frequency voltage between its terminals at which it is designed to operate correctly under temporary overvoltage conditions as established in the operating duty tests of IEC 60099-4 and 60099-6

Note 1 to entry: The rated voltage is used as a reference parameter for the specification of operating characteristics.

3.49
reference current of an arrester
peak value (the higher peak value of the two polarities if the current is asymmetrical) of the resistive component of a power-frequency current used to determine the reference voltage of the arrester

Note 1 to entry: The reference current will be high enough to make the effects of stray capacitances at the measured reference voltage of the arrester units (with designed grading system) negligible and is to be specified by the manufacturer.

Note 2 to entry: Depending on the nominal discharge current and/or line discharge class of the arrester, the reference current will be typically in the range of 0,05 mA to 1,0 mA per square centimetre of MO resistor area for single column arresters.

3.50
reference voltage of an arrester
U_{ref}
peak value of power-frequency voltage divided by √2 which is applied to the arrester to obtain the reference current

Note 1 to entry: The reference voltage of a multi-unit arrester is the sum of the reference voltages of the individual units.

3.51
repetitive charge transfer rating
Q_{rs}
maximum specified charge transfer capability of an arrester, in the form of a single event or group of surges that may be transferred through an arrester without causing mechanical failure or unacceptable electrical degradation to the MO resistors

Note 1 to entry: The charge is calculated as the absolute value of current integrated over time. For the purpose of this standard this is the charge that is accumulated in a single event or group of surges lasting for not more than 2 s and which may be followed by a subsequent event at a time interval not shorter than 60 s.

3.52
residual voltage of an arrester
U_{res}
peak value of voltage that appears between the terminals of an arrester during the passage of discharge current

Note 1 to entry: The term "discharge voltage" is used in some countries.

3.53
residual voltage of EGLA
peak value of voltage that appears across the terminal-to-terminal length of the EGLA including the series gaps and connection leads during the passage of discharge current

3.54
routine tests
tests made on each arrester, or on parts and materials, as required, ensuring that the product meets the design specifications

Documents
Document Sharing Hub
Full document details: BS EN IEC 60099-5:2018

3.55
self-restoring insulation
insulation which, after a short time, completely recovers its insulating properties after a disruptive discharge during test

3.56
series gap
intentional gap(s), between spaced electrodes in series with one or more metal-oxide resistors, across which all or part of the imparted terminal voltage appears

3.57
series varistor unit
SVU
non-linear metal oxide resistor part, contained in a housing, which must be connected with an external series gap to construct a complete EGLA; the SVU may include several units

3.58
shielding failure flashover rate
SFFOR
characteristics of an overhead line with respect to the number of shielding failures leading to flashover typically given per 100 km and year

3.59
shielding failure rate
SFR
characteristics of an overhead line with respect to the number of shielding failures typically given per 100 km and year

3.60
shunt gap
intentional gap(s), between spaced electrodes, that is electrically in parallel with one or more metal-oxide resistors

3.61
slow-front overvoltage
SFO
transient overvoltage usually unidirectional, with time to peak between 20 μs to 5 000 μs, and tail duration ≤ 20 ms

3.62
sparkover of an arrester
disruptive discharge between the electrodes of the gaps of an arrester

3.63
specified long-term load
SLL
force perpendicular to the longitudinal axis of an arrester, allowed to be continuously applied during service without causing any mechanical damage to the arrester

3.64
specified short-term load
SSL
greatest force perpendicular to the longitudinal axis of an arrester, allowed to be applied during service for short periods and for relatively rare events (for example, short-circuit current loads, very high wind loads or seismic loads) without causing any mechanical damage to the arrester

Note 1 to entry: For seismic load an even higher load than the SSL may be considered.

Documents
Document Sharing Hub

Full document details: BS EN IEC 60099-5:2018

3.65
steep current impulse
current impulse with a virtual front time of 1 μs with limits in the adjustment of equipment such that the measured values are from 0,9 μs to 1,1 μs and the virtual time to half-value on the tail is no longer than 20 μs

3.66
surface current of SVU
current that flows on the surface of the SVU

3.67
switching impulse withstand voltage
SIWV
standard rated switching impulse withstand voltage of an equipment or insulation configuration

3.68
switching surge flashover rate SSFOR
characteristics of an overhead line with respect to the number of switching surges leading to flashover typically given per 100 km and year

3.69
temporary overvoltage
TOV
power frequency overvoltage of relatively long duration

Note 1 to entry: The overvoltage may be undamped or weakly damped. In some cases its frequency may be several times lower or higher than power frequency.

3.70
terminal line force
force perpendicular to the longitudinal axis of the arrester measured at the centre line of the arrester

3.71
thermal charge transfer rating
Q_{th}
maximum specified charge that may be transferred through an arrester or arrester section within 3 minutes in a thermal recovery test without causing a thermal runaway

Note 1 to entry: This rating is verified by the operating duty type test.

3.72
thermal energy rating
W_{th}
maximum specified energy, given in kJ/kV of U_r, that may be injected into an arrester or arrester section within 3 minutes in a thermal recovery test without causing a thermal runaway

Note 1 to entry: This rating is verified by the operating duty type test.

3.73
thermal runaway of an arrester
situation when the sustained power loss of an arrester exceeds the thermal dissipation capability of the housing and connections, leading to a cumulative increase in the temperature of the resistor elements culminating in failure

Documents
Document Sharing Hub
Full document details: BS EN IEC 60099-5:2018

3.74
thermal stability of an arrester
state of an arrester if, after an operating duty causing temperature rise, the temperature of the resistor elements decreases with time when the arrester is energized at specified continuous operating voltage and at specified ambient conditions

3.75
time to sparkover of an arrester
the time interval between virtual origin and the instant of sparkover of the arrester expressed in microseconds

3.76
torsional loading
each horizontal force at the top of a vertically mounted arrester housing which is not applied to the longitudinal axis of the arrester

3.77
transient overvoltage
short-duration overvoltage of few milliseconds or less, oscillatory or non-oscillatory, usually highly damped

Note 1 to entry: Transient overvoltages may be immediately followed by temporary overvoltages. In such cases the two overvoltages are considered as separate events.

3.78
type tests
design tests
tests which are made upon the completion of the development of a new arrester design to establish representative performance and to demonstrate compliance with the relevant standard

Note 1 to entry: Once made, these tests need not be repeated unless the design is changed so as to modify its performance. In such a case, only the relevant tests need be repeated.

3.79
unit of an arrester
completely housed part of an arrester which may be connected in series and/or in parallel with other units to construct an arrester of higher voltage and/or current rating

3.80
very-fast-front overvoltage
VFFO
transient overvoltage usually unidirectional, with time to peak $\leq$ 0,1 μs, and with or without superimposed oscillations at frequency 30 kHz $< f <$ 100 MHz

4 General principles for the application of surge arresters

The principle of insulation coordination for an electricity system is given in IEC 60071-1 and IEC 60071-2. Basically the insulation coordination process represents a risk management aiming to ensure the safe, reliable and economic design and operation of high voltage electricity networks and substations. The use of surge arresters helps to achieve a system and equipment insulation level while still maintaining an acceptable risk and the best economy of scale.

The introduction of analytical modelling and simulation of power system transients further optimise the equipment insulation level. The selection of surge arresters has become more and more important in the power system design and operation. It is worthwhile to note that the reliability of the power system and equipment is dependent on the safety margin adopted by the user in the design and selection of the equipment and surge arresters.

AVA Documents
Document Sharing Hub
Full document details: BS EN IEC 60099-5:2018

IEC 60071-1 specifies withstand voltages for two ranges of highest voltages for equipment:

– Range I: above 1 kV to 245 kV included
– Range II: above 245 kV

In addition this guide uses:

– distribution voltage up to 52 kV
– UHV above 800 kV

For Range I systems containing overhead lines, the main risk to equipment arises from induced and direct lightning strikes to the connected overhead lines. In cable systems not connected to overhead lines, overvoltages due to faults or switching operations are most likely to occur. In rare cases, however, lightning induced overvoltages may also be generated. In systems of Range II, in addition to Range I factors, switching overvoltages become important, increasing with higher system voltages. Overvoltages may cause flashovers and serious damage to the equipment and thereby jeopardize the supply of power to users. It is essential to prevent this by proper coordination of surge arresters with the insulation. Therefore, it is recommended to use surge arresters if there are possibilities of lightning overvoltages or high switching overvoltages, which may be dangerous to the equipment.

The surge arresters should constitute a reliable part of the system. They are designed to withstand the voltages and the resulting currents through them with a sufficiently high reliability taking into account pollution and other site matters. In each system, such voltage stresses are (see IEC 60071-1):

– operating voltage;
– temporary overvoltages;
– slow-front overvoltages;
– fast-front overvoltages;
– very-fast-front (GIS applications)

where the slow-front overvoltages due to switching are of particular importance for arresters protecting Range II equipment.

As a general principle, the best protection of equipment and high surge arrester rated voltages are contradicting requirements. Thus the selection of an adequate arrester constitutes an optimization process, which has to consider a great number of system and equipment parameters. These are further explained in Clause 6, insulation coordination and surge arrester application.

5 Surge arrester fundamentals and applications issues

5.1 Evolution of surge protection equipment

The metal-oxide (also called MO, or sometimes ZnO) surge arrester was introduced in the mid to late 1970s and proved to be a solution to the problems, which could not be solved with the gapped silicon carbide (SiC) arrester technology [19][20][21][1]. The protection level of a surge arrester was no longer a statistical parameter, but could be accurately given. The protective function was no longer dependant on the installation or vicinity to other apparatus – as compared to SiC arresters, where the sparkover voltage could be affected by surrounding electrical fields. The MO surge arrester could be designed to meet virtually any energy requirements by connecting MO resistor elements in parallel (even though the technique to ensure a sufficiently good current sharing, and thus energy sharing, between the columns is sophisticated). The possibility to design protective equipment that could handle extremely

[1] Numbers in square brackets refer to the Bibliography.

Documents
Document Sharing Hub
Full document details: BS EN IEC 60099-5:2018

high-energy stresses also opened up new application areas, protection of series capacitors, for example, where the arrester is a huge arrester bank made of tens to hundreds of individual MO resistor columns connected in parallel.

Some of the first MO surge arresters utilised spark gaps in series with the varistor elements or in parallel with sections of the varistor column (shunt gaps). These designs reflected, to some extent, a concern about the long-term stability of the MO resistor material. Using spark gaps in series or parallel consequently made it possible to decrease the continuous voltage stress on the MO resistors and still maintain a low protection level. Another reason was to obtain protective levels better than for the most qualified SiC gapped arresters at that time with active spark gaps and low protection levels [18].

These designs are not found on the market any longer for HV applications. With experience, the elimination of gaps permitted the design of very compact, reliable, low profile arresters compared to what was possible with the former technology.

On the other hand, MO surge arresters with external series spark gap (externally gapped line arresters: EGLA) are still found on the market, with even increasing tendency. These arresters are used for protection of overhead transmission and distribution lines against lightning related fast-front overvoltages only. These arresters, therefore, are designed not to operate for slow-front and temporary overvoltages.

The MO resistor technology was developed further during the 1980s and 1990s through to the present day, towards uncritical aging behaviour, lower protection levels, higher permissible voltage stresses on the material, greater specific energy absorption capabilities and better current withstand strengths [19][20][22][23][24][26][27][38][39][40][55][56].

New polymeric materials, superseding the traditional porcelain housings, started to be used in the mid-1980s for distribution arresters. By the end of the 1980s, polymer-housed arresters were available up to 145 kV system voltages, and today polymer-housed arresters are accepted for all voltage ranges including 800 kV and the emerging UHV levels (1 100 kV, 1 200 kV) [21][23]. Many of the early polymeric designs utilized EPDM rubber as an insulator material, but during the 1990s more and more manufacturers changed to silicone rubber (SIR), which has an outstanding performance under polluted conditions due to its hydrophobicity (ability to repel water), which is even transferred to pollution layers. SIR insulation is therefore considered less affected by environmental conditions, including UV radiation and pollution.

5.2 Different types and designs and their electrical and mechanical characteristics

5.2.1 General

Surge arresters may first of all be distinguished by their types of applied non-linear resistors: SiC or MO, where the latter is today practically always based on ZnO. Another way of differentiation is with or without gaps. The gaps may be arranged internally and externally, and internal gaps may be series connected to all or shunt connected to part of the non-linear resistors. Another important attribute is the applied housing technology. Air insulated substation (AIS) surge arresters are available with porcelain housings or with polymeric housings, with a wide variety of different designs and polymeric materials. Gas insulated substation (GIS) surge arresters make use of metal enclosures, filled with sulphur hexafluoride (SF_6) at high operating pressures. Furthermore, there exist some other very specific housing technologies for distribution applications.

These different surge arrester technologies were and are, respectively, covered by the following standards of the IEC 60099 series:

– SiC surge arresters with internal series gaps, porcelain-housed: IEC 60099-1 (withdrawn 2013);
– MO surge arresters without gaps, all housing technologies: IEC 60099-4;

Documents
Document Sharing Hub
Full document details: BS EN IEC 60099-5:2018

– MO distribution surge arresters of 52 kV rated voltage or less, with internal series gaps, porcelain or polymer-housed: IEC 60099-6;
– externally gapped line arresters (EGLA) for application in distribution or transmission overhead lines, porcelain or polymer-housed: IEC 60099-8;
– Metal-oxide surge arresters without gaps for HVDC converter substations: IEC 60099-9.

SiC arresters are still in service in huge quantities, but are not available on the market any more. This application guide will address MO surge arresters only. However, in Annex J some aspects of SiC gapped arresters are discussed.

The majority of newly installed surge arresters today are MO surge arresters without gaps. In distribution applications, polymeric housings are predominant. In transmission systems, porcelain housings are still common, but polymeric housings have an increasing market share.

The active part of a gapless MO surge arrester consists of a column of stacked MO resistor elements, mechanically supported by different kinds of structures. MO resistors exhibit a characteristic that is approximated by the equation $I = k \times U^{\alpha}$, where α is the coefficient of non-linearity, having a value dependent upon the material and on the actual region of the voltage-current (U-I) characteristic. It can take values from 5 to 50. MO resistor elements for surge arrester applications are usually of cylindrical shape, with diameters in the range from about 20 mm to about 110 mm and heights of up to about 45 mm. Several MO resistor columns may be connected in parallel within one housing in order to increase energy handling capability (by an increased volume and thus heat capacity) or to reduce the protective level (by a decreased current density at a given current impulse level).

Most of all surge arresters are outdoor types for air insulated substations (AIS), whereas GIS surge arresters are limited to protect gas insulated substations or parts of them.

Traditionally, arresters have mainly protected substation equipment such as power transformers, instrument transformers or in some cases circuit breakers of incoming lines. A comparatively new application (with an exceptionally long tradition in Japan, however) are line arresters, which prevent insulator flashovers caused by lightning strikes to unshielded lines or to shielded lines after shielding failures, or due to high footing impedances in case of strikes to the shield wire or pole/tower (back flashovers). Further applications have become possible by the high energy handling capability of modern MO surge arresters, which can easily be extended by parallel connections of many (sometimes more than one hundred) individual MO resistor columns. Special designs are compatible to cable plug systems and can thus simply be integrated in existing distribution switchgear, and others are directly installed in transformer tanks and operated under oil.

5.2.2 Metal-oxide arresters without gaps according to IEC 60099-4

5.2.2.1 Different types and designs

IEC 60099-4 covers the following types of MO surge arresters without gaps:

– porcelain-housed arresters;
– polymer-housed arresters;
– gas-insulated metal enclosed arresters (GIS arresters);
– separable and deadfront arresters;
– liquid immersed arresters.

These different types of arresters are explained in 5.2.2.2, 5.2.2.3, 5.2.2.4, 5.2.2.5 and 5.2.2.6.

Documents
Document Sharing Hub
Full document details: BS EN IEC 60099-5:2018

5.2.2.2 Porcelain-housed arresters

The gap between the active part of stacked MO resistors and inner wall of the housing may be completely or partly filled with gas or by a solid or semi-solid material (e.g. silicone rubber). The surrounding gas in these arresters typically is nitrogen or (synthetic) air. If other gases, e.g. SF_6, are used it should be checked that all relevant tests as per IEC 60099-4 are made with the actual filling medium in the arresters and that possible leakage is considered. This is in particular important for the short-circuit test since the type of gas probably has a significant effect on the performance of the arrester under short-circuit. To perform the test with air or nitrogen inside the arrester is therefore not representative if other gases are used.

Usually pressure relief devices are provided which ensure that the housing will not fail violently after puncture or flashover of the active part due to energetic overload. It must be noted, however, that designs without pressure relief devices do exist on the market, and special care about safety considerations has then to be taken by the user.

The porcelain housing protects the active part from the environment. The housing shall fulfil many different requirements with regard to

– mechanical strength,
– flashover distance,
– creepage distance,
– performance under polluted conditions,
– sealing against moisture ingress,
– pressure relief under overload conditions.

For surge arrester housings in general (i.e. not limited to porcelain), the requirements on dielectric strength are different from those of all other equipment in electrical power systems. Note that the standard insulation levels of the insulation coordination standard IEC 60071-1:2010 (Tables 2 and 3) are not relevant, but lower values shall be applied instead as an arrester housing represents the best protected insulation in a power system. In order to avoid any flashover under impulse residual voltage stress during arrester operation, the minimum requirements for surge arrester housings, according to IEC 60099-4, are (abbreviations in line with IEC 60071):

– LIWV = 1,3 times the lightning impulse protection level (U_{pl}) of the arrester
– SIWV = 1,1 × $e^{m \times 1\,000/8\,150}$ times the switching impulse protection level (U_{ps}) of the arrester for substation class arresters for use in systems of U_s > 245 kV, where m = 1 in case of 245 kV < U_s ≤ 800 kV, and in case of U_s > 800 kV m is taken from IEC 60071-2:1996, Figure 9, phase-to-earth insulation, with the value on the abscissa being 1,1 times the switching impulse protection level (U_{ps}) of the arrester
– PFWV (peak value) = 1,06 times the switching impulse protection level (U_{ps}) of the arrester for substation class arresters for use in systems of U_s ≤ 245 kV
– PFWV (peak value) = 0,88 times the lightning impulse protection level (U_{pl}) of the arrester for distribution class arresters.

The applied factors take into account increased residual voltages for discharge currents higher than the nominal values and atmospheric correction for altitude of erection of 1 000 m above sea level (which means that an altitude correction for altitudes up to 1 000 m is always included, and only for higher altitudes of installation further corrections have to be applied as defined by IEC 60071-2).

The following example explains the different withstand voltage requirements:

Highest voltage for equipment U_m = 420 kV

– required LIWV for equipment other than surge arrester housings (IEC 60071:2006, Table 3): LIWV = 1 425 kV

Documents
Document Sharing Hub

– required SIWV for equipment other than surge arrester housings (IEC 60071:2006, Table 3): SIWV = 1 050 kV

Typical arrester lightning impulse protection level U_{pl} = 825 kV

Typical arrester switching impulse protection level U_{ps} = 700 kV

– required LIWV for surge arrester housing: LIWV = 1,3 × 825 kV = 1 073 kV

– required SIWV for surge arrester housing: SIWV = 1,24 × 700 kV = 868 kV

Often users are not aware of this special situation for surge arresters and would require the standard values of IEC 60071-1:2010 (Tables 2 and 3). This leads to unnecessarily tall arrester housings, which is not only a problem of geometrical dimensions but also results in an adverse axial voltage distribution and possibly in a more critical performance under polluted conditions. There may be special situations, such as extreme environmental conditions, that require higher impulse withstand ratings, but in general only the requirements of IEC 60099-4 should be applied.

For arresters the sealing system is critical, and this is not only the case for porcelain-housed arresters. Moisture ingress on porcelain-housed arresters is one of the main reasons – if not the only one – for a limited lifetime of MO surge arresters. It should be noted that the electrical aging of the MO resistor elements, i.e. a non-reversible change of the voltage-current-characteristic in the leakage current range, plays only a minor role with respect to surge arrester lifetime and is not a consideration, if verified in accordance with IEC 60099-4.

Limit of unit length is not only given by mechanical and electrical reasons but also for manufacturing or transportation reasons. Therefore, the length of a single arrester unit usually is limited to less than two meters. Arresters for system voltages higher than 245 kV usually comprise more than one unit in series. Beginning from a length of about 1,5 m to 2 m, external grading rings may be applied, which serve for controlling the uneven axial voltage distribution caused by stray capacitances to earth. Though these rings are often considered as undesirable from a substation layout perspective they shall not be omitted during installation, because the arrester might then fail within short time by a thermal runaway (i.e. electrical power losses exceed thermal heat dissipation capability).

5.2.2.3 Polymer-housed arresters

Polymer-housed arresters appeared on the market in the mid-1980s (distribution) and late 1980s (transmission). In distribution, they represent state of the art today and porcelain-housed distribution arresters are hardly available these days. In transmission, the market share of polymer-housed arresters is smaller, but with increasing tendency. A variety of different designs has been developed especially for distribution arresters, but all existing designs can be assigned to one of only few basic design principles that are listed below [49]. It should be noted that, from a mechanical point of view, IEC 60099-4 considers any design of an arrester that uses a pure epoxy-resin housing as a porcelain-housed arrester, because epoxy resin is a brittle material and will, without doubt, mechanically behave like a porcelain housing.

"Tube design": This is an arrester using a housing with an intended included gas volume (similar to a porcelain housing). It must consequently have a sealing and a pressure relief system. The housing is usually a non-ceramic composite housing, formed e.g. from a tube of fibre glass reinforced plastic (FRP), covered by outer weather sheds. The outer weather sheds may be directly moulded to the tube or applied as individual parts in different possible processes. The internal design and surrounding medium in these arresters is normally similar to porcelain-housed arresters.

All other existing designs use housings, which are directly applied to the stack of MO resistor elements, without an intended gas volume included:

"Wrapped design": The mechanically supporting part of the housing is formed by a wrapped FRP structure. This may be implemented by epoxy resin soaked glass rovings or pure

AVA Documents
Document Sharing Hub

impregnated mats or bands that are wound around the MO resistor stack and then cured in an oven. The resulting tube, surrounding the varistor stack, may be completely closed (sometimes with prepared weakened areas that support opening of the housing under overload conditions) or have some open "windows". The wrap may also consist of a prefabricated FRP tube, which is pushed over the stack of MO resistor elements, and where the gap between MO resistors and FRP tube is then filled by some elastic material.

"Cage design": The stack of MO resistor elements is clamped by FRP loops or rods or bands. The MO resistor elements themselves thus act as part of the mechanically supporting structure, and the FRP elements form an open cage. Additional bands may be wound around this cage of FRP elements in order to increase mechanical strength and to improve short-circuit performance. The outer weather sheds have to be directly moulded to the modules, usually making use of silicone rubber.

Though this classification has turned out to be quite practical, another classification with a different background has been adopted by IEC 60099-4, in order to classify designs with regard to different procedures in the short-circuit tests. During short-circuit testing, it makes a difference if the "pressure relief" behaviour of a closed housing with included gas volume shall be verified, or the short-circuit performance of a housing directly attached to the MO resistor stack. These two basic design principles require different approaches in testing. For instance, in order to reflect worst case conditions, in the first case an internal arc has to be initiated by melting a fuse wire located in parallel to the varistor stack and thus representing an internal flashover. In the latter case only energetic overloading (by application of excess voltage) of the arrester will result in a representative failure scenario, as it may not be excluded that individual failed MO resistor elements will break and thus mechanically damage the housing. Therefore, the following has been introduced to IEC 60099-4 with regard to short-circuit performance:

“Design A” arresters have a design, in which a gas channel runs along the entire length of the arrester unit and fills ≥ 50 % of the internal volume not occupied by the internal active parts.

“Design B” arresters are of a solid design with no enclosed volume of gas or having an internal gas volume filling < 50 % of the internal volume not occupied by the internal active parts.

Notes in IEC 60099-4 give further explanation:

"Typically, 'Design A' arresters are porcelain-housed arresters, or polymer-housed arresters with a composite hollow insulator which are equipped either with pressure relief devices, or with prefabricated weak spots in the composite housing which burst or flip open at a specified pressure, thereby decreasing the internal pressure."

"Typically, 'Design B' arresters do not have any pressure relief device and are of a solid type with no enclosed volume of gas. If the resistors fail electrically, an arc is established within the arrester. This arc causes heavy evaporation and possibly burning of the housing and/or internal material. These arresters’ short-circuit performance is determined by their ability to control the cracking or tearing open of the housing due to the arc effects, thereby avoiding a violent shattering."

In other words, "Design A" defines an arrester where the probability of a failure initiated in the gas volume is much higher than in the solid material, and "Design B" defines a design with a higher probability of failure initiated in the solid material. This classification is optimized with regard to test requirements. Many cases will still remain where a differentiation between both designs will be problematical, but it is not possible to differentiate in detail between the different makes of actual arresters on the market. Thus both classifications cited above may co-exist.

The outer part of a polymeric housing, which is exposed to the environment, may be made from different kinds of materials, such as EPDM (ethylene-propylene-diene-monomer), EVA

AVA Documents
Document Sharing Hub

Full document details: BS EN IEC 60099-5:2018

(ethylene-vinyl-acetate) or SIR (silicone rubber), the latter subdivided into RTV (room temperature vulcanizing), HTV (high temperature vulcanizing) and LSR (liquid silicone rubber). These are only generic names, and many sub-variants exist. In most cases, these polymeric materials are doped by chemicals or filled by fillers such as ATH (aluminium tri-hydrate) in order to provide sufficient resistance to environmental impact. Most important characteristics are hydrophobicity (the ability to repel water) and its dynamic behaviour (temporary loss under long-lasting humidification and recovery in following drying periods), and tracking and erosion resistance. It is therefore important and required in IEC 60099-4 that all polymer-housed arresters without gaps are exposed to a weather aging test as part of the type tests.

The performance of the sealing system of a polymer-housed arrester without included gas volume is tested by a water immersion test (boiling for 42 hours).

When applying polymer-housed arresters the user should be aware that, different from porcelain-housed arresters, even designs of extremely high mechanical strength may be deflected under mechanical cantilever loads. This has to be considered in the substation layout, e.g. in case of extremely low clearances to neighbouring equipment.

One different variant of polymer-housed arresters are series-parallel connected designs [48]. These are made up e.g. from distribution system modules, connected in series to meet the required voltage rating and in parallel to meet energy handling and protection level requirements. IEC 60099-4 is not well-prepared to cover all particular aspects of this design (e.g. with regard to short-circuit and mechanical testing), and the user must therefore be aware that the performance of the completely assembled device may deviate from the performance verified in type tests on the individual modules only.

5.2.2.4 Gas-insulated metal enclosed arresters (GIS arresters)

Gas-insulated metal enclosed arresters (GIS arresters) are arresters, which can be directly connected to a GIS. Their metal enclosure is usually made from aluminium or steel. As the interfaces of the gas compartments are manufacturer specific and not standardized, the same applies to the GIS arresters. Therefore, GIS manufacturers usually have their own GIS arrester designs. But with the help of adaptor flanges it is basically possible, though not very common, to connect any GIS arrester to any GIS on the market.

GIS arrester designs may first of all be distinguished by the number of phases in one common metal enclosure. For system voltages 170 kV and below, three-phase designs are common. For higher system voltages, one-phase designs are usually applied.

GIS arresters more than AIS arresters are exposed to the strong influence of earth capacitances affecting the MO resistor column and leading to an extremely non-uniform voltage distribution along the active part if no countermeasures are taken. The internal voltage grading system is therefore more complex than the grading ring system of AIS arresters. Furthermore, for system voltages above 170 kV the internal design of the active part is a mechanically staggered three-column arrangement but electrically a one-column design, the purpose being to reduce the geometrical length of the stack (Figure 1). Insulating plates of extremely high electric strength have to be applied in order to insulate the layers of MO resistors from each other. These arresters require special dielectric withstand tests in 11.8.2 of IEC 60099-4:2014.

Recent developments have been that, even for EHV systems, arresters of mechanical and electrical single column design are used, which make use of high voltage gradient MO resistors (i.e. MO resistors of more "volts per millimetre length"), and UHV arresters with extremely low protection levels by connecting four MO resistor columns electrically in parallel, leading to a staggered active part of twelve parallel MO columns.

In general, the requirements on insulation strength are quite similar to those for AIS arresters (LIWV = 1,3 times U_{pl}, SIWV = 1,25 times U_{ps}, PFWV = 1,06 times U_{ps}) though there is no

AVA Documents
Document Sharing Hub

need for any atmospheric correction: the gas density inside the enclosure remains always the same as long as there is no gas leakage. This is justified by a demand for higher safety margins, because a dielectric failure of a GIS would have much more severe consequences (power arc inside the metal enclosure). For three-phase designs, also phase-to-phase withstand voltages are important.

The coaxial cylinder configuration is the reason for a much lower self-inductance of a GIS arrester compared to an AIS arrester. Typically, for GIS arresters a value of 0,3 μH/m length is assumed, while the value for AIS arresters is 1 μH/m (see also Annex C). Therefore, the protection level of a GIS arrester under steep current impulse stress is lower than that of a comparable AIS arrester.

If a GIS arrester uses metal enclosures that have been tested according to IEC 62271-200 or IEC 62271-203 and if it has no additional internal pressure relief system, no short-circuit test needs to be performed during type tests. Otherwise, the internal pressure relief system shall be tested in a short-circuit test.

Special care shall be taken during commissioning tests on GIS if they include GIS arresters. Arresters cannot withstand the required power-frequency withstand voltage levels of the required dielectric tests. Most of the failures reported on GIS arresters occurred during commissioning testing. GIS arresters shall be removed during these tests, or the integrated disconnectors, which are incorporated in some arrester designs, shall be opened [50][51][52].

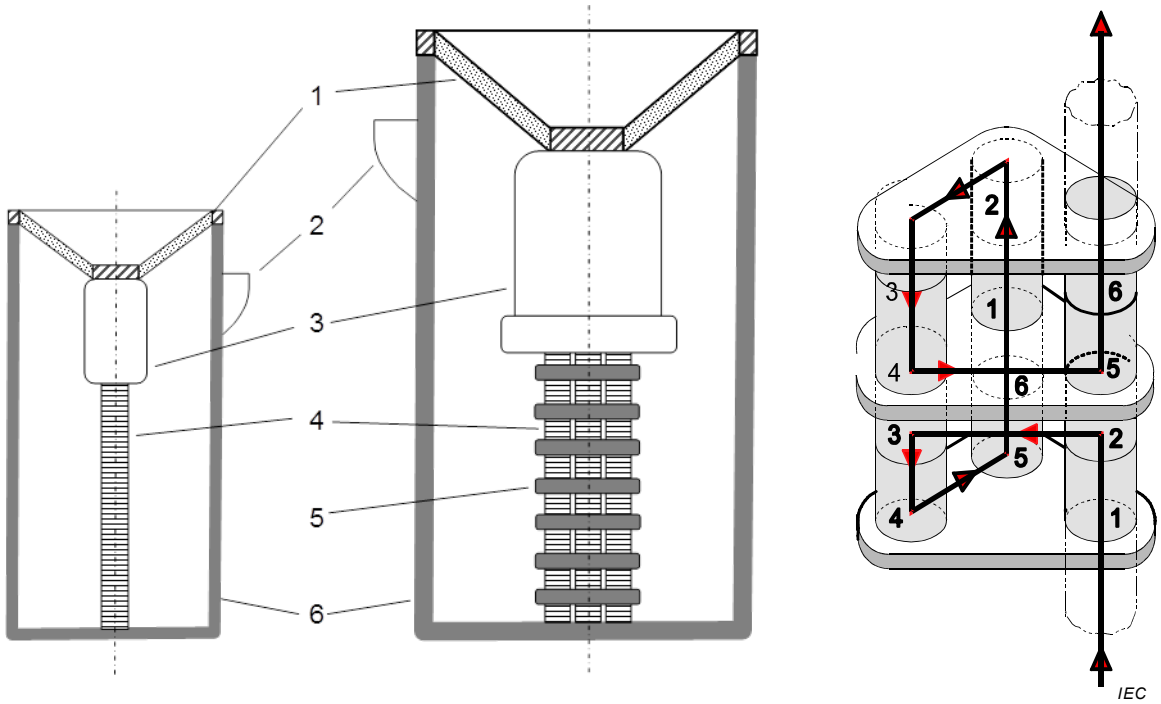

Key

1 Cone insulator
2 Pressure relief vent
3 Grading hood
4 MO resistor stack(s)
5 Floor separation insulators
6 Metal enclosure (tank)

Figure 1 – Example of GIS arresters of three mechanical/one electrical column (middle) and one column (left) design and current path of the three mechanical/one electrical column design (right)

Documents
Document Sharing Hub
Full document details: BS EN IEC 60099-5:2018

5.2.2.5 Separable and deadfront arresters

Separable and deadfront arresters are two different designs of arresters, which have in common that they are not fixed installations and permanently connected to the system by fixed conductors but can be installed and removed by sliding contacts and plugs, respectively. Usually, they are intended for installation in enclosures, such as distribution switchgear, but also outdoor applications are used. Some basic differences exist between separable and deadfront arresters.

Separable arresters may be manufactured in either insulated (polymeric) or screened (metallic or electrically conducting polymeric) housings. In all cases, they are dead-break arresters, which means that the power system shall be de-energized before the arrester may be connected or removed. The use of separable arresters is common in Europe.

Deadfront arresters, sometimes called elbow arresters and common in the USA, always have shielded housings, as shown in Figure 2. They are usually installed in underground and pad mounted distribution equipment and circuits, and they are often of the load-break type, i.e. they can be installed and removed under voltage.

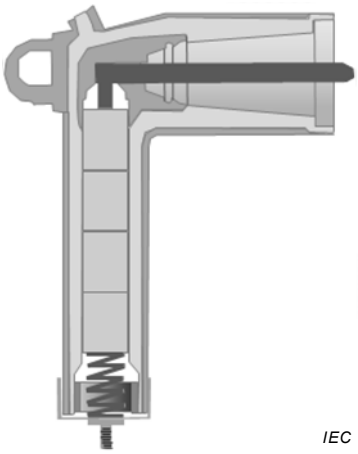

Figure 2 – Typical deadfront arrester

The requirements on insulation withstand are different from those of standard AIS arresters, and they are different for designs with insulating or shielded/screened housings. The requirements arise from those of IEC 60071-1 and IEC 60694 in case of unscreened separable arresters and from IEEE C62.11 in case of screened separable and dead-front arresters (see 12.8.2 of IEC 60099-4:2014).

Further requirements different from those on standard AIS arresters apply for the short-circuit behaviour and related test conditions and evaluation. The user should be aware that separable and dead-front arresters may in case of overload eject arrester parts through the body of the housing by release of a bottom cap or through other parts specifically designed for this purpose. The method of installation should take this possibility into account.

5.2.2.6 Liquid immersed arresters

Although IEC 60099-4 addresses arresters in insulation liquids in general, the only implemented solutions are arresters under oil, which are installed directly in the transformer tank in close proximity to the winding to be protected. They have been applied in huge quantities in the USA since 1980 and in Japan since 1985. In other parts of the world this technology has not generally been accepted and adopted.

Only arresters, which directly protect the transformer windings and which are therefore permanently stressed by the operating voltage, are covered by IEC 60099-4, but not, for example, MO resistor elements that protect tap changers.

AVA Documents
Document Sharing Hub

Advantages of liquid immersed arresters are an optimized protective performance as the arrester is installed as close as possible to the winding, thus avoiding separation effects due to travelling wave phenomena, and the perfect protection of the arrester from the environment.

One problem that has to be solved is the operation under hot oil. For this reason, the accelerated aging test (part of the operating duty test) has to be performed for 7 000 hours (this time may be reduced to not less than 2 000 hours after agreement between manufacturer and user), which however does not give the same confidence on lifetime prediction as a 1 000 hours test on MO resistor elements for standard applications (see Annex E of IEC 60099-4:2014 for further explanation).

Another issue is short-circuit performance. Liquid-immersed arresters may be designed as either “fail-open” or “fail-short”, but it has to be realized that a fail-open design arrester will not always fail in an open-circuit mode for fault currents below its fail-open rating, and that a fail-short design arrester will not always fail in a short-circuit mode for actual fault currents above its fail-short rating. Also, the term “fail-open” should not be taken as implying that the arrester will break the circuit. It only means that, after other devices have cleared the fault, a fail-open arrester allows re-energization of the protected equipment with of course no overvoltage protection. The two basically different approaches of short-circuit behaviour require test procedures and evaluation criteria different from those of all other arrester designs (see 13.8.10 of IEC 60099-4:2014). [53][54]

5.2.2.7 Electrical and mechanical characteristic data

5.2.2.7.1 General

Basic electrical characteristics of metal-oxide surge arresters are the continuous operating voltage, the rated voltage, the nominal discharge current and the residual voltages at nominal discharge current, at switching impulse current and at steep front current. For given continuous operating and rated voltages, different types of arresters, and therefore different protection levels, exist. Further characteristics, which have to be considered are impulse and thermal energy handling capability rated short-circuit current and pollution withstand capability. Mechanical characteristic data are the specified long-term load and the specified short-term load.

With the publication of edition 3 of IEC 60099-4 in 2014 a transition was performed from the line discharge class system towards a purely charge and energy based classification system in terms of repetitive charge transfer rating and thermal energy or charge transfer rating. This application guide addresses these new approaches. However, Annex H of this application guide and Annex L of IEC 60099-4:2014 give information how to convert from the former line discharge classification to the new charge and energy classification. This may help users who have been familiar with the old system to adopt the new approaches.

5.2.2.7.2 Continuous operating voltage, U_c

The continuous operating voltage, U_c, is the maximum permissible value of a sinusoidal power-frequency voltage, which may be continuously applied between the arrester terminals, and is normally (1.05 x system voltage/√3) in solidly earthed neutral systems. This is the recommended minimum value of U_c. Higher values may be adopted (e.g. for achieving better operation stability in case of severe pollution conditions), but for the price of increased protection levels. In isolated, impedance earthed or compensated neutral systems the arresters’ U_c should be at least the same as the highest system voltage, U_s.

5.2.2.7.3 Rated voltage, U_r

The rated voltage U_r is the power frequency voltage that is applied in the operating duty test for 10 s. It represents the minimum 10 s temporary overvoltage capability of the arrester after injection of rated thermal energy or charge. It is often used as a reference parameter to establish arrester characteristics.

AVA Documents Document Sharing Hub

Full document details: BS EN IEC 60099-5:2018

Standard rated voltages are defined in steps of 1,3, 6, 12, 18, or 24 kV according to IEC 60099-4:2014. Other values may be accepted.

5.2.2.7.4 Nominal discharge current, I_n

The nominal discharge current I_n is used for the surge arrester classification. Four standard nominal discharge currents exist according to IEC 60099-4:2014, Table 1, with an increasing number indicating increased duties and requirements (2,5 kA, 5 kA, 10 kA, 20 kA). The nominal discharge current is the main parameter for the protective characteristics and the classification of the arrester. Its choice has also an impact on the whole procedure of insulation coordination, because the lightning impulse protection level (U_{pl}) of an arrester is specified as its residual voltage during discharge of a current equal to I_n.

5.2.2.7.5 Protective (or protection) levels, U_{pl} and U_{ps}

The lightning impulse protective level, LIPL (according to IEC 60071-1) or U_{pl} (according to IEC 60099-4) of an arrester is the maximum residual voltage at nominal discharge current. It is applicable to the protection of equipment from fast-front overvoltages.

The switching impulse protective level, SIPL or U_{ps} is the maximum residual voltage at the specified switching impulse currents. It is applicable to the protection of equipment from slow-front overvoltages.

For the protection performance of metal-oxide surge arresters for very-fast-front overvoltages the residual voltage is tested in the steep current impulse test.

5.2.2.7.6 Repetitive charge transfer rating, Q_{rs}

This characteristic quantity was introduced in IEC 60099-4:2014. It replaces, together with a second characteristic quantity (either W_{th} or Q_{th}, see 5.2.2.7.7), the line discharge class of an arrester, which had been in use so far. Charge has been chosen as a typical characteristic parameter for the purpose of better comparison between different makes of MO resistors. The repetitive charge transfer rating is related to a certain very low failure probability and is thus not a deterministic but a statistical value.

Repetitive charge transfer capability, given in C (Coulomb), is specified as an impulse current stress that can be withstood by the MO resistors of an arrester twenty times without mechanical or unacceptable electrical damage. One impulse current stress is considered to represent a charge transfer event that may occur under real system conditions. The charge, according to definition 3.51, may be accumulated in a single event or group of surges lasting for not more than 2 s, and which may be followed by a subsequent event at a time interval not shorter than 60 s.

An arrester shall be assigned a Q_{rs} value from a list given in 8.5.4 of IEC 60099-4:2014. Other requirements may apply for different types of arresters such as NGLA and EGLA.

5.2.2.7.7 Thermal energy rating, W_{th}, and thermal charge transfer rating, Q_{th}

These ratings were introduced in IEC 60099-4:2014. They replace, together with the repetitive charge transfer rating (Q_{rs}, see 5.2.2.7.6) the line discharge classes of substation class arresters, which had been in use so far, or are used to classify distribution class arresters, respectively.

A substation class arrester shall be assigned a W_{th} value from a list given in 8.7.3 of IEC 60099-4:2014. This value, given in kJ/kV of rated voltage, is used to specify the thermal energy handling capability of substation class arresters. It is the (specific) energy that has to be injected by any number of individual current impulses within a period of three minutes in the operating duty test.

Documents
Document Sharing Hub
Full document details: BS EN IEC 60099-5:2018

A distribution class arrester shall be assigned a Q_{th} value from Table 5 in 8.7.3 of IEC 60099-4:2014. This value given in C, is used to specify the charge that can be transferred by a distribution class arrester without becoming thermally unstable at U_c. It is the charge, which has to be transferred during the operating duty test in the form of two 8/20 lightning current impulses.

5.2.2.7.8 Rated short-circuit current, I_s

The rated short-circuit current I_s is an internal fault current after failure of the arrester's active part, which the arrester is able to withstand for 200 ms without violent shattering of the housing and risk of maintaining fire. In the short-circuit type test, also the short-circuit performance at lower currents, approximately 50 % and 25 % of the rated short-circuit current, as well as at a current of only 600 A for one second has to be verified. The reason for testing also at lower currents is that due to the design lower currents may be more critical. This is in particular the case for long units of porcelain-housed arresters.

Since publication of IEC 60099-4:2014 it is required that every arrester shall have a short-circuit rating. Only for applications with expected short-circuit currents below 1 kA the rated value “zero” may be claimed. In this case “0” shall be indicated on the name plate, but the arrester must still pass a short-circuit test. In this case amplitude and duration shall be agreed between user and manufacturer.

Users should be aware that short-circuit testing according to IEC 60099-4:2014 does not address the ability of a failed arrester to withstand subsequent reclosing events.

5.2.2.7.9 Pollution withstand characteristics

The pollution withstand capability of an arrester concerns three aspects:

a) The arrester housing has to withstand the pollution stresses without flashover. This can be verified according to IEC 60507 or is assured by a design according to the IEC 60815 series.

b) The arrester has to withstand the possible temperature increase due to the transient changes in voltage distribution caused by the pollution activity on the surface of the housing. Consideration should be given to the pollution level and the frequency and amplitude of overvoltages caused by faults and reclosing operations during polluted conditions. A test procedure for multi-unit porcelain-housed arresters is given in Annex C of IEC 60099-4:2014. For polymer-housed arresters, no similar test procedure has been specified so far.

c) The arrester has to withstand internal partial discharges from high radial fields caused by disturbed voltage grading on the housing due to pollution, without damage to the MO resistor elements or to the internal mounting elements. No related test procedure exists so far [42].

5.2.2.7.10 Resistance of polymeric housings to environmental impact

For arresters with polymeric housings the long term performance and resistance to environmental impact, such as light pollution, rain, electrical surface discharges have to be demonstrated in a “weather aging test”. This test is a 1 000 hours salt fog test with permanent exposure to salt fog of a given salt mass concentration under applied continuous operating voltage. As a fundamental requirement, the longest electrical unit of the design has to be tested in order to also demonstrate that there is no impact from the radial field stress (puncture of the housing, effects of internal partial discharges) that may be imposed by the permanently changing potential distribution on the housing.

Resistance against solar UV radiation stress is verified by a separate material test.

Documents
Document Sharing Hub

Full document details: BS EN IEC 60099-5:2018

5.2.2.7.11 Specified long-term load, SLL

The specified long-term load SLL is a force perpendicular to the longitudinal axis of an arrester, allowed to be continuously applied during service without causing any mechanical damage to the arrester. It can be given in terms of force (in N) or bending moment (in Nm), where in the latter case the related force can be calculated by dividing the bending moment value with the arrester length (in m). For high-voltage polymer-housed arresters, the SLL is verified by a cyclic load test, followed by evaluation tests that include a leakage seal test (water immersion test) against moisture ingress. Short arresters, i.e. arresters for system voltages not exceeding 52 kV, do not need to be type tested in a cyclic manner but by a simple bending test. The same applies to porcelain-housed arresters in general, where due to the fact that they are not deflected under mechanical loads a simple bending test is considered sufficient as well.

5.2.2.7.12 Specified short-term load, SSL

The specified short-term load SSL is the greatest force perpendicular to the longitudinal axis of an arrester, allowed to be applied during service for short periods and for relatively rare events (for example, short-circuit current loads or extreme wind gusts) without causing any mechanical damage to the arrester. As for the SLL, it is given in terms of force (in N) or bending moment (in Nm). The SSL is a load that the arrester could be subjected to even after many years in service, which is taken into consideration by the related type test procedure (the SSL test follows the SLL test). It is important to note that SSL does not cover any seismic loads, which may require much higher SSL values than usually applied for normal service conditions, and which therefore needs special consideration by tests according to IEC TR 62271-300.

5.2.3 Metal-oxide surge arresters with internal series gaps according to IEC 60099-6

5.2.3.1 General

This standard is limited to MO surge arresters with internal series spark gaps designed to limit voltage surges in AC distribution systems (rated voltages 52 kV and below), housed in either porcelain or polymeric housings.

5.2.3.2 Different types and designs

IEC 60099-6:2002 covers series gapped MO surge arresters. The internal series gap design (see Figure 3) has been in use since the late 1970s in Japan and USA. It combines the characteristics of the oldest arrester design component, a series gap, with the latest arrester design component, a MO resistor stack [18]. The MO resistor stack is similar to a standard MO arrester and has got roughly the same characteristics. The gap is generally an air gap in series with the varistor stack and sometimes in parallel with grading elements or another MO resistor part. The gap section may be a single unit, or several units. This is the same for the MO resistor part, it may be a single MO resistor element or a plurality of such elements.

Each component of the series gapped MO arrester is significantly different from the earlier gapped SiC arresters. In the earlier generation SiC arrester designs, the gap section functioned as the switch that turned on at the moment of the surge, and turned off when the voltage across the gap was near zero. The gap was used for both turning the arrester on and turning it off in a sense. The gap of the series gapped MO arrester is used only for initiating an operation, but not for ending it. The MO resistor part has assumed the function of ending the surge operation of this design. Due to the extreme nonlinear characteristic of the MO element there is no follow current through the arrester and gaps, as there was with the silicon carbide gapped arrester. The elimination of follow current also eliminates the degradation of the gaps.

Because the internal gap withstands most of the voltage across the arrester (if not all), the MO portion of the arrester can contain fewer MO resistor elements than an ungapped arrester. The MO resistor element voltage needs only be high enough to fulfil its function to

AVA Documents Document Sharing Hub

Full document details: BS EN IEC 60099-5:2018

switch off the arrester after the surge has passed. This means the turn on voltage of the arrester can be just a few percent above the system voltage that will be applied to it during a surge. A lower reference voltage translates directly into fewer MO resistor elements or at least less MO material.

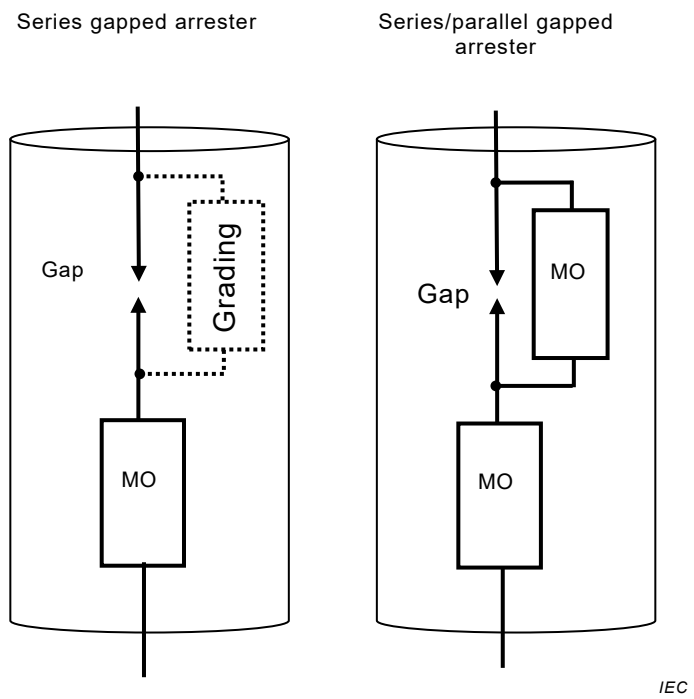

Figure 3 – Internally gapped metal-oxide surge arrester designs

5.2.3.3 Electrical and mechanical characteristic data

5.2.3.3.1 Rated voltage and continuous operating voltage

Unless otherwise stated by the manufacturer, the rated voltage (U_r) of arresters tested and designed according to IEC 60099-6 is derived by the same means as U_r for arresters tested and designed according to IEC 60099-4. The continuous operating voltage (U_c) is also derived by the same means and can be considered identical in definition and usage as an MO arrester without gaps as designed and tested per IEC 60099-4.

5.2.3.3.2 Arrester class and energy handling requirements

Arresters covered in IEC 60099-6:2002 are of LD class 1 only (according to the former definition in IEC 60099-4, up to Edition 2.2 (2009), after which the line discharge class system was replaced by other approaches). The energy absorbed by this arrester is generally lower than that of an arrester without gaps in the same application because generally there are fewer MO resistor elements in a comparably rated gapped arrester. But charge transfer and current carrying capabilities of this arrester are similar to the gapless arrester. However, the test procedures are still in accordance with 60099-4:2009. A new revision of 60099-6, which is currently under work, will refer to the new requirements and test procedures of 60099-4:2014.

5.2.3.3.3 Insulation coordination considerations

The protective characteristics of arresters designed and tested according to IEC 60099-6 are as follows:

a) residual voltage for steep current impulse and front-of-wave sparkover according to 7.3.2 and 7.3.6.2 of IEC 60099-6:2002;

Documents
Document Sharing Hub
Full document details: BS EN IEC 60099-5:2018

b) residual voltage versus discharge current characteristic for lightning impulses and the 1,2/50 impulse sparkover according to 7.3.3 and 7.3.7.2 of IEC 60099-6:2002;

c) residual voltage for switching impulse and the switching impulse sparkover according to 7.3.4 and 7.3.8.2 of IEC 60099-6:2002.

In all cases, the higher of the two values is reported as the protective characteristic. This maximum value has to be used in the insulation coordination procedure. The insulation coordination must also take into account a larger spread in the protection level for this type of arresters, due to the sparkover characteristic of the gaps.

5.2.3.3.4 Temporary overvoltage considerations

The temporary overvoltage (TOV) characteristics of arresters designed and tested per IEC 60099-6 can be considered in the same manner as arresters designed and tested per IEC 60099-4.

5.2.4 Externally gapped line arresters (EGLA) according to IEC 60099-8

5.2.4.1 Different types and designs

The purpose of most line surge arresters (LSA) is to prevent insulator flashovers due to direct lightning strikes to the conductor of an unshielded line, by a shielding failure of a shielded line or due to back flashovers [15][58][62]. Main distinguishing features of line arresters, which are in all cases MO arresters today, are

– gapped or gapless;

– porcelain-housed or polymer-housed;

– for distribution or for transmission line application;

– for lightning and/or for switching overvoltage protection.

Non gapped line arresters (NGLA) are tested according to IEC 60099-4, while the externally gapped line arresters (EGLA) are tested according IEC 60099-8. An EGLA consists of a series varistor unit (SVU) and an external series gap, as shown in Figure 4, where one electrode is installed on one end of the SVU and the other electrode is fixed to the line insulator. Another solution is to attach the electrodes of the EGLA's external gap across an insulator in series with the SVU, but this design is not covered by IEC 60099-8.

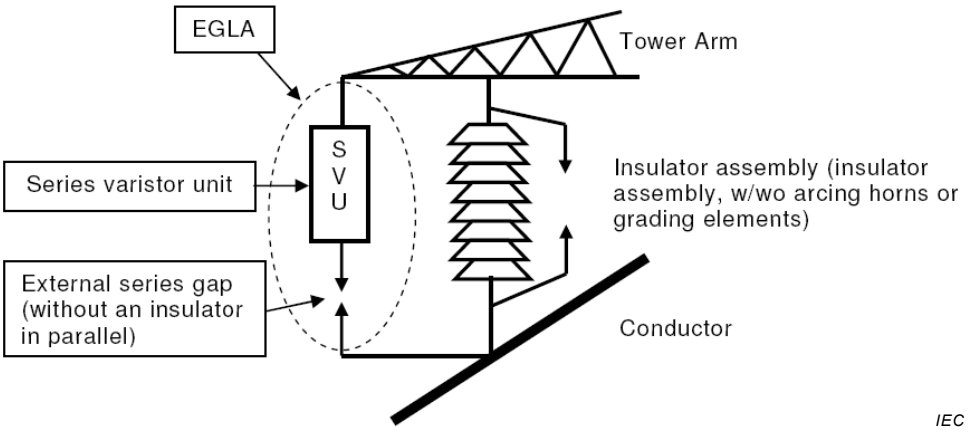

Figure 4 – Components of an EGLA acc. to IEC 60099-8

Documents
Document Sharing Hub
Full document details: BS EN IEC 60099-5:2018

5.2.4.2 Electrical and mechanical characteristic data

5.2.4.2.1 General

EGLA protect only against the impact of lightning overvoltages, therefore, the following issues relevant to gapless substation arresters or line arresters against the effects of switching overvoltages are not relevant for EGLA:

– residual voltage at switching impulse current;
– thermal stability;
– long duration current impulse withstand duty;
– power-frequency voltage vs. time characteristics;
– ageing duties by power-frequency voltage.

EGLA do not have operating duties for slow-front surges and power-frequency overvoltages. Therefore, they need not and cannot be classified by energy handling characteristics. The classification is exclusively based on the nominal discharge current and the high-current impulse withstand capability. As there is a long tradition in EGLA application in Japan, IEC 60099-8 includes two classification systems: Series "X" (ranging from "X1" to "X4") and Series "Y" (ranging from "Y1" to "Y4") arresters. The first should preferably be used for new applications, the latter takes the Japanese practice into consideration. As a particularity, for the "Y" series both the nominal discharge current and the high current impulse have a current shape 2/20, which is calculated as a typical shielding failure current in shielded transmission lines and has been agreed as a common practice in Japan.

The basic electrical characteristics of EGLA are the rated voltage, the class (X or Y, which includes the nominal discharge current and the high current impulse withstand), the lightning discharge capability, the coordination between the insulator withstand and the EGLA protective level, the follow current interruption capability under polluted conditions and the rated short-circuit current.

The mechanical characteristic data are subject to agreement between manufacturer and purchaser. As a minimum requirement, the EGLA must be able to withstand the vibration loads expected in service. Examples of such data are forces due to short-circuit current and line vibration.

The following sub clauses address the characteristics data of an EGLA.

5.2.4.2.2 Rated voltage, U_r

The rated voltage U_r is the maximum permissible r.m.s. value of power frequency voltage between the EGLA terminals, at which it is designed to operate correctly. It must therefore be higher than the maximum expected power-frequency temporary overvoltage expected in the intended installation. The rated voltage is also used as a reference parameter for the specification of operating and current interrupting characteristics.

5.2.4.2.3 EGLA class

EGLA are classified by a series name, which may be "X" or "Y". Within each series, there are subclasses "X1" to "X4" and "Y1" to "Y4", respectively. Each sub-class stands for a combination of the nominal discharge current and the high current impulse withstand. The classes are listed in Tables 1a and 1b of IEC 60099-8:2011.

5.2.4.2.4 Lightning discharge capability

The lightning discharge current was introduced especially to test line arresters and is also specified in Annex H of IEC 60099-4:2014. The current wave shape is approximately sinusoidal with a time duration of 200 to 230 μs, which results in a current wave shape of about 90/200 μs. Eighteen impulses have to be applied to each test sample (single MO

Documents
Document Sharing Hub

Full document details: BS EN IEC 60099-5:2018

resistor elements in still air) during the type test, making the test a durability test. The lightning discharge capability of the EGLA is specified by the charge transfer capability in C (this value must be shown on the EGLA nameplate).

5.2.4.2.5 Insulation withstand

An external series gap normally isolates SVU from the line and sparks over only when lightning overvoltages occur. Therefore, the external series gap shall withstand temporary overvoltages and slow-front overvoltages (earth-fault overvoltages, energization and re-energization overvoltages etc.) in the line and the SVU shall withstand its residual voltage when lightning current flows after sparkover of the external series gap. The gap length shall be designed on condition that the SVU has failed and is shorted, and all of the overvoltages are applied across the external series gap.

5.2.4.2.6 Co-ordination between insulator withstand and EGLA protective level

The correct coordination between flashover characteristics of the insulator assembly, the sparkover voltage of the EGLA with front-of-wave and standard lightning impulses and the residual voltage of the EGLA at nominal discharge current has to be demonstrated either in a type test (with a "generic" gap assembly) or in an acceptance test (with the spark gap and insulator assembly specific for the intended application). Any sparkover operation for lightning impulse voltage must occur in the external series gap, without causing any flashover of the insulator assembly to be protected. Two different approaches for verification are allowed: the demonstration may be performed either as a type test, without the insulator assembly, or as an acceptance test including an insulator assembly of the shortest insulation distance of the intended application. In the first case, sparkover and residual voltages (including inductive voltage drops across the SVU, the gap and the connection leads) are determined and coordination with the insulator assembly is performed by statistical means. In the latter case, correct operation of the configuration (reliable sparkover of the gap, no flashover of the insulator assembly) comes out directly, and only safety margins are calculated by statistical means.

Switching impulse wet withstand tests and power frequency wet withstand tests must be performed with the SVU shortened to determine the minimum external gap length, for which no sparkover will occur in the EGLA, so that all switching overvoltage flashovers are across the line insulation.

5.2.4.2.7 Follow current interrupting performance under polluted conditions

The follow current interruption operation of the EGLA under wet and under polluted conditions is required to be demonstrated in a type test or acceptance test. In real service, no flashover of the SVU surface is allowed, and the follow current in the external series gap must be reliably interrupted.

IEC 60099-8 specifies two different approaches for a "follow current interrupting test", named "Test method A" and "Test method B". If the pollution severity on site is "Very heavy" according to the definition in IEC TS 60815-1, "Test method B" shall be applied. Otherwise, the choice of the test method is up to the manufacturer.

With "Test method A", the effect of pollution on the SVU external surface current is modelled by an additional linear resistor connected in parallel to the SVU, and the test is performed under clean and dry conditions. The parallel linear resistance is required to be selected such that the resulting follow current equals at least that through a solid pollution layer, having a conductivity according to the specified SDD level.

"Test method B" is a test under artificial pollution conditions.

For both methods, the test setup is energized at power-frequency voltage equal to the EGLA rated voltage, and then five sparkovers at each polarity are initiated by lightning impulse voltage application. The developing follow current is required to be interrupted within the first

AVA Documents Document Sharing Hub

half cycle of the power-frequency during each of the ten operations, and no further sparkover shall occur in any subsequent half cycle.

5.2.4.2.8 Rated short-circuit current, I_s

In the type test, basically the short-circuit test procedure of IEC 60099-4 applies. It is up to the manufacturer if the test samples are mounted standing upright or hanging (according to the intended installation). It is noted – but not required – that special mechanical requirements after the test may apply, e.g. that the SVU remains mechanically intact and can be lifted and removed by its top end. A problem, also for other tests on EGLA, is that the spark gap and the SVU are independent devices, and that the gap may be of many different designs for each individual application. Therefore, the gap is not included in the short-circuit test, but has to be tested elsewhere.

Short-circuit tests according to IEC 60099-8 allow arresters to fall apart as long as the pieces fall within specific areas below. This concession in the present standards should be noted carefulluy since many areas below transmission or distribution lines are open to the public.

Users should be aware that short-circuit testing according to IEC 60099-8 does not address the ability of a failed SVU of an EGLA to withstand subsequent reclosing events.

5.2.4.2.9 Mechanical performance

As for substation arresters, specified long-term load (SLL) and a specified short-term load (SSL) shall be specified. Besides the mechanical tests as per IEC 60099-4, an additional vibration test has been introduced to IEC 60099-8. The basic requirement is a number of one million oscillations of 1 × g at the SVU's free end. It is also mentioned in a note that such a test should also be performed on the gap assembly.

5.2.5 Application considerations

5.2.5.1 General

An arrester, compared with other equipment in a substation, is essentially a simple device. In fact, there are not too many requirements to the user on transportation, storage and erection of an arrester. However, it should not be underestimated that an arrester with all its accessories such as grading and corona rings, flange covers or insulating base, contains semi-conducting, highly non-linear MO resistor elements, which are continuously connected to the line for the full arrester's lifetime. An arrester has been very carefully optimized by the manufacturer for a good compromise between stable operation under continuous operating voltage and environmental stresses on one hand and low protection levels and high energy handling capability on the other. This balance is easily disturbed if any accessories are omitted or assembled incorrectly. Therefore, it is essential to read and follow the manufacturer's installation and operation manuals.

The precautions specified by the manufacturer for transportation and storage should be strictly followed. In particular, porcelain-housed arresters are usually very sensitive to transportation stress, which often represents the highest mechanical stress during an arrester's lifetime. In most cases transportation and storage in upright position are specified.

For polymer-housed arresters it is particularly important to ensure a controlled climate during storage. Biological growth, e.g. of moss and fungi, on the housing may be initiated or supported if the arresters are stored in the wrapping enclosure as used for transportation. The manufacturer usually gives clear instructions if the transportation enclosure shall be removed for storage or not.

Grading rings or corona rings should not be omitted under any circumstances.

Insulation coordination and arrester selection are further discussed in Clause 6.

Documents
Document Sharing Hub

Full document details: BS EN IEC 60099-5:2018

5.2.5.2 Connection leads

The national specifications and the requirements of the system user are in principle to be observed for the connections. The connecting lead cable and termination shall be adequately rated for the impulse duty associated with the rated short circuit current. The diameter of the connections shall be chosen in such a way that at least the short circuit current for the respective arrester (kA range for the given short circuit current duration of μs to s) does not lead to the melting or the tearing off of the connections. This applies to both the high voltage connections as well as the connections to the earth.

The cross-sectional area of the connecting leads is determined more by mechanical than by electrical requirements. It mainly has to fit to the overhead line conductor or the bus bar with regard to corona performance. Due to the very short time of discharge current flow, power or energy consumption in the conductor plays less a role here even though the currents may be high. The leads will see only a few mA of leakage current during steady state conditions. Any fixings shall also be capable of the mechanical duty necessary to meet the above, especially if used in an inverted or inclined from vertical applications.

5.2.5.3 Inductive voltage drops

5.2.5.3.1 Connection leads and arrester height

The inherent resistive and inductive impedance in the leads will increase the effective residual voltage seen by the equipment being protected. This issue is particularly sensitive for protection from fast-front overvoltages. Therefore it is important to keep these lead lengths short and free of inductive loops. As an example, a steepness of 5 kA/μs of a lightning current impulse can be expected. Under these conditions the inductive voltage drop shown in the arrangement of Figure 5 is:

$$U_{\mathrm{i}} = L \times \frac{di}{dt} = 10\ \mu\mathrm{H} \times 5\ \mathrm{kA/\mu s} = 50\ \mathrm{kV} \qquad (1)$$

This does not necessarily appear simultaneously at the peak value of the arrester residual voltage. However, this value of 50 kV demonstrates the order of magnitude of possible inductive voltage drops which can superimpose the arrester residual voltage (which is typically 800 kV to 850 kV for this example).

5.2.5.3.2 Separation distances

Due to their possible high rate-of-rise, travelling wave effects between arrester and equipment cannot be neglected for fast-front overvoltages (whereas they do not play a role for slow-front overvoltages within substations). Generally, fast-front overvoltages at the protected equipment are expected to be higher than the arrester residual voltage. The overvoltage at an open terminal or a terminal with a high surge impedance (such as a transformer terminal) will rise with two times the steepness of the original surge until, after two travelling times of the surge from the arrester to the apparatus terminal, the arrester will effectively reduce the voltage. A damped oscillation having an amplitude of up to two times the arrester's lightning impulse protective level U_{pl} and a cycle time of four times the travelling time from the arrester to the apparatus will be the result. The shorter the travelling distance is, the lower the amplitude of the resulting overvoltage. Therefore, it is always good practice to minimize distances between arrester and major equipment. Maximum protection distances are typically only a few meters in distribution systems and several ten meters in high voltage systems. Sometimes, it is possible to protect more than one apparatus with a single arrester installation provided that rates of rise can be limited as in the case where both the substation and overhead lines are adequately shielded.

Documents
Document Sharing Hub

Full document details: BS EN IEC 60099-5:2018

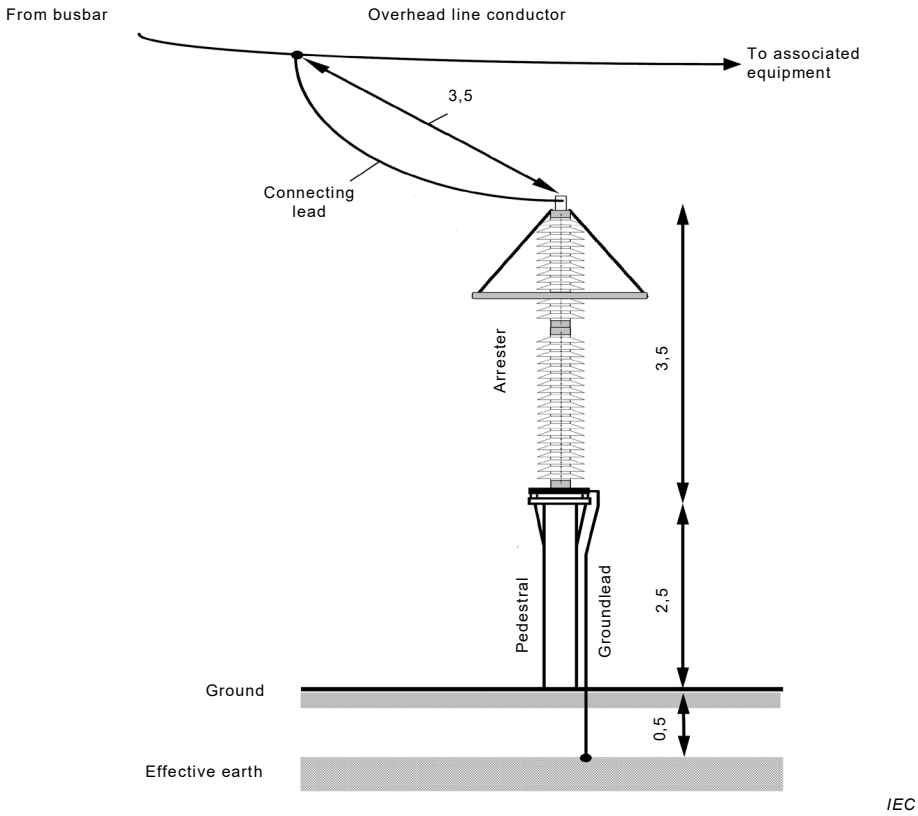

Figure 5 – Typical arrangement of a 420 kV arrester

5.2.5.4 High-voltage substation arresters

5.2.5.4.1 Installation considerations

Multi-unit high-voltage arresters are usually delivered in individual units, which need to be assembled during erection on site. Again, it is important here to follow the manufacturer's mounting instructions. The units need to be assembled strictly in the correct order as they may have different voltage ratings and housing lengths. A wrong arrangement may cause external flashovers to the intermediate flanges or poor performance in polluted environment. If straps are used in order to lift the units care must be taken not to damage the insulating sheds in case of polymer-housed arresters. Some types of surge arresters (usually porcelain-housed or polymer-housed arresters of "tube design") require mounting of metallic top cover plates and intermediate plates between the individual units. If these plates are left out the short-circuit (pressure relief) performance of the complete arrester may be affected.

Beginning with a height of about 1,5 m to 2 m, MO surge arresters are equipped with grading rings. These rings serve for continuous operating voltage grading along the arrester axis. As a matter of course, these rings should not be omitted. It is also important that rings of exactly those dimensions as specified by the manufacturer are used. The number of rings, their diameter and the length of their supporting struts are carefully optimized with respect to voltage and temperature distribution within the arrester. Leaving out the grading rings or using such of wrong dimensions may lead to a complete failure of the arrester within short time.

Usually the highest stress due to uneven voltage distribution along the arrester, caused by earth capacitances, occurs when the arrester is erected directly on the ground. The delivered grading rings are dimensioned in order to handle this worst case situation. In addition, if the arrester is installed on top of a pedestal, which reduces the impact of earth capacitances, the grading rings must not be omitted or changed. For further details on this subject see IEC 60099-4:2014, Annex F.

Documents
Document Sharing Hub
Full document details: BS EN IEC 60099-5:2018

In the case of an arrester with grading rings the manufacturer's declared minimum clearances to earthed or live parts measured from the outer circumference of the largest ring must be adhered to. If the grading rings constitute a problem with clearances no change of the configuration is permitted. The manufacturer should then be contacted in order to decide – for the particular application – if another configuration can be adopted.

At system volatges 550 kV and above, arresters are delivered with additional corona rings, which shall be mounted on top of the arrester in order to electrically shield the high-voltage terminal. They serve to limit corona effects and the radio interference voltage (RIV) level. It is important during assembly not to mix up grading rings and corona rings, which may largely differ in dimensions. Figure 6 shows examples of HV arresters equipped with grading and corona rings.

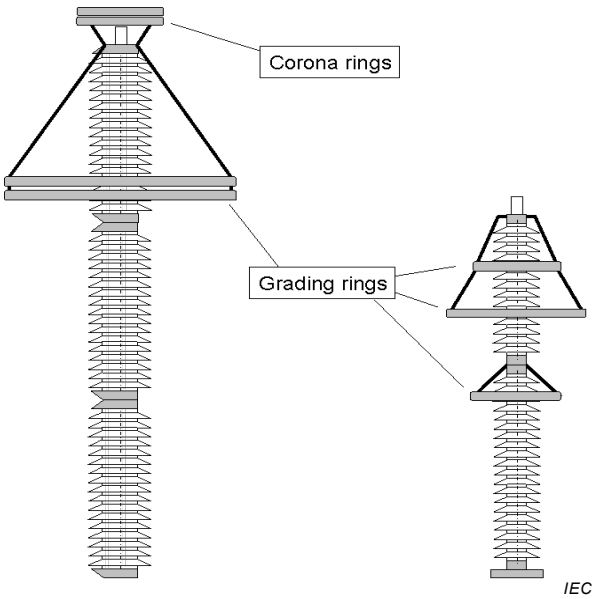

Figure 6 – Examples of UHV and HV arresters with grading and corona rings

The manufacturer also gives clear instructions on the possible mounting positions of the arrester (standing upright, suspended, inclined). In a suspended installation the orientation of the weather sheds shall not be changed, i.e. the upper surface of the sheds shall be directed upwards. Similar considerations with regard to orientation of the weather sheds apply for mounting the arrester at a certain angle (if this is allowed by the manufacturer).

When mounted suspended from an earthed structure the functions of arrester top and base are exchanged: the top flange is earthed, and the base acts as high-voltage terminal. In this case the grading rings must be connected to the base (i.e. the high-voltage terminal). If, however, the arrester is suspended from a line conductor, the top terminal is the high-voltage terminal, and the arrester is oriented as on a pedestal. Figure 7 gives examples for different kinds of installations. As aforementioned, the individual units of an arrester may have different voltage ratings and therefore have to be assembled in a predefined order from bottom to top , or, more precisely, from the earthed to the live end. In a suspended installation this order might thus be affected as the bottom flange represents the high-voltage terminal and the top flange is the earthed end. It should be carefully checked from the data sheet or the installation instruction if suspended installation is generally allowed or not, or whether it is allowed only if changes in the order of the individual units are applied. Usually, for that reason, intended installation other than standing upright should be specified at the time when the arrester is ordered. If there is any doubt during erection on site, the manufacturer should be contacted.

If the arrester is erected with an insulating base in order to allow connection of monitoring devices (such as counters or leakage current indicators) the insulating base must not be short-circuited in the new as well as in aged condition. This implies the need for occasional

AVA Documents
Document Sharing Hub

cleaning during service life. Although a short-circuited or bypassed insulating base will not affect the arrester's function this may lead to a malfunction of the connected monitoring devices.

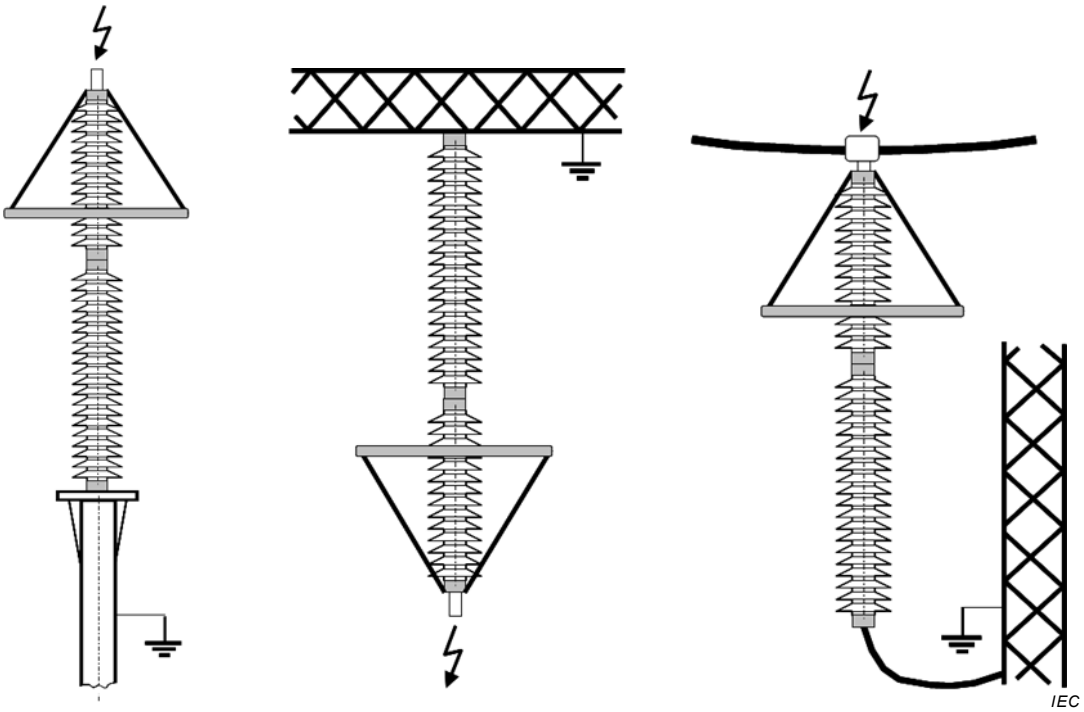

Figure 7 – Same type of arrester mounted on a pedestal (left), suspended from an earthed steel structure (middle) or suspended from a line conductor (right

If the arrester is equipped with pressure relief devices and vents (which usually is the case with porcelain-housed or polymer-housed arresters of the "tube design") the position of the vents should be carefully chosen. First of all, personnel have to be protected. A good compromise should be found to protect primarily people but also valuable equipment from the impact of a burning arc in case of pressure relief. It is important to mention that not only the direction of the venting outlet but moreover the direction of the acting electrodynamic (Lorentz) forces caused by the short-circuit current will decide on which way the burning arc is travelling. In this sense also the arrester itself should be protected from direct contact with the arc in order to avoid possible thermal breaking (in case of porcelain) or burning (in case of polymer) of its housing and thus to minimize damage after failure.

5.2.5.4.2 Earthing considerations

As a general rule, surge arresters should be located as close as possible to the equipment to be protected in order to ensure effective overvoltage protection. The length of HV and earth connection leads should be short and as straight as practical in order to minimise the loop inductance and ensure minimum voltage drop across the leads (see Figure 8 and Figure 9). The HV and earth leads, together with the connection points, should be rated to withstand both the high-magnitude surge currents as well as short circuit current in the event of a flashover at the arrester or equipment location. A low earth impedance electrode is required to dissipate safely the high magnitude current into the earth.

The earth side of the arrester is connected to the substation earth. Figure 8 and Figure 9 illustrate the difference between transmission and distribution models. The earth mat is the reference point for the effective protective voltage level. It is also the point at which the arrester will channel current into the mat quickly to provide overvoltage control.

Documents
Document Sharing Hub
Full document details: BS EN IEC 60099-5:2018

The connection between the arrester and the equipment necessitating protection should be kept as short as possible to minimise voltage drop due to conductor impedance to fast-front overvoltages. Furthermore, a loop in the earthing connection may cause flashovers of the arresters insulating base, which usually withstands only a few kilovolts. While direct connection to the equipment (e.g. transformer tank) is effective, due consideration needs to be given to the conduction path of high frequency current through the tank. This could cause potential rise problems else where and introduce safety risks.

For inverted or under hung arresters the earth connection can be very long, with lengths over 20 m. This shall be taken into account when establishing the design protective margin.

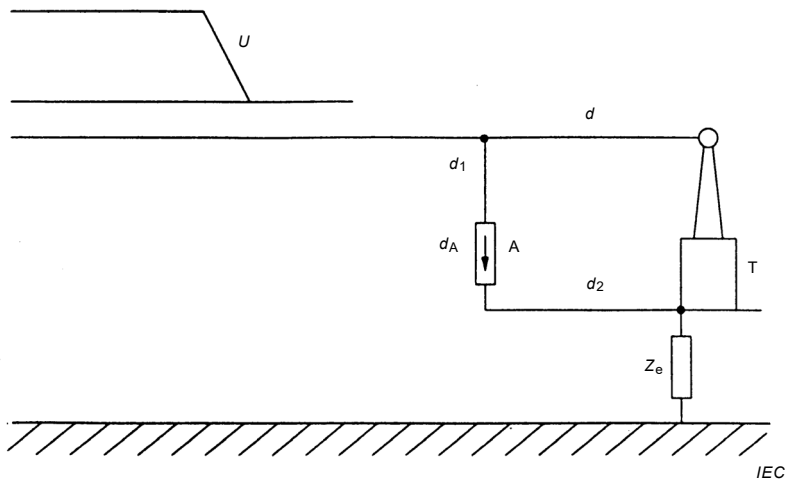

Key

U	incoming surge voltage	d_A	height of arrester
d	length of conductor between transformer bushing and point of connection of arrester line lead	d_2	length of arrester ground lead
A	arrester	Z_e	grounding impedance
A	arrester	T	transformer

Figure 8 – Installations without earth-mat (distribution systems)

Documents
Document Sharing Hub
Full document details: BS EN IEC 60099-5:2018

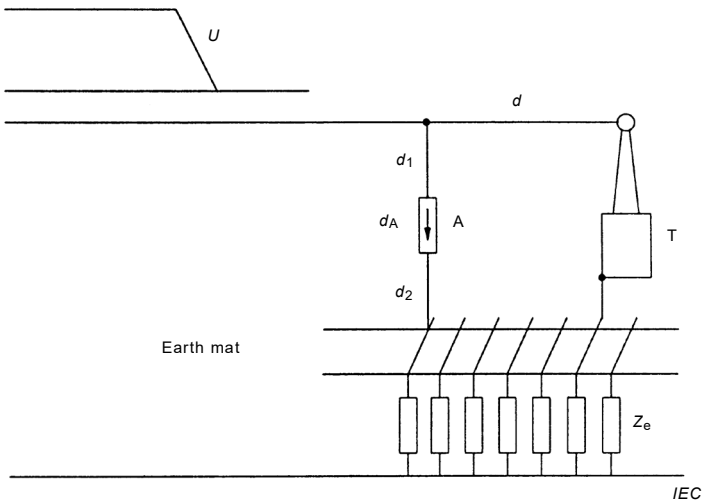

Key

U	incoming surge voltage	d_A	height of arrester
d	length of conductor between transformer bushing and point of connection of arrester line lead	d_2	length of arrester ground lead
d_1	length of arrester line lead	Z_e	grounding impedance
A	arrester	T	transformer

Figure 9 – Installations with earth-mat (high-voltage substations)

The earthing system will affect the protection provided by the arrester. Therefore if the earth system is not solidly earthed, the margin offered for fast-front overvoltages needs to be considered through a study.

In high voltage systems, in particular, $U_S > 245$ kV, it is usually difficult to locate the arresters very close to the equipment. However, every effort shall be made to reduce the separation distance between the arrester and equipment. As a general rule, and for effective overvoltage protection, the separation distance should always be less than 10 m. Common practical separation distances are on average 3 to 5 m, which results in difficulties to establish a direct short connection between the arrester base and the earth terminal of the equipment to be protected. Under such circumstances the arrester is connected to the substation earth grid and effectively bonded to the equipment through the grid. However, without the provision of a low impedance earth connection at these locations, the overvoltage protection afforded by the arrester could be impaired, and high earth potentials could appear on the earthing connections close to the surge arrester itself and at the equipment following the passage of high magnitude, fast-front surge.

It is now well established that fast-front surges will rapidly attenuate in the earthing system, giving a sharp fall in surface earth potential, away from the point of injection. This may result in large voltage differences between close locations on the same earthing system. In order to minimise these potential differences, an earthing connection, as short and straight as possible, should be made between the earthing points of the plant and the arrester. To mitigate the rise of earth potential and help dissipate the surge current in an effective manner, the so-called high frequency rod is an alternative. These rods can be driven to depths of 5 m or deeper depending on the local soil resistivity. The rods allow contact with deeper, low resistivity soil layers, and hence, improve surge current dissipation and reduce the overall earth impedance. When rods are not practical, buried horizontal-conductor counterpoises can be used. If the separation distance is relatively long, the earthing connection should be routed directly underneath the high voltage connection between the arrester and the equipment, which reduces the loop inductance.

Documents
Document Sharing Hub
Full document details: BS EN IEC 60099-5:2018

5.2.5.4.3 Mechanical considerations

Often there is only a vague idea as to the mechanical stress of an arrester in service, and accordingly no requirements are made, or, maybe even worse, required values are too high. If there is no information available about the actual requirements, the F_{min} values in Table 1 can serve as a guideline for the necessary static head loads (F_{min} corresponds to SLL according to IEC 60099-4 – see Figure 10). These values represent absolute minimum requirements assuming that the arrester is connected by strain relieving conductor loops and a wind velocity of 34 m/s (≈ 120 km/h) is not exceeded, which according to IEC 60099-4 belongs to the "normal service conditions". Regarding forces imposed by wind loads, guidance for calculation is given in Clause G.5 of IEC 60099-4:2014.

Besides the static cantilever loads, which normally cause the arrester few problems, dynamic requirements must also be considered. These can, for example, occur as a result of short-circuit currents on the line, or of gusting winds. In this case arresters with porcelain housing can, because of the brittle properties and statistical behaviour of the porcelain, be strained at only up to 40 % of its dynamic strength. The specified permissible dynamic head loads (SSL according to IEC 60099-4) should prove, on the other hand, to have at least a 20 % safety margin to the mean value of the actual breaking values (MBL according to IEC 60099-4), ascertained during tests. The cantilever load values mentioned above are accordingly expanded upon in Table 1.

Sometimes, mechanical strength is given in terms of cantilever strength. In a 420 kV system, for instance, where the arrester height is about 3,5 m, the resulting required static cantilever strength is 1,4 kNm. In a 170 kV system the arrester height is typically 1,7 m, and thus the minimum required static cantilever strength is 680 Nm.

A smaller distance might be adopted, since the polymer housing (with the exception of the cast resin housing, which has brittle characteristics similar to those of porcelain, and thus, is considered in exactly the same manner) diverges less in its mechanical characteristics. As no fixed ratio between dynamic and static load is specified in the standard IEC 60099-4:2014, special care should be taken when comparing catalogue values and technical data sheets. Figure 10 (from IEC 60099-4:2014) shows the different approaches for porcelain and cast resin housed as well as for polymer-housed arresters.

Table 1 – Minimum mechanical requirements (for porcelain-housed arresters)

Highest system voltage U_s (kV)	$F_{min, static}$ (N) ("SLL")	$F_{min, dynamic}$ (N) ("SSL")	Minimum breaking value (mean value) ("MBL") (N)
≤ 420	400	1 000	1 200
550	600	1 500	1 800
800	800	2 000	2 400

Polymer housings, in contrast to porcelain housings, are visibly deflected under the influence of mechanical forces. Generally, this is not a consideration, however, in those cases in which this sort of behaviour would cause problems, choosing a mechanically stiffer housing must be considered, which will be less strained under the loads occurring here, and thus be less deflected.

In particular for polymer-housed arresters, an installation different from the classical "standing upright" base mounted position may be an option, e.g. suspended mounting of the arrester requires only a minimum of mechanical strength of the arrester. However in such a case the whole construction shall be prepared to carry the weight of the arrester, which is often not the case for existing installations. These mounting alternatives shall therefore be considered just in the planning phase.

Documents
Document Sharing Hub
Full document details: BS EN IEC 60099-5:2018