BS EN IEC 61131-9:2022

BSI Standards Publication

Programmable controllers

Part 9: Single-drop digital communication interface for small sensors and actuators (SDCI)

Documents
Document Sharing Hub

Full document details: BS EN IEC 61131-9:2022

National foreword

This British Standard is the UK implementation of EN IEC 61131-9:2022. It is identical to IEC 61131-9:2022. It supersedes BS EN 61131-9:2013, which is withdrawn.

The UK participation in its preparation was entrusted to Technical Committee GEL/65, Measurement and control.

A list of organizations represented on this committee can be obtained on request to its committee manager.

Contractual and legal considerations

This publication has been prepared in good faith, however no representation, warranty, assurance or undertaking (express or implied) is or will be made, and no responsibility or liability is or will be accepted by BSI in relation to the adequacy, accuracy, completeness or reasonableness of this publication. All and any such responsibility and liability is expressly disclaimed to the full extent permitted by the law.

This publication is provided as is, and is to be used at the recipient's own risk.

The recipient is advised to consider seeking professional guidance with respect to its use of this publication.

This publication is not intended to constitute a contract. Users are responsible for its correct application.

© The British Standards Institution 2022
Published by BSI Standards Limited 2022

ISBN 978 0 539 17027 6

ICS 25.040.40; 35.240.50

Compliance with a British Standard cannot confer immunity from legal obligations.

This British Standard was published under the authority of the Standards Policy and Strategy Committee on 30 September 2022.

Amendments/corrigenda issued since publication

Date	Text affected

Documents
Document Sharing Hub

Full document details: BS EN IEC 61131-9:2022

EUROPEAN STANDARD

NORME EUROPÉENNE

EUROPÄISCHE NORM

EN IEC 61131-9

July 2022

ICS 25.040.40; 35.240.50

Supersedes EN 61131-9:2013

English Version

Programmable controllers - Part 9: Single-drop digital communication interface for small sensors and actuators (SDCI) (IEC 61131-9:2022)

Automates programmables - Partie 9: Interface de communication numérique point à point pour les petits capteurs et actionneurs (SDCI) (IEC 61131-9:2022)

Speicherprogrammierbare Steuerungen - Teil 9: Schnittstelle für die Kommunikation mit kleinen Sensoren und Aktoren über eine Punkt-zu-Punkt-Verbindung (IEC 61131-9:2022)

This European Standard was approved by CENELEC on 2022-07-04. CENELEC members are bound to comply with the CEN/CENELEC Internal Regulations which stipulate the conditions for giving this European Standard the status of a national standard without any alteration.

Up-to-date lists and bibliographical references concerning such national standards may be obtained on application to the CEN-CENELEC Management Centre or to any CENELEC member.

This European Standard exists in three official versions (English, French, German). A version in any other language made by translation under the responsibility of a CENELEC member into its own language and notified to the CEN-CENELEC Management Centre has the same status as the official versions.

CENELEC members are the national electrotechnical committees of Austria, Belgium, Bulgaria, Croatia, Cyprus, the Czech Republic, Denmark, Estonia, Finland, France, Germany, Greece, Hungary, Iceland, Ireland, Italy, Latvia, Lithuania, Luxembourg, Malta, the Netherlands, Norway, Poland, Portugal, Republic of North Macedonia, Romania, Serbia, Slovakia, Slovenia, Spain, Sweden, Switzerland, Turkey and the United Kingdom.

European Committee for Electrotechnical Standardization
Comité Européen de Normalisation Electrotechnique
Europäisches Komitee für Elektrotechnische Normung

CEN-CENELEC Management Centre: Rue de la Science 23, B-1040 Brussels

© 2022 CENELEC All rights of exploitation in any form and by any means reserved worldwide for CENELEC Members.

Ref. No. EN IEC 61131-9:2022 E

AVA Documents Document Sharing Hub

Full document details: BS EN IEC 61131-9:2022

European foreword

The text of document 65B/1218/FDIS, future edition 2 of IEC 61131-9, prepared by SC 65B "Measurement and control devices" of IEC/TC 65 "Industrial-process measurement, control and automation" was submitted to the IEC-CENELEC parallel vote and approved by CENELEC as EN IEC 61131-9:2022.

The following dates are fixed:

- latest date by which the document has to be implemented at national level by publication of an identical national standard or by endorsement (dop) 2023-04-04
- latest date by which the national standards conflicting with the document have to be withdrawn (dow) 2025-07-04

This document supersedes EN 61131-9:2013 and all of its amendments and corrigenda (if any).

Attention is drawn to the possibility that some of the elements of this document may be the subject of patent rights. CENELEC shall not be held responsible for identifying any or all such patent rights.

Any feedback and questions on this document should be directed to the users' national committee. A complete listing of these bodies can be found on the CENELEC website.

Endorsement notice

The text of the International Standard IEC 61131-9:2022 was approved by CENELEC as a European Standard without any modification.

In the official version, for Bibliography, the following notes have to be added for the standards indicated:

IEC 60870-5-1	NOTE	Harmonized as EN 60870-5-1
IEC 61158-2	NOTE	Harmonized as EN 61158-2
IEC/TR 62453-61	NOTE	Harmonized as CLC/TR 62453-61
IEC 62443 (series)	NOTE	Harmonized as EN IEC 62443 (series)

Documents
Document Sharing Hub

Full document details: BS EN IEC 61131-9:2022

Annex ZA
(normative)

Normative references to international publications with their corresponding European publications

The following documents are referred to in the text in such a way that some or all of their content constitutes requirements of this document. For dated references, only the edition cited applies. For undated references, the latest edition of the referenced document (including any amendments) applies.

NOTE 1 Where an International Publication has been modified by common modifications, indicated by (mod), the relevant EN/HD applies.

NOTE 2 Up-to-date information on the latest versions of the European Standards listed in this annex is available here: www.cenelec.eu.

Publication	Year	Title	EN/HD	Year
IEC 60664	series	Insulation coordination for equipment within low-voltage supply systems	EN IEC 60664	series
IEC 60947-5-2	-	Low-voltage switchgear and controlgear - Part 5-2: Control circuit devices and switching elements - Proximity switches	EN IEC 60947-5-2	-
IEC 61000-4-2	-	Electromagnetic compatibility (EMC) - Part 4-2: Testing and measurement techniques - Electrostatic discharge immunity test	EN 61000-4-2	-
IEC 61000-4-3	-	Electromagnetic compatibility (EMC) - Part 4-3: Testing and measurement techniques - Radiated, radio-frequency, electromagnetic field immunity test	EN IEC 61000-4-3	-
IEC 61000-4-4	-	Electromagnetic compatibility (EMC) - Part 4-4: Testing and measurement techniques - Electrical fast transient/burst immunity test	EN 61000-4-4	-
IEC 61000-4-5	-	Electromagnetic compatibility (EMC) - Part 4-5: Testing and measurement techniques - Surge immunity test	EN 61000-4-5	-
IEC 61000-4-6	-	Electromagnetic compatibility (EMC) - Part 4-6: Testing and measurement techniques - Immunity to conducted disturbances, induced by radio-frequency fields	EN 61000-4-6	-
IEC 61000-4-11	-	Electromagnetic compatibility (EMC) - Part 4-11: Testing and measurement techniques - Voltage dips, short interruptions and voltage variations immunity tests for equipment with input current up to 16 A per phase	EN IEC 61000-4-11	-
IEC 61000-6-2	-	Electromagnetic compatibility (EMC) - Part 6-2: Generic standards - Immunity standard for industrial environments	EN IEC 61000-6-2	-

AVA Documents
Document Sharing Hub

Full document details: BS EN IEC 61131-9:2022

Publication	Year	Title	EN/HD	Year
IEC 61000-6-4	-	Electromagnetic compatibility (EMC) - Part 6-4: Generic standards - Emission standard for industrial environments	EN IEC 61000-6-4	-
IEC 61010-2-201	-	Safety requirements for electrical equipment for measurement, control, and laboratory use - Part 2-201: Particular requirements for control equipment	EN IEC 61010-2-201	-
IEC 61076-2-101	-	Connectors for electronic equipment - Product requirements - Part 2-101: Circular connectors - Detail specification for M12 connectors with screw-locking	EN 61076-2-101	-
IEC 61131-1	-	Programmable controllers - Part 1: General information	EN 61131-1	-
IEC 61131-2	-	Industrial-process measurement and control - Programmable controllers - Part 2: Equipment requirements and tests	-	-

Documents
Document Sharing Hub

Full document details: BS EN IEC 61131-9:2022

CONTENTS

FOREWORD 20
INTRODUCTION 22
0.1 General 22
0.2 Patent declaration 23
1 Scope 24
2 Normative references 24
3 Terms, definitions, symbols, abbreviated terms, and conventions 25
3.1 Terms and definitions 25
3.2 Symbols and abbreviated terms 29
3.3 Conventions 31
3.3.1 General 31
3.3.2 Service parameters 32
3.3.3 Service procedures 32
3.3.4 Service attributes 32
3.3.5 Figures 33
3.3.6 Tables 33
3.3.7 Transmission octet order 33
3.3.8 Behavioral descriptions 33
4 Overview of SDCI (IO-Link™) 35
4.1 Purpose of technology 35
4.2 Positioning within the automation hierarchy 35
4.3 Wiring, connectors and power 36
4.4 Communication features of SDCI 36
4.5 Role of a Master 39
4.6 SDCI configuration 40
4.7 Mapping to fieldbuses and/or other upper-level systems 40
4.8 Standard structure 40
5 Physical Layer (PL) 41
5.1 General 41
5.1.1 Basics 41
5.1.2 Topology 41
5.2 Physical layer services 42
5.2.1 Overview 42
5.2.2 PL services 43
5.3 Transmitter/Receiver 45
5.3.1 Description method 45
5.3.2 Electrical requirements 45
5.3.3 Timing requirements 50
5.4 Power supply 54
5.4.1 Power supply options 54
5.4.2 Port Class B 55
5.4.3 Power-on requirements 56
5.5 Medium 56
5.5.1 Connectors 56
5.5.2 Cable 57
6 Standard Input and Output (SIO) 58

AVA Documents
Document Sharing Hub

Full document details: BS EN IEC 61131-9:2022

7 Data link layer (DL) ... 59
7.1 General ... 59
7.2 Data link layer services ... 60
7.2.1 DL-B services ... 60
7.2.2 DL-A services ... 71
7.3 Data link layer protocol ... 75
7.3.1 Overview ... 75
7.3.2 DL-mode handler ... 76
7.3.3 Message handler ... 84
7.3.4 Process Data handler ... 92
7.3.5 On-request Data handler ... 95
7.3.6 ISDU handler ... 98
7.3.7 Command handler ... 102
7.3.8 Event handler ... 105
8 Application layer (AL) ... 108
8.1 General ... 108
8.2 Application layer services ... 109
8.2.1 AL services within Master and Device ... 109
8.2.2 AL Services ... 110
8.3 Application layer protocol ... 118
8.3.1 Overview ... 118
8.3.2 On-request Data transfer ... 118
8.3.3 Event processing ... 124
8.3.4 Process Data cycles ... 127
9 System Management (SM) ... 128
9.1 General ... 128
9.2 System Management of the Master ... 128
9.2.1 Overview ... 128
9.2.2 SM Master services ... 130
9.2.3 SM Master protocol ... 135
9.3 System Management of the Device ... 143
9.3.1 Overview ... 143
9.3.2 SM Device services ... 145
9.3.3 SM Device protocol ... 151
10 Device ... 158
10.1 Overview ... 158
10.2 Process Data Exchange (PDE) ... 159
10.3 Parameter Manager (PM) ... 159
10.3.1 General ... 159
10.3.2 Parameter Manager state machine ... 159
10.3.3 Dynamic parameter ... 162
10.3.4 Single parameter ... 162
10.3.5 Block Parameter ... 163
10.3.6 Concurrent parameterization access ... 166
10.3.7 Command handling ... 166
10.4 Data Storage (DS) ... 167
10.4.1 General ... 167
10.4.2 Data Storage state machine ... 167

AVA Documents
Document Sharing Hub

Full document details: BS EN IEC 61131-9:2022

10.4.3 DS configuration ... 169
10.4.4 DS memory space ... 169
10.4.5 DS Index_List ... 169
10.4.6 DS parameter availability ... 170
10.4.7 DS without ISDU ... 170
10.4.8 DS parameter change indication ... 170
10.5 Event Dispatcher (ED) ... 170
10.6 Device features ... 170
10.6.1 General ... 170
10.6.2 Device backward compatibility ... 170
10.6.3 Protocol revision compatibility ... 171
10.6.4 Visual SDCI indication ... 171
10.6.5 Parameter access locking ... 171
10.6.6 Data Storage locking ... 171
10.6.7 Locking of local parameter entries ... 171
10.6.8 Locking of local user interface ... 171
10.6.9 Offset time ... 171
10.6.10 Data Storage concept ... 172
10.6.11 Block Parameter ... 172
10.7 Device reset options ... 172
10.7.1 Overview ... 172
10.7.2 Device reset ... 173
10.7.3 Application reset ... 173
10.7.4 Restore factory settings ... 174
10.7.5 Back-to-box ... 174
10.8 Device design rules and constraints ... 174
10.8.1 General ... 174
10.8.2 Process Data ... 174
10.8.3 Communication loss ... 175
10.8.4 Direct Parameter ... 175
10.8.5 ISDU communication channel ... 175
10.8.6 DeviceID rules related to Device variants ... 175
10.8.7 Protocol constants ... 176
10.9 IO Device description (IODD) ... 176
10.10 Device diagnosis ... 176
10.10.1 Concepts ... 176
10.10.2 Events ... 177
10.10.3 Visual indicators ... 178
10.11 Device connectivity ... 179
11 Master ... 179
11.1 Overview ... 179
11.1.1 Positioning of Master and Gateway Applications ... 179
11.1.2 Structure, applications, and services of a Master ... 180
11.1.3 Object view of a Master and its Ports ... 181
11.2 Services of the Standardized Master Interface (SMI) ... 182
11.2.1 Overview ... 182
11.2.2 Structure of SMI service arguments ... 183
11.2.3 Concurrency and prioritization of SMI services ... 184
11.2.4 SMI_MasterIdentification ... 185

AVA Documents
Document Sharing Hub
Full document details: BS EN IEC 61131-9:2022

11.2.5 SMI_PortConfiguration ... 186
11.2.6 SMI_ReadbackPortConfiguration ... 187
11.2.7 SMI_PortStatus ... 189
11.2.8 SMI_DSToParServ ... 190
11.2.9 SMI_ParServToDS ... 191
11.2.10 SMI_DeviceWrite ... 193
11.2.11 SMI_DeviceRead ... 194
11.2.12 SMI_ParamWriteBatch ... 195
11.2.13 SMI_ParamReadBatch ... 197
11.2.14 SMI_PortPowerOffOn ... 198
11.2.15 SMI_DeviceEvent ... 200
11.2.16 SMI_PortEvent ... 201
11.2.17 SMI_PDIn ... 201
11.2.18 SMI_PDOut ... 203
11.2.19 SMI_PDInOut ... 204
11.2.20 SMI_PDInIQ ... 205
11.2.21 SMI_PDOutIQ ... 207
11.2.22 SMI_PDReadbackOutIQ ... 208
11.3 Configuration Manager (CM) ... 209
11.3.1 Coordination of Master applications ... 209
11.3.2 State machine of the Configuration Manager ... 212
11.4 Data Storage (DS) ... 217
11.4.1 Overview ... 217
11.4.2 DS data object ... 217
11.4.3 Backup and Restore ... 217
11.4.4 DS state machine ... 217
11.4.5 Parameter selection for Data Storage ... 224
11.5 On-request Data exchange (ODE) ... 224
11.6 Diagnosis Unit (DU) ... 225
11.6.1 General ... 225
11.6.2 Device specific Events ... 226
11.6.3 Port specific Events ... 226
11.6.4 Dynamic diagnosis status ... 227
11.6.5 Best practice recommendations ... 227
11.7 PD Exchange (PDE) ... 228
11.7.1 General ... 228
11.7.2 Process Data input mapping ... 228
11.7.3 Process Data output mapping ... 229
11.7.4 Process Data invalid/valid qualifier status ... 230
12 Holistic view on Data Storage ... 231
12.1 User point of view ... 231
12.2 Operations and preconditions ... 232
12.2.1 Purpose and objectives ... 232
12.2.2 Preconditions for the activation of the Data Storage mechanism ... 232
12.2.3 Preconditions for the types of Devices to be replaced ... 232
12.2.4 Preconditions for the parameter sets ... 232
12.3 Commissioning ... 233
12.3.1 On-line commissioning ... 233
12.3.2 Off-site commissioning ... 233

Documents
Document Sharing Hub
Full document details: BS EN IEC 61131-9:2022

12.4 Backup Levels ... 234
12.4.1 Purpose ... 234
12.4.2 Overview ... 234
12.4.3 Commissioning ("Disable") ... 235
12.4.4 Production ("Backup/Restore") ... 235
12.4.5 Production ("Restore") ... 236
12.5 Use cases ... 236
12.5.1 Device replacement ("Backup/Restore") ... 236
12.5.2 Device replacement ("Restore") ... 236
12.5.3 Master replacement ... 236
12.5.4 Project replication ... 237
13 Integration ... 237
13.1 Generic Master model for system integration ... 237
13.2 Role of gateway applications ... 238
13.2.1 Clients ... 238
13.2.2 Coordination ... 238
13.3 Security ... 238
13.4 Special gateway applications ... 238
13.4.1 Changing Device configuration including Data Storage ... 238
13.4.2 Parameter server and recipe control ... 239
13.5 Port and Device Configuration Tool (PDCT) ... 239
13.5.1 Strategy ... 239
13.5.2 Accessing Masters via SMI ... 239
13.5.3 Basic layout examples ... 239
Annex A (normative) Codings, timing constraints, and errors ... 241
A.1 General structure and encoding of M-sequences ... 241
A.1.1 Overview ... 241
A.1.2 M-sequence control (MC) ... 241
A.1.3 Checksum/M-sequence type (CKT) ... 242
A.1.4 User data (PD or OD) ... 242
A.1.5 Checksum/status (CKS) ... 243
A.1.6 Calculation of the checksum ... 244
A.2 M-sequence types ... 245
A.2.1 Overview ... 245
A.2.2 M-sequence TYPE_0 ... 245
A.2.3 M-sequence TYPE_1_x ... 245
A.2.4 M-sequence TYPE_2_x ... 247
A.2.5 M-sequence type 3 ... 249
A.2.6 M-sequence type usage for STARTUP, PREOPERATE and OPERATE modes ... 249
A.3 Timing constraints ... 251
A.3.1 General ... 251
A.3.2 Bit time ... 251
A.3.3 UART frame transmission delay of Master (Ports) ... 251
A.3.4 UART frame transmission delay of Devices ... 251
A.3.5 Response time of Devices ... 251
A.3.6 M-sequence time ... 251
A.3.7 Cycle time ... 252
A.3.8 Idle time ... 253

AVA Documents
Document Sharing Hub
Full document details: BS EN IEC 61131-9:2022

A.3.9 Recovery time ... 253
A.4 Errors and remedies ... 253
A.4.1 UART errors ... 253
A.4.2 Wake-up errors ... 253
A.4.3 Transmission errors ... 253
A.4.4 Protocol errors ... 254
A.5 General structure and encoding of ISDUs ... 254
A.5.1 Overview ... 254
A.5.2 I-Service ... 254
A.5.3 Extended length (ExtLength) ... 255
A.5.4 Index and Subindex ... 256
A.5.5 Data ... 256
A.5.6 Check ISDU (CHKPDU) ... 256
A.5.7 ISDU examples ... 257
A.6 General structure and encoding of Events ... 259
A.6.1 General ... 259
A.6.2 StatusCode type 1 (no details) ... 259
A.6.3 StatusCode type 2 (with details) ... 260
A.6.4 EventQualifier ... 261
A.6.5 EventCode ... 262
Annex B (normative) Parameters and commands ... 263
B.1 Direct Parameter pages 1 and 2 ... 263
B.1.1 Overview ... 263
B.1.2 MasterCommand ... 264
B.1.3 MasterCycleTime and MinCycleTime ... 265
B.1.4 M-sequenceCapability ... 266
B.1.5 RevisionID (RID) ... 267
B.1.6 ProcessDataIn ... 267
B.1.7 ProcessDataOut ... 268
B.1.8 VendorID (VID) ... 268
B.1.9 DeviceID (DID) ... 268
B.1.10 FunctionID (FID) ... 268
B.1.11 SystemCommand ... 269
B.1.12 Device specific Direct Parameter page 2 ... 269
B.2 Predefined Device parameters ... 269
B.2.1 Overview ... 269
B.2.2 SystemCommand ... 272
B.2.3 DataStorageIndex ... 273
B.2.4 DeviceAccessLocks ... 274
B.2.5 ProfileCharacteristic ... 276
B.2.6 PDInputDescriptor ... 276
B.2.7 PDOutputDescriptor ... 276
B.2.8 VendorName ... 276
B.2.9 VendorText ... 276
B.2.10 ProductName ... 276
B.2.11 ProductID ... 276
B.2.12 ProductText ... 276
B.2.13 SerialNumber ... 277
B.2.14 HardwareRevision ... 277

Documents
Document Sharing Hub
Full document details: BS EN IEC 61131-9:2022

B.2.15 FirmwareRevision ... 277
B.2.16 ApplicationSpecificTag ... 277
B.2.17 FunctionTag ... 277
B.2.18 LocationTag ... 277
B.2.19 ErrorCount ... 277
B.2.20 DeviceStatus ... 277
B.2.21 DetailedDeviceStatus ... 278
B.2.22 ProcessDataInput ... 279
B.2.23 ProcessDataOutput ... 279
B.2.24 OffsetTime ... 279
B.2.25 Profile parameter (reserved) ... 280
B.2.26 Preferred Index ... 280
B.2.27 Extended Index ... 280
B.2.28 Profile specific Index (reserved) ... 280
Annex C (normative) ErrorTypes (ISDU errors) ... 281
C.1 General ... 281
C.2 Application related ErrorTypes ... 281
C.2.1 Overview ... 281
C.2.2 Device application error – no details ... 282
C.2.3 Index not available ... 282
C.2.4 Subindex not available ... 282
C.2.5 Service temporarily not available ... 282
C.2.6 Service temporarily not available – local control ... 282
C.2.7 Service temporarily not available – device control ... 282
C.2.8 Access denied ... 282
C.2.9 Parameter value out of range ... 282
C.2.10 Parameter value above limit ... 282
C.2.11 Parameter value below limit ... 282
C.2.12 Parameter length overrun ... 283
C.2.13 Parameter length underrun ... 283
C.2.14 Function not available ... 283
C.2.15 Function temporarily unavailable ... 283
C.2.16 Invalid parameter set ... 283
C.2.17 Inconsistent parameter set ... 283
C.2.18 Application not ready ... 283
C.2.19 Vendor specific ... 283
C.3 Derived ErrorTypes ... 283
C.3.1 Overview ... 283
C.3.2 Master – Communication error ... 284
C.3.3 Master – ISDU timeout ... 284
C.3.4 Device Event – ISDU error ... 284
C.3.5 Device Event – ISDU illegal service primitive ... 284
C.3.6 Master – ISDU checksum error ... 284
C.3.7 Master – ISDU illegal service primitive ... 284
C.3.8 Device Event – ISDU buffer overflow ... 284
C.4 SMI related ErrorTypes ... 285
C.4.1 Overview ... 285
C.4.2 ArgBlock unknown ... 285
C.4.3 Incorrect ArgBlock content type ... 285

AVA Documents
Document Sharing Hub
Full document details: BS EN IEC 61131-9:2022

C.4.4 Device not communicating ... 285
C.4.5 Service unknown ... 285
C.4.6 Process Data not accessible ... 285
C.4.7 Insufficient memory ... 285
C.4.8 Incorrect Port number ... 285
C.4.9 Incorrect ArgBlock length ... 286
C.4.10 Master busy ... 286
C.4.11 Inconsistent DS data ... 286
C.4.12 Device or Master error ... 286
Annex D (normative) EventCodes (diagnosis information) ... 287
D.1 General ... 287
D.2 EventCodes for Devices ... 287
D.3 EventCodes for Ports ... 289
Annex E (normative) Coding of ArgBlocks ... 291
E.1 General ... 291
E.2 MasterIdent ... 292
E.3 PortConfigList ... 293
E.4 PortStatusList ... 295
E.5 On-request_Data ... 297
E.6 DS_Data ... 298
E.7 DeviceParBatch ... 298
E.8 IndexList ... 299
E.9 PortPowerOffOn ... 299
E.10 PDIn ... 299
E.11 PDOut ... 300
E.12 PDInOut ... 300
E.13 PDInIQ ... 301
E.14 PDOutIQ ... 301
E.15 DeviceEvent ... 302
E.16 PortEvent ... 302
E.17 VoidBlock ... 302
E.18 JobError ... 303
Annex F (normative) Data types ... 304
F.1 General ... 304
F.2 Basic data types ... 304
F.2.1 General ... 304
F.2.2 BooleanT ... 304
F.2.3 UIntegerT ... 304
F.2.4 IntegerT ... 305
F.2.5 Float32T ... 307
F.2.6 StringT ... 308
F.2.7 OctetStringT ... 308
F.2.8 TimeT ... 309
F.2.9 TimeSpanT ... 310
F.3 Composite data types ... 311
F.3.1 General ... 311
F.3.2 ArrayT ... 311
F.3.3 RecordT ... 311
Annex G (normative) Structure of the Data Storage data object ... 315

AVA Documents
Document Sharing Hub

Annex H (normative) Master and Device conformity ... 316
H.1 Electromagnetic compatibility (EMC) requirements ... 316
H.1.1 General ... 316
H.1.2 Operating conditions ... 316
H.1.3 Performance criteria ... 316
H.1.4 Required immunity tests ... 317
H.1.5 Required emission tests ... 318
H.1.6 Test configurations for Master ... 318
H.1.7 Test configurations for Devices ... 320
H.2 Test strategies for conformity ... 321
H.2.1 Test of a Device ... 321
H.2.2 Test of a Master ... 322
Annex I (informative) Residual error probabilities ... 323
I.1 Residual error probability of the SDCI data integrity mechanism ... 323
I.2 Derivation of EMC test conditions ... 323
Annex J (informative) Example sequence of an ISDU transmission ... 325
Annex K (informative) Recommended methods for detecting parameter changes ... 327
K.1 CRC signature ... 327
K.2 Revision counter ... 327
Bibliography ... 328

Figure 1 – Example of a confirmed service ... 33
Figure 2 – Memory storage and transmission order for WORD based data types ... 33
Figure 3 – Example of a nested state ... 34
Figure 4 – SDCI compatibility with IEC 61131-2 ... 35
Figure 5 – Domain of the SDCI technology within the automation hierarchy ... 35
Figure 6 – Generic Device model for SDCI (Master's view) ... 37
Figure 7 – Relationship between nature of data and transmission types ... 38
Figure 8 – Object transfer at the application layer level (AL) ... 39
Figure 9 – Logical structure of Master and Device ... 40
Figure 10 – Three wire connection system ... 41
Figure 11 – Topology of SDCI ... 42
Figure 12 – Physical layer (Master) ... 42
Figure 13 – Physical layer (Device) ... 43
Figure 14 – Line driver reference schematics ... 45
Figure 15 – Receiver reference schematics ... 45
Figure 16 – Reference schematics for SDCI 3-wire connection system ... 46
Figure 17 – Voltage level definitions ... 46
Figure 18 – Switching thresholds ... 47
Figure 19 – Inrush current and charge (example) ... 48
Figure 20 – Power-on timing for Power 1 ... 50
Figure 21 – Format of an SDCI UART frame ... 50
Figure 22 – Eye diagram for the 'H' and 'L' detection ... 51
Figure 23 – Eye diagram for the correct detection of a UART frame ... 52
Figure 24 – Wake-up request ... 53

AVA Documents
Document Sharing Hub

Full document details: BS EN IEC 61131-9:2022

Figure 25 – Class A and B Port definitions 55
Figure 26 – Pin layout front view 57
Figure 27 – Reference schematics for effective line capacitance and loop resistance 58
Figure 28 – Structure and services of the data link layer (Master) 59
Figure 29 – Structure and services of the data link layer (Device) 60
Figure 30 – State machines of the data link layer 76
Figure 31 – Example of an attempt to establish communication 76
Figure 32 – Failed attempt to establish communication 77
Figure 33 – Retry strategy to establish communication 78
Figure 34 – Fallback procedure 79
Figure 35 – State machine of the Master DL-mode handler 80
Figure 36 – Submachine 1 to establish communication 80
Figure 37 – State machine of the Device DL-mode handler 83
Figure 38 – SDCI message sequences 85
Figure 39 – Overview of M-sequence types 86
Figure 40 – State machine of the Master message handler 87
Figure 41 – Submachine "Response 3" of the message handler 88
Figure 42 – Submachine "Response 8" of the message handler 88
Figure 43 – Submachine "Response 15" of the message handler 88
Figure 44 – State machine of the Device message handler 91
Figure 45 – Interleave mode for the segmented transmission of Process Data 93
Figure 46 – State machine of the Master Process Data handler 93
Figure 47 – State machine of the Device Process Data handler 94
Figure 48 – State machine of the Master On-request Data handler 96
Figure 49 – State machine of the Device On-request Data handler 97
Figure 50 – Structure of the ISDU 98
Figure 51 – State machine of the Master ISDU handler 100
Figure 52 – State machine of the Device ISDU handler 101
Figure 53 – State machine of the Master command handler 103
Figure 54 – State machine of the Device command handler 104
Figure 55 – State machine of the Master Event handler 106
Figure 56 – State machine of the Device Event handler 107
Figure 57 – Structure and services of the application layer (Master) 109
Figure 58 – Structure and services of the application layer (Device) 109
Figure 59 – OD state machine of the Master AL 119
Figure 60 – OD state machine of the Device AL 121
Figure 61 – Sequence diagram for the transmission of On-request Data 122
Figure 62 – Sequence diagram for On-request Data in case of errors 123
Figure 63 – Sequence diagram for On-request Data in case of timeout 123
Figure 64 – Event state machine of the Master AL 124
Figure 65 – Event state machine of the Device AL 125
Figure 66 – Single Event scheduling 126
Figure 67 – Sequence diagram for output Process Data 127

AVA Documents
Document Sharing Hub
Full document details: BS EN IEC 61131-9:2022

Figure 68 – Sequence diagram for input Process Data 128
Figure 69 – Structure and services of the Master System Management 129
Figure 70 – Sequence chart of the use case "Port x setup" 130
Figure 71 – Main state machine of the Master System Management 136
Figure 72 – SM Master submachine CheckCompatibility_1 138
Figure 73 – Activity for state "CheckVxy" 140
Figure 74 – Activity for state "CheckCompV10" 140
Figure 75 – Activity for state "CheckComp" 141
Figure 76 – Activity (write parameter) in state "RestartDevice" 141
Figure 77 – SM Master submachine checkSerNum_3 142
Figure 78 – Activity (check SerialNumber) for state CheckSerNum_31 143
Figure 79 – Structure and services of the System Management (Device) 144
Figure 80 – Sequence chart of the use case "INACTIVE – SIO – SDCI – SIO" 145
Figure 81 – State machine of the Device System Management 152
Figure 82 – Sequence chart of a regular Device startup 155
Figure 83 – Sequence chart of a Device startup in compatibility mode 156
Figure 84 – Sequence chart of a Device startup when compatibility fails 157
Figure 85 – Structure and services of a Device 158
Figure 86 – Parameter Manager (PM) state machine 160
Figure 87 – Positive and negative parameter checking result 162
Figure 88 – Positive Block Parameter download with Data Storage request 164
Figure 89 – Negative Block Parameter download 165
Figure 90 – Data Storage (DS) state machine 167
Figure 91 – Data Storage request message sequence 169
Figure 92 – Cycle timing 172
Figure 93 – Event flow in case of successive errors 178
Figure 94 – Device LED indicator timing 179
Figure 95 – Generic relationship of SDCI and automation technology 180
Figure 96 – Structure, applications and services of a Master 181
Figure 97 – Object model of Master and Ports 182
Figure 98 – SMI services 182
Figure 99 – Coordination of Master applications 210
Figure 100 – Sequence diagram of start-up via Configuration Manager 212
Figure 101 – State machine of the Configuration Manager 213
Figure 102 – Activity for state "CheckPortMode_0" 216
Figure 103 – Main state machine of the Data Storage mechanism 218
Figure 104 – Submachine "UpDownload_2" of the Data Storage mechanism 219
Figure 105 – Data Storage submachine "Upload_7" 220
Figure 106 – Data Storage upload sequence diagram 220
Figure 107 – Data Storage submachine "Download_10" 221
Figure 108 – Data Storage download sequence diagram 221
Figure 109 – State machine of the On-request Data Exchange 225
Figure 110 – DeviceEvent flow control 226

AVA Documents
Document Sharing Hub

Full document details: BS EN IEC 61131-9:2022

Figure 111 – Port Event flow control ... 226
Figure 112 – SDCI diagnosis information propagation via Events ... 227
Figure 113 – Principles of Process Data Input mapping ... 228
Figure 114 – Port Qualifier Information (PQI) ... 229
Figure 115 – Principles of Process Data Output mapping ... 230
Figure 116 – Propagation of PD qualifier status between Master and Device ... 231
Figure 117 – Active and backup parameter ... 233
Figure 118 – Off-site commissioning ... 233
Figure 119 – Generic Master model for system integration ... 238
Figure 120 – PDCT via gateway application ... 239
Figure 121 – Example 1 of a PDCT display layout ... 240
Figure 122 – Example 2 of a PDCT display layout ... 240
Figure A.1 – M-sequence control ... 241
Figure A.2 – Checksum/M-sequence type octet ... 242
Figure A.3 – Checksum/status octet ... 243
Figure A.4 – Principle of the checksum calculation and compression ... 244
Figure A.5 – M-sequence TYPE_0 ... 245
Figure A.6 – M-sequence TYPE_1_1 ... 245
Figure A.7 – M-sequence TYPE_1_2 ... 246
Figure A.8 – M-sequence TYPE_1_V ... 246
Figure A.9 – M-sequence TYPE_2_1 ... 247
Figure A.10 – M-sequence TYPE_2_2 ... 247
Figure A.11 – M-sequence TYPE_2_3 ... 248
Figure A.12 – M-sequence TYPE_2_4 ... 248
Figure A.13 – M-sequence TYPE_2_5 ... 248
Figure A.14 – M-sequence TYPE_2_V ... 249
Figure A.15 – M-sequence timing ... 252
Figure A.16 – I-Service octet ... 254
Figure A.17 – Check of ISDU integrity via CHKPDU ... 257
Figure A.18 – Examples of request formats for ISDUs ... 257
Figure A.19 – Examples of response ISDUs ... 258
Figure A.20 – Examples of read and write request ISDUs ... 259
Figure A.21 – Structure of StatusCode type 1 ... 259
Figure A.22 – Structure of StatusCode type 2 ... 260
Figure A.23 – Indication of activated Events ... 261
Figure A.24 – Structure of the EventQualifier ... 261
Figure B.1 – Classification and mapping of Direct Parameters ... 263
Figure B.2 – MinCycleTime ... 265
Figure B.3 – M-sequenceCapability ... 266
Figure B.4 – RevisionID ... 267
Figure B.5 – ProcessDataIn ... 267
Figure B.6 – Index space for ISDU data objects ... 269
Figure B.7 – Structure of the OffsetTime ... 270

AVA Documents
Document Sharing Hub
Full document details: BS EN IEC 61131-9:2022

Figure E.1 – Assignment of ArgBlock identifiers 291
Figure F.1 – Coding example of small UIntegerT 305
Figure F.2 – Coding example of large UIntegerT 305
Figure F.3 – Coding examples of IntegerT 307
Figure F.4 – Singular access of StringT 308
Figure F.5 – Coding example of OctetStringT 309
Figure F.6 – Definition of TimeT 309
Figure F.7 – Example of an ArrayT data structure 311
Figure F.8 – Example 2 of a RecordT structure 313
Figure F.9 – Example 3 of a RecordT structure 313
Figure F.10 – Write requests for Example 3 314
Figure H.1 – Test setup for electrostatic discharge (Master) 319
Figure H.2 – Test setup for RF electromagnetic field (Master) 319
Figure H.3 – Test setup for fast transients (Master) 319
Figure H.4 – Test setup for RF common mode (Master) 320
Figure H.5 – Test setup for electrostatic discharges (Device) 320
Figure H.6 – Test setup for RF electromagnetic field (Device) 321
Figure H.7 – Test setup for fast transients (Device) 321
Figure H.8 – Test setup for RF common mode (Device) 321
Figure I.1 – Residual error probability for the SDCI data integrity mechanism 323
Figure J.1 – Example for ISDU transmissions 325

Table 1 – Service assignments of Master and Device 43
Table 2 – PL_SetMode 43
Table 3 – PL_WakeUp 44
Table 4 – PL_Transfer 44
Table 5 – Electrical characteristics of a receiver 47
Table 6 – Electrical characteristics of a Master Port 48
Table 7 – Electrical characteristics of a Device 49
Table 8 – Power-on timing 50
Table 9 – Dynamic characteristics of the transmission 52
Table 10 – Wake-up request characteristics 54
Table 11 – Electrical characteristics of a Master Port Class B 55
Table 12 – Master pin assignments 56
Table 13 – Device pin assignments 57
Table 14 – Cable characteristics 58
Table 15 – Cable conductor assignments 58
Table 16 – Service assignments within Master and Device 61
Table 17 – DL_ReadParam 61
Table 18 – DL_WriteParam 62
Table 19 – DL_Read 63
Table 20 – DL_Write 63
Table 21 – DL_ISDUTransport 64

AVA Documents
Document Sharing Hub

Table 22 – DL_ISDUAbort ... 65
Table 23 – DL_PDOutputUpdate ... 65
Table 24 – DL_PDOutputTransport ... 66
Table 25 – DL_PDInputUpdate ... 66
Table 26 – DL_PDInputTransport ... 67
Table 27 – DL_PDCycle ... 67
Table 28 – DL_SetMode ... 68
Table 29 – DL_Mode ... 69
Table 30 – DL_Event ... 69
Table 31 – DL_EventConf ... 70
Table 32 – DL_EventTrigger ... 70
Table 33 – DL_Control ... 70
Table 34 – DL-A services within Master and Device ... 71
Table 35 – OD ... 72
Table 36 – PD ... 73
Table 37 – EventFlag ... 74
Table 38 – PDInStatus ... 74
Table 39 – MHInfo ... 74
Table 40 – ODTrig ... 75
Table 41 – PDTrig ... 75
Table 42 – Wake-up procedure and retry characteristics ... 78
Table 43 – Fallback timing characteristics ... 79
Table 44 – State transition table of the Master DL-mode handler ... 81
Table 45 – State transition table of the Device DL-mode handler ... 83
Table 46 – State transition table of the Master message handler ... 89
Table 47 – State transition table of the Device message handler ... 92
Table 48 – State transition table of the Master Process Data handler ... 94
Table 49 – State transition table of the Device Process Data handler ... 95
Table 50 – State transition table of the Master On-request Data handler ... 96
Table 51 – State transition table of the Device On-request Data handler ... 97
Table 52 – FlowCTRL definitions ... 99
Table 53 – State transition table of the Master ISDU handler ... 100
Table 54 – State transition table of the Device ISDU handler ... 102
Table 55 – Control codes ... 103
Table 56 – State transition table of the Master command handler ... 103
Table 57 – State transition table of the Device command handler ... 105
Table 58 – Event memory ... 105
Table 59 – State transition table of the Master Event handler ... 107
Table 60 – State transition table of the Device Event handler ... 108
Table 61 – AL services within Master and Device ... 110
Table 62 – AL_Read ... 110
Table 63 – AL_Write ... 111
Table 64 – AL_Abort ... 112

AVA Documents
Document Sharing Hub

Full document details: BS EN IEC 61131-9:2022

Table 65 – AL_GetInput ... 113
Table 66 – AL_NewInput ... 114
Table 67 – AL_SetInput ... 114
Table 68 – AL_PDCycle ... 114
Table 69 – AL_GetOutput ... 115
Table 70 – AL_NewOutput ... 115
Table 71 – AL_SetOutput ... 116
Table 72 – AL_Event ... 117
Table 73 – AL_Control ... 118
Table 74 – States and transitions for the OD state machine of the Master AL ... 119
Table 75 – States and transitions for the OD state machine of the Device AL ... 121
Table 76 – State and transitions of the Event state machine of the Master AL ... 124
Table 77 – State and transitions of the Event state machine of the Device AL ... 125
Table 78 – SM services within the Master ... 131
Table 79 – SM_SetPortConfig ... 131
Table 80 – Definition of the InspectionLevel (IL) ... 132
Table 81 – Definitions of the Target Modes ... 132
Table 82 – SM_GetPortConfig ... 133
Table 83 – SM_PortMode ... 134
Table 84 – SM_Operate ... 135
Table 85 – State transition table of the Master System Management ... 137
Table 86 – State transition table of the Master submachine CheckCompatibility_1 ... 139
Table 87 – State transition table of the Master submachine checkSerNum_3 ... 142
Table 88 – SM services within the Device ... 146
Table 89 – SM_SetDeviceCom ... 146
Table 90 – SM_GetDeviceCom ... 147
Table 91 – SM_SetDeviceIdent ... 148
Table 92 – SM_GetDeviceIdent ... 149
Table 93 – SM_SetDeviceMode ... 150
Table 94 – SM_DeviceMode ... 150
Table 95 – State transition table of the Device System Management ... 153
Table 96 – State transition table of the PM state machine ... 160
Table 97 – Sequence of parameter checks ... 163
Table 98 – Steps and rules for Block Parameter checking ... 165
Table 99 – Prioritized ISDU responses on command parameters ... 166
Table 100 – State transition table of the Data Storage state machine ... 168
Table 101 – Overview on reset options and their impact on Devices ... 173
Table 102 – Overview of the protocol constants for Devices ... 176
Table 103 – Classification of Device diagnosis incidents ... 177
Table 104 – Timing for LED indicators ... 179
Table 105 – SMI services ... 183
Table 106 – SMI_MasterIdentification ... 185
Table 107 – SMI_PortConfiguration ... 186

AVA Documents
Document Sharing Hub

Table 108 – SMI_ReadbackPortConfiguration 188
Table 109 – SMI_PortStatus 189
Table 110 – SMI_DSToParServ 190
Table 111 – SMI_ParServToDS 192
Table 112 – SMI_DeviceWrite 193
Table 113 – SMI_DeviceRead 194
Table 114 – SMI_ParamWriteBatch 196
Table 115 – SMI_ParamReadBatch 197
Table 116 – SMI_PortPowerOffOn 199
Table 117 – SMI_DeviceEvent 200
Table 118 – SMI_PortEvent 201
Table 119 – SMI_PDIn 202
Table 120 – SMI_PDOut 203
Table 121 – SMI_PDInOut 204
Table 122 – SMI_PDInIQ 206
Table 123 – SMI_PDOutIQ 207
Table 124 – SMI_PDReadbackOutIQ 208
Table 125 – Internal variables and Events controlling Master applications 210
Table 126 – State transition table of the Configuration Manager 213
Table 127 – States and transitions of the Data Storage state machines 222
Table 128 – State transition table of the ODE state machine 225
Table 129 – Recommended Data Storage Backup Levels 234
Table 130 – Criteria for backing up parameters ("Backup/Restore") 235
Table 131 – Criteria for backing up parameters ("Restore") 236
Table A.1 – Values of communication channel 241
Table A.2 – Values of R/W 242
Table A.3 – Values of M-sequence types 242
Table A.4 – Data types for user data 243
Table A.5 – Values of PD status 243
Table A.6 – Values of the Event flag 244
Table A.7 – M-sequence types for the STARTUP mode 249
Table A.8 – M-sequence types for the PREOPERATE mode 249
Table A.9 – M-sequence types for the OPERATE mode (legacy protocol) 250
Table A.10 – M-sequence types for the OPERATE mode 250
Table A.11 – Recommended MinCycleTimes 252
Table A.12 – Definition of the nibble "I-Service" 255
Table A.13 – ISDU syntax 255
Table A.14 – Definition of nibble Length and octet ExtLength 256
Table A.15 – Use of Index formats 256
Table A.16 – Mapping of EventCodes (type 1) 260
Table A.17 – Values of INSTANCE 261
Table A.18 – Values of SOURCE 262
Table A.19 – Values of TYPE 262

AVA Documents
Document Sharing Hub

Table A.20 – Values of MODE 262
Table B.1 – Direct Parameter pages 1 and 2 264
Table B.2 – Types of MasterCommands 265
Table B.3 – Possible values of MasterCycleTime and MinCycleTime 266
Table B.4 – Values of ISDU 266
Table B.5 – Values of SIO 268
Table B.6 – Permitted combinations of BYTE and Length 268
Table B.7 – Implementation rules for parameters and commands 270
Table B.8 – Index assignment of data objects (Device parameter) 270
Table B.9 – Coding of SystemCommand (ISDU) 272
Table B.10 – DataStorageIndex assignments 273
Table B.11 – Structure of Index_List 274
Table B.12 – Device locking possibilities 275
Table B.13 – DeviceStatus parameter 278
Table B.14 – DetailedDeviceStatus (Index 0x0025) 279
Table B.15 – Time base coding and values of OffsetTime 280
Table C.1 – ErrorTypes 281
Table C.2 – Derived ErrorTypes 284
Table C.3 – SMI related ErrorTypes 285
Table D.1 – EventCodes for Devices 287
Table D.2 – EventCodes for Ports 289
Table E.1 – ArgBlock types and their ArgBlockIDs 292
Table E.2 – MasterIdent 293
Table E.3 – PortConfigList 294
Table E.4 – PortStatusList 296
Table E.5 – On-request_Data 297
Table E.6 – DS_Data 298
Table E.7 – DeviceParBatch 298
Table E.8 – IndexList 299
Table E.9 – PortPowerOffOn 299
Table E.10 – PDIn 300
Table E.11 – PDOut 300
Table E.12 – PDInOut 301
Table E.13 – PDInIQ 301
Table E.14 – PDOutIQ 302
Table E.15 – DeviceEvent 302
Table E.16 – PortEvent 302
Table E.17 – VoidBlock 303
Table E.18 – JobError 303
Table F.1 – BooleanT 304
Table F.2 – BooleanT coding 304
Table F.3 – UIntegerT 305
Table F.4 – IntegerT 305

AVA Documents
Document Sharing Hub

Full document details: BS EN IEC 61131-9:2022

Table F.5 – IntegerT coding (8 octets) ... 306
Table F.6 – IntegerT coding (4 octets) ... 306
Table F.7 – IntegerT coding (2 octets) ... 306
Table F.8 – IntegerT coding (1 octet) ... 306
Table F.9 – Float32T ... 307
Table F.10 – Coding of Float32T ... 307
Table F.11 – StringT ... 308
Table F.12 – OctetStringT ... 308
Table F.13 – TimeT ... 309
Table F.14 – Coding of TimeT ... 310
Table F.15 – TimeSpanT ... 310
Table F.16 – Coding of TimeSpanT ... 310
Table F.17 – Structuring rules for ArrayT ... 311
Table F.18 – Example for the access of an ArrayT ... 311
Table F.19 – Structuring rules for RecordT ... 312
Table F.20 – Example 1 for the access of a RecordT ... 312
Table F.21 – Example 2 for the access of a RecordT ... 312
Table F.22 – Example 3 for the access of a RecordT ... 313
Table G.1 – Structure of the stored DS data object ... 315
Table G.2 – Associated header information for stored DS data objects ... 315
Table H.1 – EMC test conditions for SDCI ... 317
Table H.2 – EMC test levels ... 317
Table K.1 – Proper CRC generator polynomials ... 327

Documents
Document Sharing Hub

Full document details: BS EN IEC 61131-9:2022

INTERNATIONAL ELECTROTECHNICAL COMMISSION

PROGRAMMABLE CONTROLLERS –

Part 9: Single-drop digital communication interface for small sensors and actuators (SDCI)

FOREWORD

1) The International Electrotechnical Commission (IEC) is a worldwide organization for standardization comprising all national electrotechnical committees (IEC National Committees). The object of IEC is to promote international co-operation on all questions concerning standardization in the electrical and electronic fields. To this end and in addition to other activities, IEC publishes International Standards, Technical Specifications, Technical Reports, Publicly Available Specifications (PAS) and Guides (hereafter referred to as "IEC Publication(s)"). Their preparation is entrusted to technical committees; any IEC National Committee interested in the subject dealt with may participate in this preparatory work. International, governmental and non-governmental organizations liaising with the IEC also participate in this preparation. IEC collaborates closely with the International Organization for Standardization (ISO) in accordance with conditions determined by agreement between the two organizations.
2) The formal decisions or agreements of IEC on technical matters express, as nearly as possible, an international consensus of opinion on the relevant subjects since each technical committee has representation from all interested IEC National Committees.
3) IEC Publications have the form of recommendations for international use and are accepted by IEC National Committees in that sense. While all reasonable efforts are made to ensure that the technical content of IEC Publications is accurate, IEC cannot be held responsible for the way in which they are used or for any misinterpretation by any end user.
4) In order to promote international uniformity, IEC National Committees undertake to apply IEC Publications transparently to the maximum extent possible in their national and regional publications. Any divergence between any IEC Publication and the corresponding national or regional publication shall be clearly indicated in the latter.
5) IEC itself does not provide any attestation of conformity. Independent certification bodies provide conformity assessment services and, in some areas, access to IEC marks of conformity. IEC is not responsible for any services carried out by independent certification bodies.
6) All users should ensure that they have the latest edition of this publication.
7) No liability shall attach to IEC or its directors, employees, servants or agents including individual experts and members of its technical committees and IEC National Committees for any personal injury, property damage or other damage of any nature whatsoever, whether direct or indirect, or for costs (including legal fees) and expenses arising out of the publication, use of, or reliance upon, this IEC Publication or any other IEC Publications.
8) Attention is drawn to the Normative references cited in this publication. Use of the referenced publications is indispensable for the correct application of this publication.
9) Attention is drawn to the possibility that some of the elements of this IEC Publication may be the subject of patent rights. IEC shall not be held responsible for identifying any or all such patent rights.

IEC 61131-9 has been prepared by subcommittee 65B: Measurement and control devices, of IEC technical committee 65: Industrial-process measurement, control and automation. It is an International Standard.

This second edition cancels and replaces the first edition published in 2013. This edition constitutes a technical revision.

This edition includes the following significant technical changes with respect to the previous edition:

a) requirements for Port Class B have been refined;
b) best practice patterns for Data Storage (backup of Device parameters) and Device reset functions have been introduced;
c) a new Standardized Master Interface (SMI) for PLC, IT, and an engineering tool access have been added.

Documents
Document Sharing Hub

Full document details: BS EN IEC 61131-9:2022

The text of this International Standard is based on the following documents:

Draft	Report on voting
65B/1218/FDIS	65B/1219/RVD

Full information on the voting for its approval can be found in the report on voting indicated in the above table.

The language used for the development of this International Standard is English.

This document was drafted in accordance with ISO/IEC Directives, Part 2, and developed in accordance with ISO/IEC Directives, Part 1 and ISO/IEC Directives, IEC Supplement, available at www.iec.ch/members_experts/refdocs. The main document types developed by IEC are described in greater detail at www.iec.ch/standardsdev/publications.

A list of all parts in the IEC 61131 series, published under the general title *Programmable controllers*, can be found on the IEC website.

The committee has decided that the contents of this document will remain unchanged until the stability date indicated on the IEC website under webstore.iec.ch in the data related to the specific document. At this date, the document will be

- reconfirmed,
- withdrawn,
- replaced by a revised edition, or
- amended.

IMPORTANT – The "colour inside" logo on the cover page of this document indicates that it contains colours which are considered to be useful for the correct understanding of its contents. Users should therefore print this document using a colour printer.

Documents
Document Sharing Hub

Full document details: BS EN IEC 61131-9:2022

INTRODUCTION

0.1 General

IEC 61131-9 is part of a series of standards on programmable controllers and the associated peripherals and should be read in conjunction with the other parts of the series.

Where a conflict exists between this and other IEC standards (except basic safety standards), the provisions of this document should be considered to govern in the area of programmable controllers and their associated peripherals.

The increased use of micro-controllers embedded in low-cost sensors and actuators has provided opportunities for adding diagnosis and configuration data to support increasing application requirements.

The driving force for the SDCI (IO-Link™[1]) technology is the need of these low-cost sensors and actuators to exchange this diagnosis and configuration data with a controller (PC or PLC) using a low-cost, digital communication technology while maintaining backward compatibility with the current DI/DO signals.

In fieldbus concepts, the SDCI technology defines a generic interface for connecting sensors and actuators to a Master unit, which can be combined with gateway capabilities to become a fieldbus remote I/O node.

Any SDCI compliant Device can be attached to any available interface Port of the Master. SDCI compliant Devices perform physical to digital conversion in the Device, and then communicate the result directly in a standard format using "coded switching" of the 24 V I/O signalling line, thus removing the need for different DI, DO, AI, AO modules and a variety of cables.

Physical topology is point-to-point from each Device to the Master using three wires over distances up to 20 m. The SDCI physical interface is backward compatible with the usual 24 V I/O signalling specified in IEC 61131-2. Transmission rates of 4,8 kbit/s, 38,4 kbit/s and 230,4 kbit/s are supported.

The Master of the SDCI interface detects, identifies, and manages Devices plugged into its Ports.

Tools allow the association of Devices with their corresponding electronic I/O Device Descriptions (IODD) and their subsequent configuration to match the application requirements.

The SDCI technology specifies three different levels of diagnostic capabilities: for immediate response by automated needs during the production phase, for medium term response by operator intervention, or for longer term commissioning and maintenance via extended diagnosis information.

The structure of this document is described in 4.8.

Conformity with IEC 61131-9 cannot be claimed unless the requirements of Annex H are met.

[1] IO-Link™ is a trade name of the "IO-Link Community". This information is given for the convenience of users of this document and does not constitute an endorsement by IEC of the trade name holder or any of its products. Compliance with this document does not require use of the registered logos for IO-Link™. Use of the registered logos for IO-Link™ requires permission of the "IO-Link Community".

AVA Documents
Document Sharing Hub

Terms of general use are defined in IEC 61131-1 or in the IEC 60050 series [1][2]. More specific terms are defined in this document.

0.2 Patent declaration

The International Electrotechnical Commission (IEC) draws attention to the fact that it is claimed that compliance with this document may involve the use of a patent. IEC takes no position concerning the evidence, validity, and scope of this patent right.

The holder of this patent right has assured IEC that s/he is willing to negotiate licences under reasonable and non-discriminatory terms and conditions with applicants throughout the world. In this respect, the statement of the holder of this patent right is registered with IEC. Information may be obtained from the patent database available at http://patents.iec.ch.

Attention is drawn to the possibility that some of the elements of this document may be the subject of patent rights other than those in the patent database. IEC shall not be held responsible for identifying any or all such patent rights.

[2] Numbers in square brackets refer to the Bibliography.

Documents
Document Sharing Hub

Full document details: BS EN IEC 61131-9:2022

PROGRAMMABLE CONTROLLERS –

Part 9: Single-drop digital communication interface for small sensors and actuators (SDCI)

1 Scope

This part of IEC 61131 specifies a single-drop digital communication interface technology for small sensors and actuators SDCI (commonly known as IO-Link™[3]), which extends the traditional digital input and digital output interfaces as defined in IEC 61131-2 towards a point-to-point communication link for the exchange of complex data in both directions. This technology also enables the transfer of parameters to Devices and the delivery of identification and diagnostic information from the Devices to the automation system.

This technology is mainly intended for use with simple sensors and actuators in factory automation, which include small and cost-effective microcontrollers.

This document specifies the SDCI communication services and protocol (physical layer, data link layer and application layer in accordance with the ISO/OSI reference model) for both SDCI Masters and Devices.

This document also includes EMC test requirements.

This document does not cover communication interfaces or systems incorporating multiple point or multiple drop linkages, or integration of SDCI into higher level systems such as fieldbuses.

2 Normative references

The following documents are referred to in the text in such a way that some or all of their content constitutes requirements of this document. For dated references, only the edition cited applies. For undated references, the latest edition of the referenced document (including any amendments) applies.

IEC 60664 (all parts), *Insulation coordination for equipment within low-voltage supply systems*

IEC 60947-5-2, *Low-voltage switchgear and controlgear – Part 5-2: Control circuit devices and switching elements – Proximity switches*

IEC 61000-4-2, *Electromagnetic compatibility (EMC) – Part 4-2: Testing and measurement techniques – Electrostatic discharge immunity test*

IEC 61000-4-3, *Electromagnetic compatibility (EMC) – Part 4-3 : Testing and measurement techniques – Radiated, radio-frequency, electromagnetic field immunity test*

IEC 61000-4-4, *Electromagnetic compatibility (EMC) – Part 4-4: Testing and measurement techniques – Electrical fast transient/burst immunity test*

---

[3] IO-Link™ is a trade name of the "IO-Link Community". This information is given for the convenience of users of this document and does not constitute an endorsement by IEC of the trade name holder or any of its products. Compliance with this document does not require use of the registered logos for IO-Link™. Use of the registered logos for IO-Link™ requires permission of the "IO-Link Community".

AVA Documents
Document Sharing Hub

IEC 61000-4-5, *Electromagnetic compatibility (EMC) – Part 4-5: Testing and measurement techniques – Surge immunity test*

IEC 61000-4-6, *Electromagnetic compatibility (EMC) – Part 4-6: Testing and measurement techniques – Immunity to conducted disturbances, induced by radio-frequency fields*

IEC 61000-4-11, *Electromagnetic compatibility (EMC) – Part 4-11: Testing and measurement techniques – Voltage dips, short interruptions and voltage variations immunity tests for equipment with input current up to 16 A per phase*

IEC 61000-6-2, *Electromagnetic compatibility (EMC) – Part 6-2: Generic standards – Immunity standard for industrial environments*

IEC 61000-6-4, *Electromagnetic compatibility (EMC) – Part 6-4: Generic standards – Emission standard for industrial environments*

IEC 61076-2-101, *Connectors for electronic equipment – Product requirements – Part 2-101: Circular connectors – Detail specification for M12 connectors with screw-locking*

IEC 61010-2-201, *Safety requirements for electrical equipment for measurement, control, and laboratory use – Part 2-201: Particular requirements for control equipment*

IEC 61131-1, *Programmable controllers – Part 1: General information*

IEC 61131-2, *Industrial-process measurement and control – Programmable controllers – Part 2: Equipment requirements and tests*

3 Terms, definitions, symbols, abbreviated terms, and conventions

3.1 Terms and definitions

For the purposes of this document, the terms and definitions given in IEC 61131-1 and IEC 61131-2 and the following apply.

ISO and IEC maintain terminological databases for use in standardization at the following addresses:

- IEC Electropedia: available at http://www.electropedia.org/
- ISO Online browsing platform: available at http://www.iso.org/obp

3.1.1
address
part of the M-sequence control to reference data within data categories of a communication channel

3.1.2
application layer
AL
<SDCI> part of the protocol responsible for the transmission of Process Data objects and On-request Data objects

3.1.3
Block Parameter
consistent parameter access via multiple Indices or Subindices

Documents
Document Sharing Hub

Full document details: BS EN IEC 61131-9:2022

3.1.4
checksum
<SDCI> complementary part of the overall data integrity measures in the data link layer in addition to the UART parity bit

3.1.5
CHKPDU
integrity protection data within an ISDU communication channel generated through XOR processing the octets of a request or response

3.1.6
coded switching
SDCI communication, based on the standard binary signal levels of IEC 61131-2

3.1.7
COM1
SDCI communication mode with transmission rate of 4,8 kbit/s

3.1.8
COM2
SDCI communication mode with transmission rate of 38,4 kbit/s

3.1.9
COM3
SDCI communication mode with transmission rate of 230,4 kbit/s

3.1.10
COMx
one out of three possible SDCI communication modes COM1, COM2, or COM3

3.1.11
communication channel
logical connection between Master and Device

Note 1 to entry: Four communication channels are defined: process channel, page and ISDU channel (for parameters), and diagnosis channel.

3.1.12
communication error
unexpected disturbance of the SDCI transmission protocol

3.1.13
cycle time
time to transmit an M-sequence between a Master and its Device including the following idle time

3.1.14
Device
single passive peer to a Master such as a sensor or actuator

Note 1 to entry: Uppercase "Device" is used for SDCI equipment, while lowercase "device" is used in a generic manner.

3.1.15
Direct Parameter
directly (page) addressed parameter transferred acyclically via the page communication channel without acknowledgment

Documents
Document Sharing Hub

Full document details: BS EN IEC 61131-9:2022

3.1.16
dynamic parameter
part of a Device's parameter set defined by on-board user interfaces such as teach-in buttons or control panels in addition to the static parameters

3.1.17
Event
instance of a change of conditions in a Device

Note 1 to entry: Uppercase "Event" is used for SDCI Events, while lowercase "event" is used in a generic manner.

Note 2 to entry: An Event is indicated via the Event flag within the Device's status cyclic information, then acyclic transfer of Event data (typically diagnosis information) is conveyed through the diagnosis communication channel.

3.1.18
fallback
transition of a Port from coded switching to switching signal mode

3.1.19
inspection level
degree of verification for the Device identity

3.1.20
interleave
segmented cyclic data exchange for Process Data with more than 2 octets through subsequent cycles

3.1.21
Indexed Service Data Unit
ISDU
data unit used for acyclic acknowledged transmission of parameters that can be segmented in a number of M-sequences

3.1.22
legacy Device
Device designed in accordance with [8]

3.1.23
legacy Master
Master designed in accordance with [8]

3.1.24
M-sequence
sequence of two messages comprising a Master message and its subsequent Device message

3.1.25
M-sequence control
first octet in a Master message indicating the read/write operation, the type of the communication channel, and the address, for example offset or flow control

3.1.26
M-sequence error
unexpected or wrong message content, or no response

3.1.27
M-sequence type
one particular M-sequence format out of a set of specified M-sequence formats

Documents
Document Sharing Hub

Full document details: BS EN IEC 61131-9:2022

3.1.28
Master
active peer connected through Ports to one up to n Devices and which provides an interface to the gateway to the upper-level communication systems or PLCs

Note 1 to entry: Uppercase "Master" is used for SDCI equipment, while lowercase "master" is used in a generic manner.

3.1.29
message
<SDCI> sequence of UART frames transferred either from a Master to its Device or vice versa following the rules of the SDCI protocol

3.1.30
On-request Data
OD
acyclically transmitted data upon request of the Master application consisting of parameters or Event data

3.1.31
physical layer
first layer of the ISO-OSI reference model, which provides the mechanical, electrical, functional and procedural means to activate, maintain, and de-activate physical connections for bit transmission between data-link entities

Note 1 to entry: The physical layer also provides means for wake-up and fallback procedures.

[SOURCE: ISO/IEC 7498-1:1994 [5], 7.7.2, modified – Text extracted from 7.7.2, Note 1 to entry added]

3.1.32
Port
communication medium interface of the Master to one Device

3.1.33
Process Data
PD
input or output values from or to a discrete or continuous automation process cyclically transferred with high priority and in a configured schedule automatically between Master and Device

3.1.34
Process Data cycle
complete transfer of all Process Data from or to an individual Device that can comprise several cycles in case of segmentation (interleave)

3.1.35
single parameter
independent parameter access via one single Index or Subindex

3.1.36
SIO
Port operation mode in accordance with digital input and output defined in IEC 61131-2 that is established after power-up or fallback or unsuccessful communication attempts

3.1.37
static parameter
part of a Device's parameter set to be saved in a Master for the case of replacement without engineering tools

Documents
Document Sharing Hub
Full document details: BS EN IEC 61131-9:2022

3.1.38
switching signal
binary signal from or to a Device when in SIO mode (as opposed to the "coded switching" SDCI communication)

3.1.39
System Management
SM
<SDCI> means to control and coordinate the internal communication layers and the exceptions within the Master and its Ports, and within each Device

3.1.40
UART frame
<SDCI> bit sequence starting with a start bit, followed by eight bits carrying a data octet, followed by an even parity bit and ending with one stop bit

3.1.41
wake-up
procedure for causing a Device to change its mode from SIO to SDCI

3.1.42
wake-up request
WURQ
physical layer service used by the Master to initiate wake-up of a Device, and put it in a receive ready state

3.2 Symbols and abbreviated terms

Δf_{DTRM}	permissible deviation from data transfer rate (measured in %)
ΔVS	power supply ripple (measured in V)
AL	application layer
BEP	bit error probability
C/Q	connection for communication (C) or switching (Q) signal (SIO)
CL_{eff}	effective total cable capacity (measured in nF)
CQ	input capacity at C/Q connection (measured in nF)
DI	digital input
DL	data link layer
DO	digital output
f_{DTR}	data transfer rate (measured in bit/s)
H/L	high/low signal at receiver output
I/O	input/output
ILL	input load current at input C/Q to $V0$ (measured in A)
IODD	IO Device Description (see 10.9)
$IP24_{\mathrm{M}}$	extra DC supply current for Devices
IQ	driver current in saturated operating status ON (measured in A)
IQH	driver current on high-side driver in saturated operating status ON (measured in A)
IQL	driver current on low-side driver in saturated operating status ON (measured in A)
$IQPK$	maximum driver current in unsaturated operating status ON (measured in A)

AVA Documents
Document Sharing Hub
Full document details: BS EN IEC 61131-9:2022

$IQPKH$	maximum driver current on high-side driver in unsaturated operating status ON (measured in A)
$IQPKL$	maximum driver current on low-side driver in unsaturated operating status ON (measured in A)
IQQ	quiescent current at input C/Q to $V0$ with inactive output drivers (measured in A)
IQ_{WU}	amplitude of Master's wake-up request current (measured in A)
IS	supply current at V+ (measured in A)
$ISIR$	current pulse supply capability at V+ (measured in A)
LED	light emitting diode
L−	power supply (−)
L+	power supply (+)
N24	24 V extra power supply (−)
NRZ	non-return to zero
n_{WU}	wake-up retry count
On/Off	driver's ON/OFF switching signal
OD	On-request Data
OVD	signal overload detect
P24	24 V extra power supply (+)
PD	Process Data
PDCT	Port and Device configuration tool
PL	physical layer
PLC	programmable logic controller
PS	power supply (measured in V)
QIS_D	power-up charge consumption
r	time to reach a stable level with reference to the beginning of the start bit (measured in T_{BIT})
RL_{eff}	loop resistance of cable (measured in Ω)
s	time to exit a stable level with reference to the beginning of the start bit (measured in T_{BIT})
SDCI	single-drop digital communication interface
SIO	standard input output (digital switching mode) [IEC 61131-2]
SM	system management
SMI	standardized Master interface
t_1	UART frame transfer delay on Master (measured in T_{BIT})
t_2	UART frame transfer delay on Device (measured in T_{BIT})
t_A	response delay on Device (measured in T_{BIT})
T_{BIT}	bit time (measured in s)
t_{CYC}	cycle time on M-sequence level (measured in s)
t_{DF}	fall time (measured in s)
T_{DMT}	delay time while establishing Master Port communication (measured in T_{BIT})
T_{DR}	rise time (measured in s)

Documents
Document Sharing Hub
Full document details: BS EN IEC 61131-9:2022

T_{DSIO}	delay time on Device for transition to SIO mode following wake-up request (measured in s)
T_{DWU}	wake-up retry delay (measured in s)
$t_{M\text{-}sequence}$	M-sequence duration (measured in T_{BIT})
t_{idle}	idle time between two M-sequences (measured in s)
t_H	detection time for high level (measured in s)
t_L	detection time for low level (measured in s)
t_{ND}	noise suppression time (measured in s)
T_{RDL}	wake-up readiness following power ON (measured in s)
T_{REN}	receive enable (measured in s)
T_{SD}	device detect time (measured in s)
T_{WU}	pulse duration of wake-up request (measured in s)
UART	universal asynchronous receiver transmitter
UML	Unified Modelling Language [ISO/IEC 19505 series]
$V+$	voltage at L+
$V0$	voltage at L−
$VD+_L$	voltage drop on the line between the L+ connections on Master and Device (measured in V)
$VD0_L$	voltage drop on the line between the L− connections on Master and Device (measured in V)
VDQ_L	voltage drop on the line between the C/Q connections on Master and Device (measured in V)
$VHYS$	hysteresis of receiver threshold voltage (measured in V)
VI	input voltage at connection C/Q with reference to $V0$ (measured in V)
VIH	input voltage range at connection C/Q for high signal (measured in V)
VIL	input voltage range at connection C/Q for low signal (measured in V)
$VP24_M$	extra DC supply voltage for Devices
VRQ	residual voltage on driver in saturated operating status ON (measured in V)
$VRQH$	residual voltage on high-side driver in operating status ON (measured in V)
$VRQL$	residual voltage on low-side driver in saturated operating status ON (measured in V)
VTH	threshold voltage of receiver with reference to $V0$ (measured in V)
$VTHH$	threshold voltage of receiver for safe detection of a high signal (measured in V)
$VTHL$	threshold voltage of receiver for safe detection of a low signal (measured in V)
WURQ	wake-up request pulse

3.3 Conventions

3.3.1 General

The service model, service primitives, and the diagrams shown in this document are entirely abstract descriptions. The implementation of the services may reflect individual issues and may be different.

Documents
Document Sharing Hub

Full document details: BS EN IEC 61131-9:2022

3.3.2 Service parameters

Service primitives are used to represent service provider/consumer interactions (ISO/IEC 10731 [18]). They convey parameters which indicate the information available in the provider/consumer interaction. In any particular interface, not each and every parameter needs to be explicitly stated.

The service specification in this document uses a tabular format to describe the component parameters of the service primitives. The parameters which apply to each group of service primitives are set out in tables. Each table consists of up to five columns:

1) parameter name,
2) request primitive (.req),
3) indication primitive (.ind),
4) response primitive (.rsp), and
5) confirmation primitive (.cnf).

One parameter (or component of it) is listed in each row of each table. Under the appropriate service primitive columns, a code is used to specify the type of usage of the parameter on the primitive specified in the column.

M Parameter is mandatory for the primitive.

U Parameter is a user option and can or cannot be provided depending on dynamic usage of the service user. When not provided a default value for the parameter is assumed.

C Parameter is conditional upon other parameters or upon the environment of the service user.

– Parameter is never present.

S Parameter is a selected item.

Some entries are further qualified by items in brackets. These can be:

a) a parameter-specific constraint "(=)" indicates that the parameter is semantically equivalent to the parameter in the service primitive to its immediate left in the table,
b) an indication that some note applies to the entry "(n)" indicates that the following note "n" contains additional information related to the parameter and its use.

3.3.3 Service procedures

The procedures are defined in terms of:

– the interactions between application entities through the exchange of protocol data units, and
– the interactions between a communication layer service provider and a communication layer service consumer in the same system through the invocation of service primitives.

These procedures are applicable to instances of communication between systems which support time-constrained communications services within the communication layers.

3.3.4 Service attributes

The nature of the different (Master and Device) services is characterized by attributes. All services are defined from the view of the affected layer towards the layer above.

I Initiator of a service (towards the layer above)

R Receiver (responder) of a service (from the layer above)

Documents
Document Sharing Hub

Full document details: BS EN IEC 61131-9:2022

3.3.5 Figures

For figures that show the structure and services of protocol layers, the following conventions are used:

– an arrow with just a service name represents both a request and the corresponding confirmation, with the request being in the direction of the arrow,

– a request without confirmation, as well as all indications and responses are labelled as such (i.e. service.req, service.ind, service.rsp).

Figure 1 shows the example of a confirmed service.

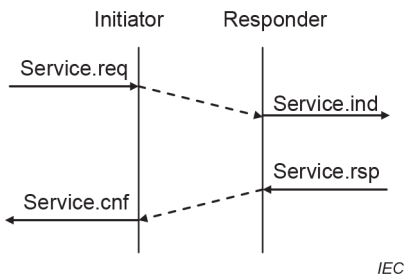

Figure 1 – Example of a confirmed service

3.3.6 Tables

Some tables in this document show highlighted areas (gray) to increase the information content (structure) and to indicate reserved or special content.

3.3.7 Transmission octet order

Figure 2 shows how word based data types are transferred from memory to transmission medium and vice versa (i.e. most significant octet transmitted first, see 7.3.3.2 and 7.3.6.1).

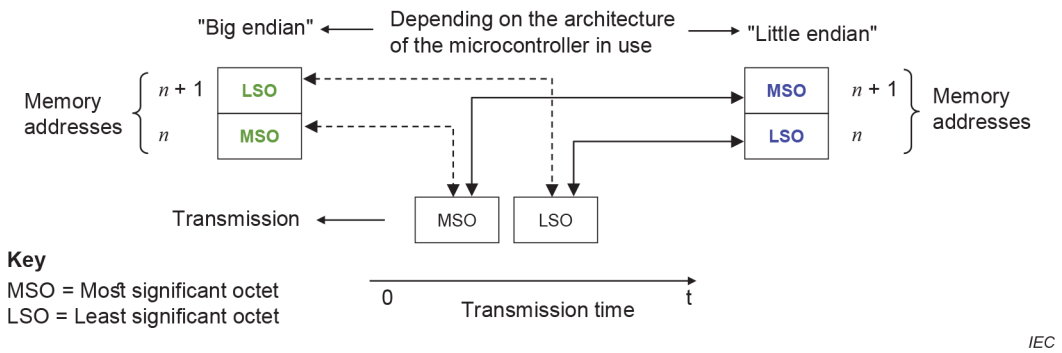

Figure 2 – Memory storage and transmission order for WORD based data types

3.3.8 Behavioral descriptions

For the behavioral descriptions, the notations of UML 2 (ISO/IEC 19505 series [19]) are used (e.g. state, sequence, activity, timing diagrams, guard conditions).

State diagrams are the primary source for implementations whereas sequence charts illustrate certain use cases. Characteristics of state diagrams are

– triggers or events coming from external requests ("calls") or internal changes such as timeouts,

– [guard(s)] as Boolean expressions for exits of states,

Documents
Document Sharing Hub
Full document details: BS EN IEC 61131-9:2022

– numbered transitions describing actions in addition to the triggers within separate state-transition tables.

The layout of these tables follows IEC TR 62390 [14].

In this document, the concept of "nested states" with superstates and substates is used as shown in the example of Figure 3.

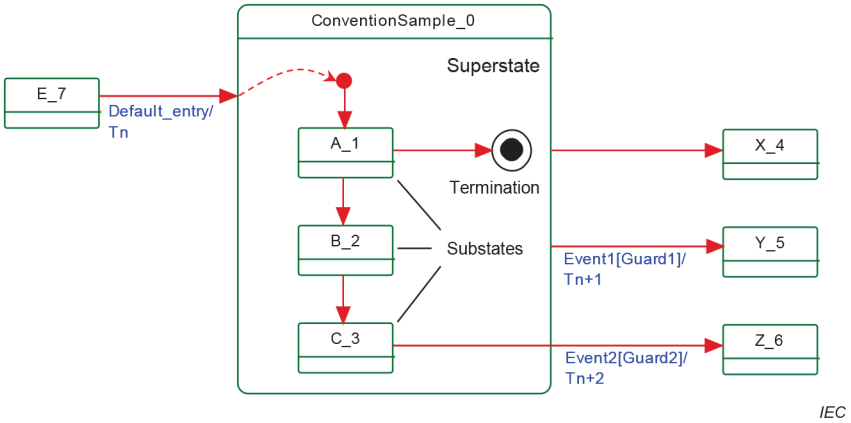

Figure 3 – Example of a nested state

UML 2 allows hierarchies of states with superstates and substates. The highest superstate represents the entire state machine.

This concept allows for simplified modelling since the content of superstates can be moved to a separate drawing. An eyeglasses icon usually represents this content.

Compared to "flat" state machines, a particular set of rules shall be observed for "nested states":

a) A transition to the edge of a superstate (e.g. Default_entry) implies transition to the initial substate (e.g. A_1).

b) Transition to a termination state inside a superstate implies a transition without event and guard to a state outside (e.g.X_4). The superstate will become inactive.

c) A transition from any of the substates (e.g. A_1, B_2, or C_3) to a state outside (Y_5) can take place whenever Event1 occurs and Guard1 is true. This is helpful in case of common errors within the substates. The superstate will become inactive.

d) A transition from a particular substate (e.g. C_3) to a state outside (Z_6) can take place whenever Event2 occurs and Guard2 is true. The superstate will become inactive.

Owing to UML design tool restrictions the following exceptions apply.

For state diagrams, a service parameter (in capital letters) is attached to the service name via an underscore character, such as for example in DL_SetMode_INACTIVE.

For sequence diagrams, the service primitive is attached via an underscore character instead of a dot, and the service parameter is added in parenthesis, such as for example in DL_Event_ind (OPERATE).

Timing constraints are labelled "tm(time in ms)".

Asynchronously received service calls are not modelled in detail within state diagrams.

Documents
Document Sharing Hub
Full document details: BS EN IEC 61131-9:2022

4 Overview of SDCI (IO-Link™)

4.1 Purpose of technology

Figure 4 shows the basic concept of SDCI.

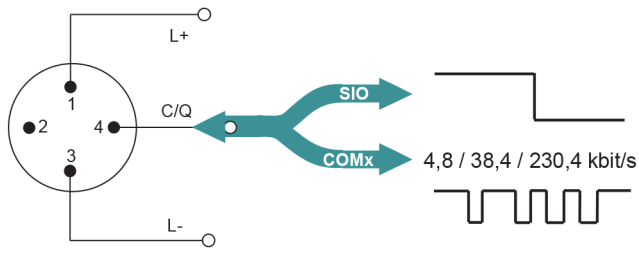

Pin	Signal	Definition	Standard
1	L+	24 V	IEC 61131-2
2	I/Q	Not connected, DI, or DO	IEC 61131-2
3	L-	0 V	IEC 61131-2
4	Q	"Switching signal" (SIO)	IEC 61131-2
	C	"Coded switching" (COM1, COM2, COM3)	IEC 61131-9

IEC

Figure 4 – SDCI compatibility with IEC 61131-2

The single-drop digital communication interface technology for small sensors and actuators SDCI (commonly known as IO-Link™) defines a migration path from the existing digital input and digital output interfaces for switching 24 V Devices as defined in IEC 61131-2 towards a point-to-point communication link. Thus, for example, digital I/O modules in existing fieldbus peripherals can be replaced by SDCI Master modules providing both classic DI/DO interfaces and SDCI. Analog transmission technology can be replaced by SDCI combining its robustness, parameterization, and diagnostic features with the saving of digital/analog and analog/digital conversion efforts.

4.2 Positioning within the automation hierarchy

Figure 5 shows the domain of the SDCI technology within the automation hierarchy.

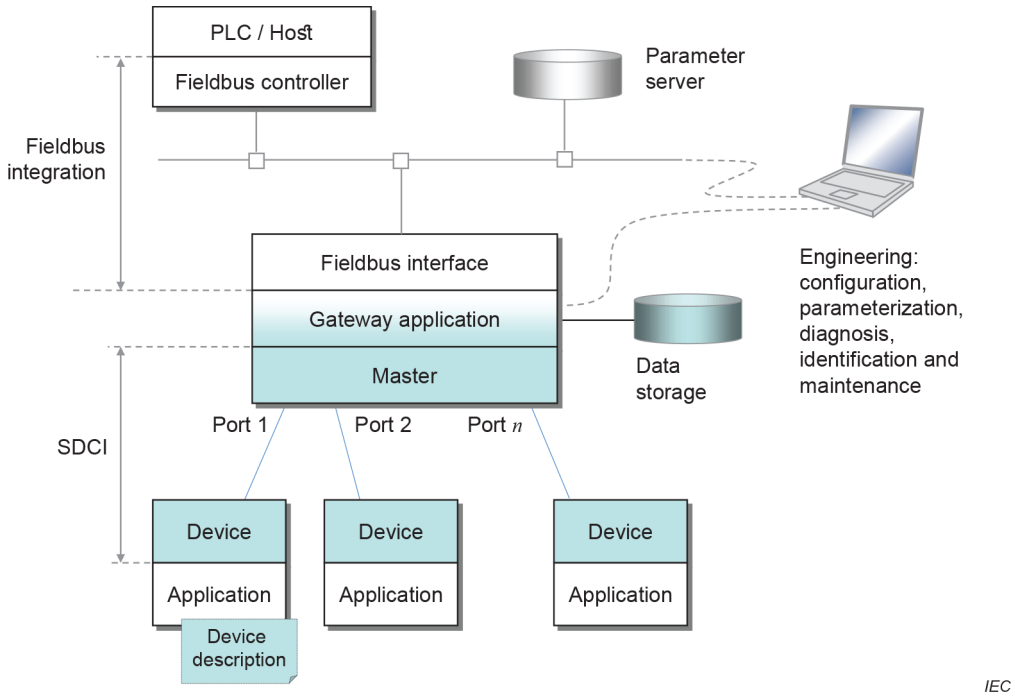

Figure 5 – Domain of the SDCI technology within the automation hierarchy

Documents
Document Sharing Hub
Full document details: BS EN IEC 61131-9:2022

The SDCI technology defines a generic interface for connecting sensors and actuators to a Master unit, which can be combined with gateway capabilities to become a fieldbus remote I/O node.

Starting point for the design of SDCI is the classic 24 V digital input (DI) defined in IEC 61131-2 and output interface (DO) specified in Table 6. Thus, SDCI offers connectivity of classic 24 V sensors ("switching signals") as a default operational mode. Additional connectivity is provided for actuators when a Port has been configured into "single-drop communication mode".

Many sensors and actuators nowadays are already equipped with microcontrollers offering a UART interface that can be extended by addition of a few hardware components and protocol software to support SDCI communication. This second operational mode uses "coded switching" of the 24 V I/O signalling line. Once activated, the SDCI mode supports parameterization, cyclic data exchange, diagnosis reporting, identification and maintenance information, and external parameter storage for Device backup and fast reload of replacement devices. Sensors and actuators with SDCI capability are referred to as "Devices" in this document. To improve start-up performance these Devices usually provide non-volatile storage for parameters.

NOTE Configuration and parameterization of Devices is supported through an XML-based device description (see [6]), which is not part of this document.

4.3 Wiring, connectors and power

The default connection (Port Class A) comprises four pins (see Figure 4). The default wiring for Port Class A complies with IEC 60947-5-2 and uses only three wires for 24 V, 0 V, and a signal line. The fourth wire may be used as an additional signal line complying with IEC 61131-2.

Five pins connections (Port Class B) are specified for Devices requiring additional power from an independant 24 V power supply.

NOTE A Port Class A Device using the fourth wire is not compatible with a Port Class B Master.

Maximum length of cables is 20 m, shielding is not required.

4.4 Communication features of SDCI

The generic Device model is shown in Figure 6 and explained in this subclause.

Documents
Document Sharing Hub

Full document details: BS EN IEC 61131-9:2022

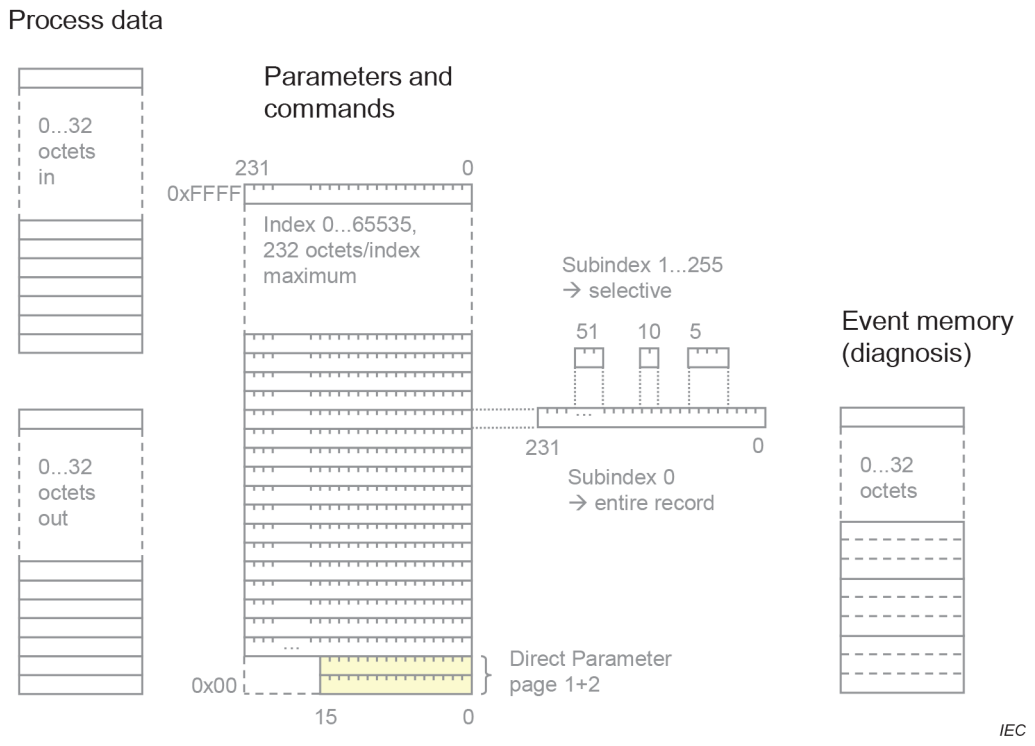

Figure 6 – Generic Device model for SDCI (Master's view)

A Device can receive Process Data (out) to control a discrete or continuous automation process or send Process Data (in) representing its current state or measurement values. The Device usually provides parameters enabling the user to configure its functions to satisfy particular needs. To support this case a large parameter space is defined with access via an Index (0 to 65 535; with a predefined organization) and a Subindex (0 to 255).

The first two index entries 0 and 1 are reserved for the Direct Parameter pages 1 and 2 with a maximum of 16 octets each. Parameter page 1 is mainly dedicated to Master commands such as Device startup and fallback, retrieval of Device specific operational and identification information. Parameter page 2 allows for a maximum of 16 octets of Device specific parameters.

The other Indices (2 to 65 535) each allow access to one record having a maximum size of 232 octets. Subindex 0 specifies transmission of the complete record addressed by the Index; other subindices specify transfer of selected data items within the record.

Within a record, individual data items can start on any bit offset, and their length can range from 1 bit to 232 octets, but the total number of data items in the record cannot exceed 255. The organization of data items within a record is specified in the IO Device Description (IODD).

All changes of Device condition that require reporting or intervention are stored within an Event memory before transmission. An Event flag is then set in the cyclic data exchange to indicate the existence of an Event.

Communication between a Master and a Device is point-to-point and is based on the principle of a Master first sending a request message and then a Device sending a response message (see Figure 38). Both messages together are called an M-sequence. Several M-sequence types are defined to support user requirements for data transmission (see Figure 39).

Data of various categories are transmitted through separate communication channels within the data link layer, as shown in Figure 7.

Documents
Document Sharing Hub
Full document details: BS EN IEC 61131-9:2022

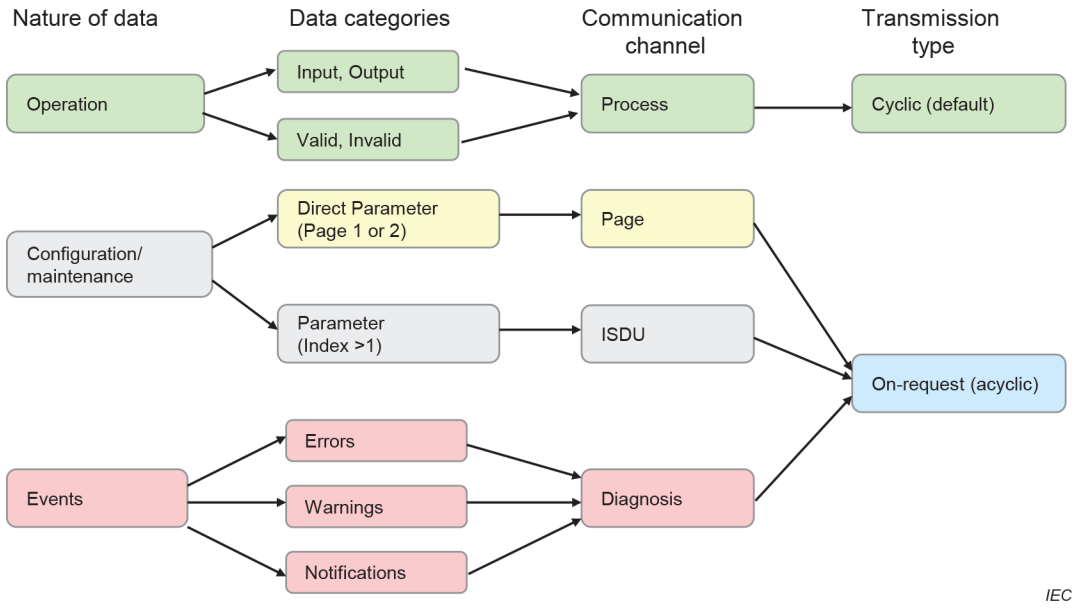

Figure 7 – Relationship between nature of data and transmission types

– Operational data such as Device inputs and outputs is transmitted through a process channel using cyclic transfer. Operational data can also be associated with qualifiers such as valid/invalid.
– Configuration and maintenance parameters are transmitted using acyclic transfers. A page channel is provided for direct access to parameter pages 1 and 2, and an ISDU channel is used for accessing additional parameters and commands.
– Device Events are transmitted using acyclic transfers through a diagnosis channel. Device Events are reported using three severity levels, error, warning, and notification.

The first octet of a Master message controls the data transfer direction (read/write) and the type of communication channel.

Figure 8 shows each Port of a Master has its own data link layer which interfaces to a common master application layer. Within the application layer, the services of the data link layer are translated into actions on Process Data objects (input/output), On-request Data objects (read/write), and events. Master applications include a Configuration Manager (CM), Data Storage (DS) mechanism, Diagnosis Unit (DU), On-request Data Exchange (ODE), and a Process Data Exchange (PDE).

System Management checks identification of the connected Devices and adjusts Ports and Devices to match the chosen configuration and the properties of the connected Devices. It controls the state machines in the application (AL) and data link layers (DL), for example at start-up.

Documents
Document Sharing Hub
Full document details: BS EN IEC 61131-9:2022

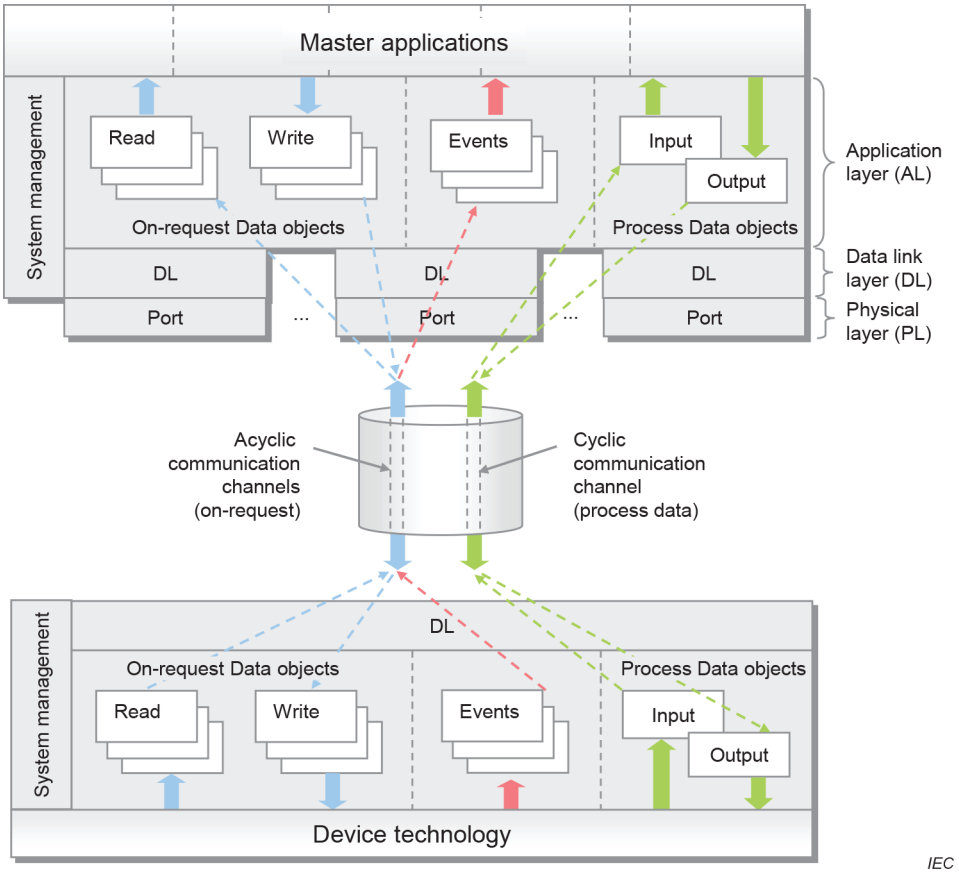

Figure 8 – Object transfer at the application layer level (AL)

4.5 Role of a Master

A Master accommodates 1 to n Ports and their associated data link layers. During start-up it changes the Ports to the user-selected Port modes, which can be DEACTIVATED, IOL_MANUAL, IOL_AUTOSTART, DI_C/Q, or DO_C/Q. If communication is requested, the Master uses a special wake-up current pulse to initiate communication with the Device. The Master then auto-adjusts the transmission rate to COM1, COM2, or COM3 (see Table 9) and checks the "personality" of the connected Device, i.e. its VendorID, DeviceID, and communication properties.

If there is a mismatch between the Device parameters and the stored parameter set within the Master, the parameters in the Device are overwritten (see 11.4) or the stored parameters within the Master are updated depending on the configuration.

The Master is responsible for the assembling and disassembling of all data from or to the Devices (see Clause 11).

The Master provides a Data Storage area of at least 2 048 octets per Device for backup of Device data (see 11.4). The Master may combine this Device data together with all other relevant data for its own operation and make this data available for higher level applications for Master backup purpose or recipe control (see 13.4.2).

Documents
Document Sharing Hub
Full document details: BS EN IEC 61131-9:2022

4.6 SDCI configuration

Engineering support for a Master is usually provided by a Port and Device Configuration Tool (PDCT). The PDCT configures both Port properties and Device properties (see parameters shown in Figure 6). It combines both an interpreter of the I/O Device Description (IODD) and a configurator (see Clause 13). The IODD provides all the necessary properties to establish communication and the necessary parameters and their boundaries to establish the desired function of a sensor or actuator. The PDCT also supports the compilation of the Process Data for propagation on the fieldbus and vice versa.

4.7 Mapping to fieldbuses and/or other upper-level systems

Specifications for integration of Masters into upper-level systems such as a fieldbus system, i.e. the definition of gateway functions for exchanging data with upper-level entities, is out of the scope of this document. However, it is mandatory for all functions of this document to be made available to the users by a particular integration according to the capability level of the upper-level system technology except for those functions that are declared explicitly as optional.

EXAMPLE These functions include mapping of the Process Data exchange, realization of program-controlled parameterization or a remote parameter server, or the propagation of diagnosis information.

The integration of a PDCT into engineering tools of a particular fieldbus or other upper-level system is out of the scope of this document.

4.8 Standard structure

Figure 9 shows the logical structure of the Master and Device. Clause 5 specifies the Physical Layer (PL) of SDCI, Clause 6 specifies details of the SIO mode. Clause 7 specifies Data Link Layer (DL) services, protocol, wake-up, M-sequences, and the DL layer handlers. Clause 8 specifies the services and the protocol of the Application Layer (AL) and Clause 9 the System Management (SM) responsibilities.

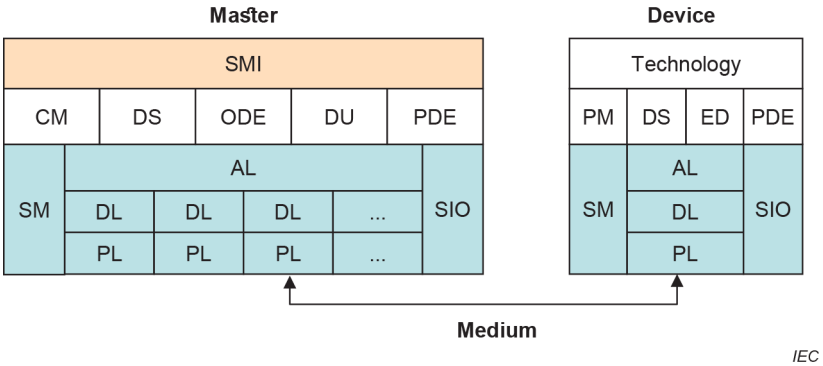

Figure 9 – Logical structure of Master and Device

Clause 10 specifies Device applications and features. These include Process Data Exchange (PDE), Parameter Management (PM), Data Storage (DS), and Event Dispatcher (ED). Technology specific Device applications are not part of this document. They may be specified in profiles for particular Device families.

Clause 11 specifies Master applications and features. These include Process Data Exchange (PDE), On-request Data Exchange (ODE), Configuration Management (CM), Data Storage (DS) and Diagnosis Unit (DU). A Standardized Master Interface (SMI) ensures uniform behavior via specified services and allows for usage of one PDCT (Master tool) for different Master brands.

Clause 12 provides a holistic best practice view on Data Storage behavior of both Master and Device.

AVA Documents
Document Sharing Hub
Full document details: BS EN IEC 61131-9:2022

Clause 13 outlines integration aspects of SDCI into various automation and IT realms.

Several normative and informative annexes are included. Annex A defines the available M-sequence types. Annex B describes the parameters of the Direct Parameter page and the fixed Device parameters. Annex C lists the error types in case of acyclic transmissions and Annex D the EventCodes (diagnosis information of Devices). Annex E specifies the coding of argument blocks for the SMI services. Annex F specifies the available basic and composite data types. Annex G defines the structure of Data Storage objects. Annex H deals with conformity and electromagnetic compatibility test requirements and Annex I provides graphs of residual error probabilities, demonstrating the level of SDCI's data integrity. The informative Annex J provides an example of the sequence of acyclic data transmissions. The informative Annex K explains two recommended methods for detecting parameter changes in the context of Data Storage.

5 Physical Layer (PL)

5.1 General

5.1.1 Basics

The 3-wire connection system of SDCI is based on the specifications in IEC 60947-5-2. The three lines are used as follows: (L+) for the 24 V power supply, (L−) for the ground line, and (C/Q) for the switching signal (Q) or SDCI communication (C), as shown in Figure 10.

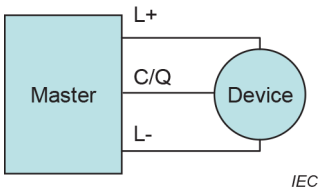

Figure 10 – Three wire connection system

NOTE 1 Binary sensors compliant with IEC 60947-5-2 are compatible with the SDCI 3-wire connection system (including from a power consumption point of view).

Support of the SDCI 3-wire connection system is mandatory for the Master. Ports with this characteristic are called Port Class A.

Port Class A uses a four-pin connector. The fourth wire may be used as an additional signal line complying with IEC 61131-2. Its support is optional in both Masters and Devices.

Five wire connections (Port Class B) are specified for Devices requiring additional power from an independant 24 V power supply (see 5.5.1).

NOTE 2 A Port Class A Device using the fourth wire is not compatible with a Port Class B Master.

5.1.2 Topology

The SDCI system topology uses point-to-point links between a Master and its Devices as shown in Figure 11. The Master can have multiple Ports for the connection of Devices. Only one Device shall be connected to each Port.

Documents
Document Sharing Hub
Full document details: BS EN IEC 61131-9:2022

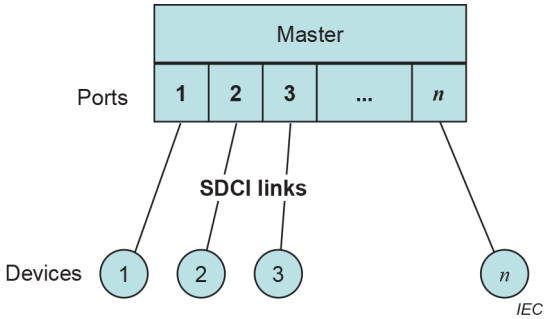

Figure 11 – Topology of SDCI

5.2 Physical layer services

5.2.1 Overview

Figure 12 shows an overview of the Master's physical layer and its service primitives.

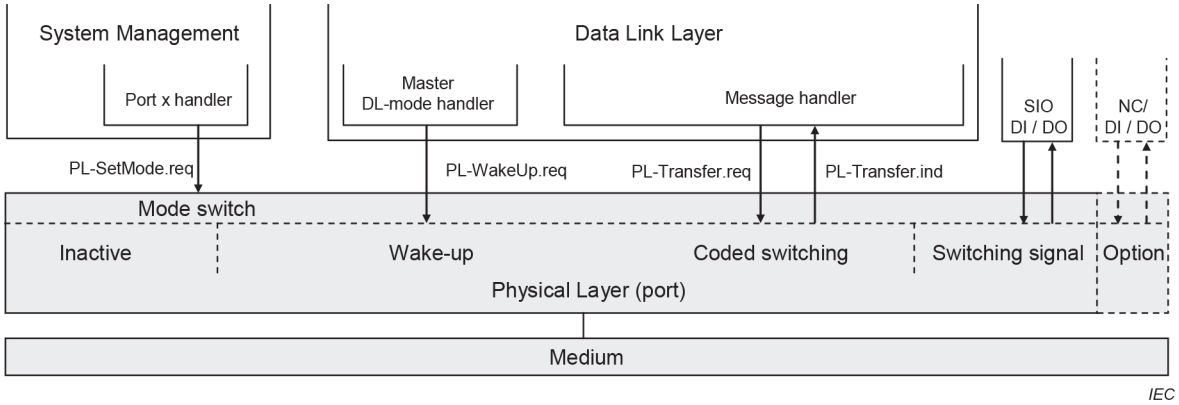

Figure 12 – Physical layer (Master)

The physical layer specifies the operation of the C/Q line in Figure 4 and the associated line driver (transmitter) and receiver of a particular Port. The Master operates this line in three main modes (see Figure 12): inactive, "Switching signal" (DI/DO), or "Coded switching" (COMx). The service PL-SetMode.req is responsible for switching into one of these modes.

If the Port is in inactive mode, the C/Q line shall be high impedance (floating). In SIO mode, the Port can be used as a standard input or output interface according to the definitions of IEC 61131-2 or in Table 6 respectively. The communication layers of SDCI are bypassed as shown in Figure 12; the signals are directly processed within the Master application. In SDCI mode, the service PL_WakeUp.req creates a special signal pattern (current pulse) that can be detected by an SDCI enabled Device connected to this Port (see 5.3.3.3).

Figure 13 shows an overview of the Device's physical layer and its service primitives.

The physical layer of a Device according to Figure 13 follows the same principle, except that there is no inactive state. By default, at power on or cable reconnection, the Device shall operate in the SIO mode, as a digital input (from a Master's point of view). The Device shall always be able to detect a wake-up current pulse (wake-up request) except during a permanent inactive state. The service PL_WakeUp.ind reports successful detection of the wake-up request (usually a microcontroller interrupt), which is required for the Device to switch to the SDCI mode.

A special MasterCommand (fallback) sent via SDCI causes the Device to switch back to SIO mode.

AVA Documents
Document Sharing Hub

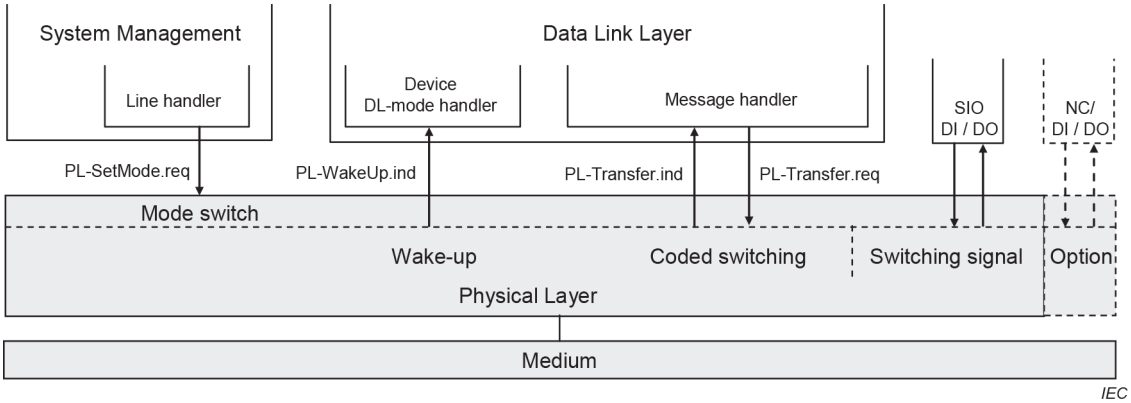

Figure 13 – Physical layer (Device)

Subsequently, those services are specified that are provided by the PL to System Management and to the Data Link Layer (see Figure 85 and Figure 96 for a complete overview of all the services). Table 1 lists the assignments of Master and Device to their roles as initiator or receiver for the individual PL services.

Table 1 – Service assignments of Master and Device

Service name	Master	Device
PL-SetMode	R	R
PL-WakeUp	R	I
PL-Transfer	I / R	R / I
Key (see 3.3.4) I Initiator of service R Receiver (Responder) of service		

5.2.2 PL services

5.2.2.1 PL_SetMode

The PL-SetMode service is used to set up the electrical characteristics and configurations of the Physical Layer. The parameters of the service primitives are listed in Table 2.

Table 2 – PL_SetMode

Parameter name	.req
Argument TargetMode	M M

Argument

The service-specific parameters of the service request are transmitted in the argument.

Documents
Document Sharing Hub
Full document details: BS EN IEC 61131-9:2022

TargetMode

This parameter indicates the requested operation mode

Permitted values:
INACTIVE (C/Q line in high impedance),
DI (C/Q line in digital input mode),
DO (C/Q line in digital output mode),
COM1 (C/Q line in COM1 mode),
COM2 (C/Q line in COM2 mode),
COM3 (C/Q line in COM3 mode).

5.2.2.2 PL_WakeUp

The PL-WakeUp service initiates or indicates a specific sequence which prepares the Physical Layer to send and receive communication requests (see 5.3.3.3). This unconfirmed service has no parameters. Its success can only be verified by a Master by attempting to communicate with the Device. The service primitives are listed in Table 3.

Table 3 – PL_WakeUp

Parameter name	.req	.ind
<none>		

5.2.2.3 PL_Transfer

The PL-Transfer service is used to exchange the SDCI data between Data Link Layer and Physical Layer. The parameters of the service primitives are listed in Table 4.

Table 4 – PL_Transfer

Parameter name	.req	ind.
Argument		
Data	M	M
Result (+)		S
Result (−)		S
Status		M

Argument

The service-specific parameters of the service request are transmitted in the argument.

Data

This parameter contains the data value which is transferred over the SDCI interface.

Permitted values: 0…255.

Result (+):

This selection parameter indicates that the service request has been executed successfully.

Result (−):

This selection parameter indicates that the service request failed.

Status

This parameter contains supplementary information on the transfer status.

Documents
Document Sharing Hub

Full document details: BS EN IEC 61131-9:2022

Permitted values:
PARITY_ERROR (UART detected a parity error),
FRAMING_ERROR (invalid UART stop bit detected),
OVERRUN (octet collision within the UART).

5.3 Transmitter/Receiver

5.3.1 Description method

The physical layer is specified by means of electrical and timing requirements. Electrical requirements specify signal levels and currents separately for Master and Device in the form of reference schematics. Timing requirements specify the signal transmission process (specifically the receiver) and a special signal detection function.

5.3.2 Electrical requirements

5.3.2.1 General

The line driver is specified by a reference schematic diagram corresponding to Figure 14. On the Master side, a transmitter comprises a combination of two line drivers and one current sink. On the Device side, in its simplest form, the transmitter takes the form of a p-switching driver. As an option there can be an additional n-switching or non-switching driver (this also allows the option of push-pull output operation).

In operating status ON the descriptive variables are the residual voltage VRQ, the standard driver current IQ, and the peak current $IQPK$. The source is controlled by the On/Off signal. An overload current event is indicated at the “Overload” output (OVD). This feature can be used for the current pulse detection (wake-up).

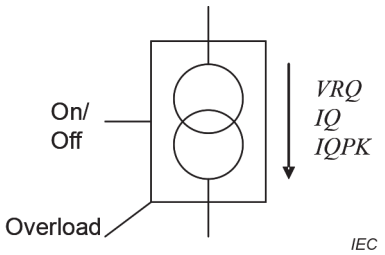

Figure 14 – Line driver reference schematics

The receiver is specified by a reference schematic diagram according to Figure 15. It performs the function of a comparator and is specified by its switching thresholds VTH and a hysteresis $VHYS$ between the switching thresholds. The output indicates the logic level (High or Low) at the receiver input.

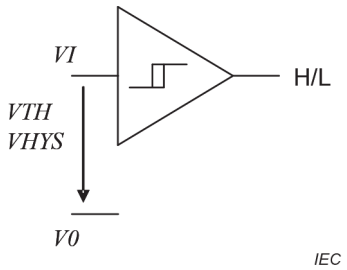

Figure 15 – Receiver reference schematics

Figure 16 shows the reference schematics for the interconnection of Master and Device for the SDCI 3-wire connection system.

AVA Documents
Document Sharing Hub
Full document details: BS EN IEC 61131-9:2022