BS EN IEC 61375-2-8:2021

BSI Standards Publication

Electronic railway equipment — Train communication network (TCN)

Part 2-8: TCN conformance test

Documents
Document Sharing Hub

Full document details: BS EN IEC 61375-2-8:2021

National foreword

This British Standard is the UK implementation of EN IEC 61375-2-8:2021. It is identical to IEC 61375-2-8:2021.

The UK participation in its preparation was entrusted to Technical Committee GEL/9/-/4, Railway applications - Train communication network and multimedia systems.

A list of organizations represented on this committee can be obtained on request to its committee manager.

Contractual and legal considerations

This publication has been prepared in good faith, however no representation, warranty, assurance or undertaking (express or implied) is or will be made, and no responsibility or liability is or will be accepted by BSI in relation to the adequacy, accuracy, completeness or reasonableness of this publication. All and any such responsibility and liability is expressly disclaimed to the full extent permitted by the law.

This publication is provided as is, and is to be used at the recipient's own risk.

The recipient is advised to consider seeking professional guidance with respect to its use of this publication.

This publication is not intended to constitute a contract. Users are responsible for its correct application.

© The British Standards Institution 2022
Published by BSI Standards Limited 2022

ISBN 978 0 580 97713 8

ICS 45.060.01

Compliance with a British Standard cannot confer immunity from legal obligations.

This British Standard was published under the authority of the Standards Policy and Strategy Committee on 28 February 2022.

Amendments/corrigenda issued since publication

Date	Text affected

Documents
Document Sharing Hub

Full document details: BS EN IEC 61375-2-8:2021

EUROPEAN STANDARD

NORME EUROPÉENNE

EUROPÄISCHE NORM

EN IEC 61375-2-8

December 2021

ICS 45.060.01

English Version

Electronic railway equipment - Train communication network (TCN) - Part 2-8: TCN conformance test (IEC 61375-2-8:2021)

Matériel électronique ferroviaire - Réseau embarqué de train (TCN) - Partie 2-8 : Essai de conformité TCN (IEC 61375-2-8:2021)

Elektronische Betriebsmittel für Bahnen - Zug-Kommunikations-Netzwerk (TCN) - Teil 2-8: TCN-Konformitätsprüfung (IEC 61375-2-8:2021)

This European Standard was approved by CENELEC on 2021-11-29. CENELEC members are bound to comply with the CEN/CENELEC Internal Regulations which stipulate the conditions for giving this European Standard the status of a national standard without any alteration.

Up-to-date lists and bibliographical references concerning such national standards may be obtained on application to the CEN-CENELEC Management Centre or to any CENELEC member.

This European Standard exists in three official versions (English, French, German). A version in any other language made by translation under the responsibility of a CENELEC member into its own language and notified to the CEN-CENELEC Management Centre has the same status as the official versions.

CENELEC members are the national electrotechnical committees of Austria, Belgium, Bulgaria, Croatia, Cyprus, the Czech Republic, Denmark, Estonia, Finland, France, Germany, Greece, Hungary, Iceland, Ireland, Italy, Latvia, Lithuania, Luxembourg, Malta, the Netherlands, Norway, Poland, Portugal, Republic of North Macedonia, Romania, Serbia, Slovakia, Slovenia, Spain, Sweden, Switzerland, Turkey and the United Kingdom.

European Committee for Electrotechnical Standardization
Comité Européen de Normalisation Electrotechnique
Europäisches Komitee für Elektrotechnische Normung

CEN-CENELEC Management Centre: Rue de la Science 23, B-1040 Brussels

© 2021 CENELEC All rights of exploitation in any form and by any means reserved worldwide for CENELEC Members.

Ref. No. EN IEC 61375-2-8:2021 E

AVA Documents Document Sharing Hub

Full document details: BS EN IEC 61375-2-8:2021

European foreword

The text of document 9/2746/FDIS, future edition 1 of IEC 61375-2-8, prepared by IEC/TC 9 “Electrical equipment and systems for railways” was submitted to the IEC-CENELEC parallel vote and approved by CENELEC as EN IEC 61375-2-8:2021.

The following dates are fixed:

- latest date by which the document has to be implemented at national level by publication of an identical national standard or by endorsement (dop) 2022–08–29
- latest date by which the national standards conflicting with the document have to be withdrawn (dow) 2024–11–29

Attention is drawn to the possibility that some of the elements of this document may be the subject of patent rights. CENELEC shall not be held responsible for identifying any or all such patent rights.

Any feedback and questions on this document should be directed to the users’ national committee. A complete listing of these bodies can be found on the CENELEC website.

Endorsement notice

The text of the International Standard IEC 61375-2-8:2021 was approved by CENELEC as a European Standard without any modification.

Documents
Document Sharing Hub

Full document details: BS EN IEC 61375-2-8:2021

Annex ZA
(normative)

Normative references to international publications with their corresponding European publications

The following documents are referred to in the text in such a way that some or all of their content constitutes requirements of this document. For dated references, only the edition cited applies. For undated references, the latest edition of the referenced document (including any amendments) applies.

NOTE 1 Where an International Publication has been modified by common modifications, indicated by (mod), the relevant EN/HD applies.

NOTE 2 Up-to-date information on the latest versions of the European Standards listed in this annex is available here: www.cenelec.eu.

Publication	Year	Title	EN/HD	Year
IEC 60571	2012	Railway applications - Electronic equipment used on rolling stock	-	-
IEC 61000-4-4	2012	Electromagnetic compatibility (EMC) - Part 4–4: Testing and measurement techniques - Electrical fast transient/burst immunity test	EN 61000-4-4	2012
IEC 61076-2-101	2012	Connectors for electronic equipment - Product requirements - Part 2–101: Circular connectors - Detail specification for M12 connectors with screw-locking	EN 61076-2-101	2012
IEC 61076-3-104	-	Connectors for electrical and electronic equipment - Product requirements - Part 3–104: Detail specification for 8-way, shielded free and fixed connectors for data transmissions with frequencies up to 2 000 MHz	EN 61076-3-104	-
IEC 61156-6	-	Multicore and symmetrical pair/quad cables for digital communications - Part 6: Symmetrical pair/quad cables with transmission characteristics up to 1 000 MHz - Work area wiring - Sectional specification	-	-
IEC 61375-1	2012	Electronic railway equipment - Train communication network (TCN) - Part 1: General architecture	EN 61375-1	2012
IEC 61375-2-1	2012	Electronic railway equipment - Train communication network (TCN) - Part 2–1: Wire Train Bus (WTB)	EN 61375-2-1	2012
IEC 61375-2-3	2015	Electronic railway equipment - Train communication network (TCN) - Part 2–3: TCN communication profile	EN 61375-2-3	2015
-	-		+ A11	2017

Documents
Document Sharing Hub

Full document details: BS EN IEC 61375-2-8:2021

IEC 61375-2-5	2014	Electronic railway equipment - Train communication network (TCN) - Part 2–5: Ethernet train backbone	EN 61375-2-5	2015
IEC 61375-3-4	2014	Electronic railway equipment - Train communication network (TCN) - Part 3–4: Ethernet Consist Network (ECN)	EN 61375-3-4	2014
-	-		+ A11	2017
ISO/IEC 9646-1	1994	Information technology - Open Systems Interconnection - Conformance testing methodology and framework – Part 1: General concepts	-	-
ISO/IEC 9646-7	1995	Information technology - Open Systems Interconnection - Conformance testing methodology and framework – Part 7: Implementation conformance statements	-	-
ISO/IEC 11801	(series)	Information technology - Generic cabling for customer premises	-	-
IEEE 802.1AB	2009	Station and Media Access Control Connectivity Discovery	-	-
IEEE 802.1AX	2008	IEEE Standard for Local and metropolitan area networks - Link Aggregation	-	-
IEEE 802.1Qaz	2011	IEEE Standard for Local and metropolitan area networks - Enhanced Transmission Selection	-	-
IEEE 802.1D	1990	IEEE Standard for local and metropolitan area networks - Media Access Control (MAC) Bridges	-	-
IEEE 802.1Q	-	IEEE Standard for Local and metropolitan area networks – Virtual Bridged Local Area Networks	-	-
IEEE 802.2	-	Logical Link Control	-	-
IEEE 802.3	2012	Information technology - Telecommunications and information exchange between systems - Local and metropolitan area networks - Specific requirements - Part 3: Carrier sense multiple access with collision detection (CMSA/CD) access	-	-
IEEE 802.3az	-	Energy Efficient Ethernet	-	-
IETF RFC 768		User Datagram Protocol	-	-
IETF RFC 791		INTERNET PROTOCOL	-	-
IETF RFC 792		INTERNET CONTROL MESSAGE PROTOCOL		
IETF RFC 793		TRANSMISSION CONTROL PROTOCOL	-	-
IETF RFC 826		An Ethernet Address Resolution Protocol	-	-
IETF RFC 1034	-	DOMAIN NAMES – CONCEPTS AND FACILITIES	-	-
IETF RFC 1035	-	DOMAIN NAMES – IMPLEMENTATION AND SPECIFICATION	-	-

Documents
Document Sharing Hub

Full document details: BS EN IEC 61375-2-8:2021

IETF RFC 1213	-	Management Information Base for Network Management of TCP/IP-based Internets: MIB-II	-	-
IETF RFC 1305	-	Network Time Protocol (Version 3) - Specification, Implementation and Analysis	-	-
IETF RFC 1361	-	Simple Network Time Protocol (SNTP)	-	-
IETF RFC 1901	-	Introduction to Community-based SNMPv2	-	-
IETF RFC 1905	-	Protocol Operations for Version 2 of the Simple Network Management Protocol (SNMPv2)	-	-
IETF RFC 1906		Transport Mappings for Version 2 of the Simple Network Management Protocol (SNMPv2)	-	-
IETF RFC 1918		Address Allocation for Private Internets	-	-
IETF RFC 2131	-	Dynamic Host Configuration Protocol	-	-
IETF RFC 2236	-	Internet Group Management Protocol, Version 2	-	-
IETF RFC 2365	-	Administratively Scoped IP Multicast	-	-
IETF RFC 2474	-	Definition of the Differentiated Services Field (DS Field) in the IPv4 and IPv6 Headers	-	-
IETF RFC 2544	-	Benchmarking Methodology for Network Interconnect Devices	-	-
IETF RFC 3203	-	DHCP reconfigure extension	-	-
IETF RFC 3986	-	Uniform Resource Identifier (URI): Generic Syntax	-	-
IETF RFC 4122	-	A Universally Unique IDentifier (UUID) URN Namespace	-	-
TIA/EIA-568-B	-	Commercial Building Telecommunications Cabling Standard	-	-
ANSI X3.263	1995	Information Technology - Fibre Distributed Data Interface (FDDI) – Token Ring Twisted Pair Physical Layer Medium Dependent (TP-PMD)	-	-

Documents
Document Sharing Hub

Full document details: BS EN IEC 61375-2-8:2021

CONTENTS

FOREWORD 14
INTRODUCTION 16
1 Scope 17
2 Normative references 17
3 Terms, definitions, symbols and abbreviated terms 19
3.1 Terms and definitions 19
3.2 Symbols and abbreviated terms 19
4 Conformance test: approach, requirements and boundaries 20
4.1 Approach 20
4.1.1 General 20
4.1.2 Requirements 20
4.1.3 Requirements declaration statements for an Item Under Test (IUT) 22
4.2 Boundaries 23
4.2.1 General 23
4.2.2 Basic interconnection tests 24
4.2.3 Capability tests 24
4.2.4 Behaviour tests 25
4.2.5 Conformance resolution tests 25
4.2.6 Interpretation of clauses/subclauses and statements 26
4.2.7 Relation to interoperability 27
4.2.8 Relation to performance test 28
4.2.9 Definition of test cases 28
4.3 Conformance assessment process outline 29
4.3.1 General 29
4.3.2 Analysis of results, outcomes and verdicts 29
4.4 Mapping of IUT types to conformance test suites 30
5 Basic interface test 31
5.1 Scope 31
5.2 PICS pro-forma 31
5.2.1 General 31
5.2.2 PICS Tables 31
5.3 Testing framework 33
5.4 Physical layer test 33
5.4.1 Test purpose 33
5.4.2 Inspection of the Hardware Ethernet interface 33
5.4.3 Inspection of the mechanical Ethernet interface construction 33
5.4.4 Check of electrical Ethernet interface design 34
5.4.5 Check of Ethernet interface characteristics 34
5.4.6 Ethernet signal wave form test (IEEE standard) 34
5.4.7 Ethernet signal wave form test (amplified signals, optional) 34
5.4.8 Auto-Crossover- and Auto-Sensing-Test (only for switches) 34
5.5 Basic communication protocol test 35
5.5.1 Test purpose 35
5.5.2 Simple communication test 35
5.5.3 UDP rising payload test (only for End Devices) 35
5.5.4 TCP rising payload test (only for End Devices) 35

AVA Documents
Document Sharing Hub

5.5.5 UDP long term test (only for End Devices) ... 35
5.6 Communication reliability tests ... 35
5.6.1 Test purpose ... 35
5.6.2 Burst immunity test ... 35
5.6.3 Ethernet interface isolation test ... 36
6 Conformance test of End Device ... 36
6.1 General ... 36
6.2 Related requirements ... 37
6.3 IUT and Test scope ... 37
6.4 PICS Pro-forma ... 38
6.4.1 General ... 38
6.4.2 PICS Tables ... 38
6.5 Testing framework ... 44
6.6 Test Suite IEC 61375-2-3 ... 46
6.6.1 Test case TCCT23ED_001 ... 46
6.6.2 Test case TCCT23ED_002 ... 47
6.6.3 Test case TCCT23ED_003 ... 49
6.6.4 Test case TCCT23ED_004 ... 50
6.6.5 Test case TCCT23ED_005 ... 51
6.6.6 Test case TCCT23ED_006 ... 52
6.6.7 Test case TCCT23ED_007 ... 53
6.6.8 Test case TCCT23ED_008 ... 54
6.6.9 Test case TCCT23ED_009 ... 55
6.7 Test Suite IEC 61375-2-5 ... 55
6.7.1 Test case TCCT25ED_001 ... 55
6.7.2 Test case TCCT25ED_002 ... 56
6.7.3 Test case TCCT25ED_003 ... 57
6.7.4 Test case TCCT25ED_004 ... 58
6.7.5 Test case TCCT25ED_005 ... 59
6.7.6 Test case TCCT25ED_006 ... 60
6.7.7 Test case TCCT25ED_007 ... 61
6.7.8 Test case TCCT25ED_008 ... 62
6.7.9 Test case TCCT25ED_009 ... 63
6.7.10 Test case TCCT25ED_010 ... 64
6.8 Test Suite IEC61375-3-4 ... 65
6.8.1 Test case TCCT34ED_001 ... 65
6.8.2 Test case TCCT34ED_002 ... 66
6.8.3 Test case TCCT34ED_003 ... 67
6.8.4 Test case TCCT34ED_004 ... 68
6.8.5 Test case TCCT34ED_005 ... 69
6.8.6 Test case TCCT34ED_006 ... 70
6.8.7 Test case TCCT34ED_007 ... 71
6.8.8 Test case TCCT34ED_008 ... 72
6.8.9 Test case TCCT34ED_009 ... 73
6.8.10 Test case TCCT34ED_010 ... 74
6.8.11 Test case TCCT34ED_011 ... 75
6.8.12 Test case TCCT34ED_012 ... 76
6.8.13 Test case TCCT34ED_013 ... 77
6.8.14 Test case TCCT34ED_014 ... 78

Documents
Document Sharing Hub
Full document details: BS EN IEC 61375-2-8:2021

6.8.15 Test case TCCT34ED_015 ... 79
6.8.16 Test case TCCT34ED_016 ... 80
6.8.17 Test case TCCT34ED_017 ... 81
6.8.18 Test case TCCT34ED_018 ... 82
6.8.19 Test case TCCT34ED_019 ... 83
6.8.20 Test case TCCT34ED_020 ... 84
6.8.21 Test case TCCT34ED_021 ... 85
6.8.22 Test caseTCCT34ED_022 ... 86
7 Conformance test of ECN-equipped consist ... 86
7.1 Scope ... 86
7.2 Related requirements ... 86
7.3 PICS Pro-forma ... 86
7.3.1 General ... 86
7.3.2 PICS tables ... 87
7.4 Test cases ... 93
7.4.1 General ... 93
7.4.2 Recovery in case of network failure ... 94
7.4.3 IP address assignment via DHCP ... 96
7.4.4 Name (TCN-URI address) resolution via DNS ... 97
7.4.5 Switch basic functions ... 98
7.4.6 Priority levels ... 99
7.4.7 Ingress rate limiting ... 99
7.4.8 Egress rate shaping ... 100
7.4.9 Untagged/tagged frames ... 100
7.4.10 Switching and routing performance (optional) ... 101
7.4.11 NTP support ... 102
7.4.12 Switch management ... 102
7.4.13 Network management via SNMP ... 103
7.4.14 ECSP Interface (optional) ... 104
7.4.15 TTDB manager interface (optional) ... 105
7.4.16 DNS TCN interface (optional) ... 105
7.4.17 ETBN control interface (optional) ... 106
8 Conformance test of ETBN ... 106
8.1 Test scope ... 106
8.1.1 General ... 106
8.1.2 References ... 106
8.2 PICS Pro-forma ... 107
8.2.1 General ... 107
8.2.2 PICS tables ... 107
8.3 Test cases ... 115
8.3.1 Testing framework ... 115
8.3.2 Common Consist Topologies ... 118
8.3.3 Test Suite: ETB port settings ... 121
8.3.4 Test Suite: ETB Line Status and Link Aggregation management ... 123
8.3.5 Test Suite: TTDP HELLO format and content ... 130
8.3.6 Test Suite: Unicast address assignment and unicast routing ... 134
8.3.7 Test Suite: IP Multicast forwarding ... 137
8.3.8 Test Suite: TOPOLOGY frame format and basic functionality ... 148
8.3.9 Test Suite: Physical topology management and calculation ... 152

AVA Documents
Document Sharing Hub
Full document details: BS EN IEC 61375-2-8:2021

8.3.10 Test Suite: Logical connectivity management and calculation 156
8.3.11 Test Suite: Failing/loss of node(s) 162
8.3.12 Test Suite: Late/recovered node(s) 166
9 Conformance test of TRDP 172
9.1 General 172
9.2 Related requirements 173
9.3 SUT and Test scope 173
9.4 PICS Pro-forma 173
9.4.1 General 173
9.4.2 PICS Tables 173
9.5 Message Data test 187
9.5.1 Testing framework 187
9.5.2 Communication Model Test 188
9.5.3 Communication Pattern and Addressing Test 192
9.5.4 MD-PDU Test 204
9.5.5 TRDP Layer Service Primitives Test 206
9.5.6 TRDP Layer Filtering Rules Test 209
9.5.7 Caller TRDP Layer Test 214
9.5.8 Replier TRDP Layer Test 234
9.5.9 TCP Connection Handling Test 249
9.5.10 Message Data Echo Server Test 257
9.6 Process Data test 258
9.6.1 General 258
9.6.2 Test setup 258
9.6.3 PD push pattern test cases 259
9.6.4 PD pull pattern test cases 280
10 SDTv2 Conformance Test 298
10.1 Scope 298
10.1.1 General 298
10.1.2 Related requirements 298
10.1.3 Terms and abbreviations 298
10.1.4 Test scope 298
10.2 PICS Pro-forma 299
10.2.1 General 299
10.2.2 PICS Tables 299
10.3 SDSRC- SAFE DATA SOURCE 302
10.3.1 Purpose 302
10.3.2 Inspection of the SID Structure 302
10.3.3 Inspection of the Vital Data Packet 303
10.3.4 Exclusivity 304
10.3.5 SDSRC performance 305
10.4 SDSINK – SAFE DATA SINK 305
10.4.1 General 305
10.4.2 VDP sampling 305
10.4.3 VDP Integrity Check 305
10.4.4 Sink Time Supervision 306
10.4.5 Guard Time Supervision 306
10.4.6 Latency Monitoring 306
10.4.7 Channel Monitoring 307

AVA Documents
Document Sharing Hub
Full document details: BS EN IEC 61375-2-8:2021

10.4.8 SDTv2 Application Interface ... 307
10.4.9 Diagnostics and statistics ... 308
11 Conformance test of ETB-equipped consist ... 308
11.1 Scope ... 308
11.2 Abstract consist tester architecture ... 309
11.3 Consist test stages ... 311
11.4 PICS Pro-forma ... 311
11.4.1 General ... 311
11.4.2 PICS Tables ... 311
11.5 Related requirements ... 314
11.6 Testing configurations ... 314
11.6.1 General ... 314
11.6.2 Testing configuration TC1 ... 315
11.6.3 Testing configuration TC2 ... 316
11.6.4 Testing configuration TC3 ... 316
11.7 Consist tester operation ... 317
11.7.1 General ... 317
11.7.2 ECS addressing ... 317
11.7.3 Test Stimuli ... 317
11.7.4 Expected result verification ... 320
11.7.5 Test execution timing considerations ... 321
11.8 Basic test ... 321
11.8.1 General ... 321
11.8.2 Test sequence for TTDB computation (middle consist, same orientation) ... 321
11.8.3 Test sequence for TTDB computation (middle consist, inverse orientation) ... 321
11.8.4 Test sequence for TTDB computation (end consist, no traction, same orientation) ... 322
11.8.5 Test sequence for TTDB computation (end consist, no traction, inverse orientation) ... 322
11.8.6 Test sequence for TTDB computation (end consist, traction, same orientation) ... 323
11.8.7 Test sequence for TTDB computation (end consist, traction, inverse orientation) ... 323
11.8.8 Test sequence for TTDB computation (train lengthening and shortening) ... 324
11.9 Leading test ... 325
11.9.1 General ... 325
11.9.2 Test sequence for Leading (TE1.1 leading, CuT middle) ... 326
11.9.3 Test sequence for Leading (TE2 leading, CuT middle) ... 326
11.9.4 Test sequence for Leading (TE1.1 leading, CuT end) ... 326
11.9.5 Test sequence for Leading (CuT leading direction 1) ... 327
11.9.6 Test sequence for Leading (CuT leading direction 2) ... 327
11.9.7 Test sequence for Leading (Leading double request) ... 328
11.9.8 Test sequence for Leading (Leading conflict) ... 329
11.10 Inhibit test ... 329
11.10.1 General ... 329
11.10.2 Test sequence for Inhibit (single) ... 329
11.10.3 Test sequence for Inhibit (multiple) ... 330
11.11 Confirmation/correction test ... 331
11.11.1 General ... 331

Documents
Document Sharing Hub
Full document details: BS EN IEC 61375-2-8:2021

11.11.2 Test sequence for confirmation ... 332
11.11.3 Test sequence for correction single middle vehicle ... 333
11.11.4 Test sequence for correction two middle vehicles ... 333
11.11.5 Test sequence for correcting three middle vehicles ... 334
11.11.6 Test sequence for correcting end vehicle ... 335
11.12 Sleep mode function (optional) ... 336
11.12.1 General ... 336
11.12.2 Test sequence for sleep mode ... 336
11.13 Performance test ... 337
11.13.1 General ... 337
11.13.2 Inauguration performance ... 337
11.13.3 ECSP performance ... 338
11.14 End-to-End Communication ... 339
11.15 Multiple ETB test (option) ... 339
11.15.1 General ... 339
11.15.2 Conformance test ... 340
Annex A (normative) Test laboratory role and client role ... 341
A.1 Test laboratory and client role ... 341
A.1.1 General ... 341
A.1.2 Overview ... 341
A.2 Preparation for testing ... 342
A.2.1 General ... 342
A.2.2 General administrative steps ... 342
A.2.3 Agreement on test methods and selection of test suites ... 342
A.2.4 Exchange of documentation for conformance assessment ... 343
A.3 Test operation ... 344
A.3.1 General ... 344
A.3.2 Static conformance review ... 344
A.3.3 Selection of test cases and test parameterisation ... 345
A.3.4 Test campaign ... 345
A.4 Production of test reports ... 346
A.4.1 General ... 346
A.4.2 IUT conformance test report ... 347
A.4.3 Protocol conformance test report ... 347
Annex B (informative) Instructions for filling the PICS pro-forma ... 349
B.1 General ... 349
B.2 Abbreviations ... 349
B.3 Reference column ... 349
B.4 Supported subclause column ... 350
B.5 Supported capability column ... 350
B.6 Requirement column ... 350
B.7 Implementation column ... 350
B.8 Parameter values columns ... 351
B.8.1 Allowed min. ... 351
B.8.2 Default value ... 351
B.8.3 Allowed max. ... 351
B.8.4 Implemented value ... 351
Annex C (informative) Test instrumentation and dedicated test bed ... 352
C.1 Test instrumentation ... 352

AVA Documents
Document Sharing Hub

C.1.1 Standard instrumentation – Test suites standard instrumentation 352
C.1.2 Test bed architecture 352
C.1.3 Consist tester specification 353
Bibliography 356

Figure 1 – Setup for burst immunity test 36
Figure 2 – End Device conformance testing process 37
Figure 3 – Consist topology and logical view of ECN 38
Figure 4 – Testing framework architecture 44
Figure 5 – General configuration for ECN-equipped consist test 94
Figure 6 – Example of configuration for the test of network redundancy 94
Figure 7 – Example of configuration of network redundancy with dual homing End Device interfaces 95
Figure 8 – Example of the configuration for the test of IP address assignment via DHCP 97
Figure 9 – Example of the configuration for the test of Name resolution via DNS 98
Figure 10 – Example of the configuration for the test of NTP support 102
Figure 11 – Example of the configuration for the test of Network management via SNMP 104
Figure 12 – TTS1 One ETBN connects with test system (monitoring) 116
Figure 13 – TTS2 single ETBN connects with test system (one side simulation) 116
Figure 14 – TTS3 Single ETBN connects with test system (both sides simulation) 117
Figure 15 – TTS4 Multiple ETBNs connect with test system (monitoring) 117
Figure 16 – TTS5 multiple ETBNs connect with test system (one side simulation) 118
Figure 17 – TTS6 Multiple ETBN connects with test system (both sides simulation) 118
Figure 18 – Consist topology with single ETBN and single CN 119
Figure 19 – Consist topology with multiple ETBNs, each connected to a separate CN 119
Figure 20 – Consist topology with a single ETBN connected to multiple CNs 119
Figure 21 – Consist topology with single CN with redundant ETBNs 120
Figure 22 – Consist topology with multiple CNs with redundant ETBNs 120
Figure 23 – Consist topology with multiple ETNs and CNs connected asymmetrically 120
Figure 24 – Setup to verify full duplex mode on ETB ports 122
Figure 25 – Example where IUT sends TOPOLOGY on line B (here X is B, Y is A) 124
Figure 26 – Simulating Logical line down for single line setup, by letting simulator stop sending HELLO on line X (line A) 125
Figure 27 – Simulating Logical line down for multiple line setup, by letting simulator stop sending HELLO on line X (here line B) 125
Figure 28 – Simulating one-way transmission error, by letting simulator send HELLO with recvXStatus FALSE (here recvBStatus FALSE) 126
Figure 29 – Testing correct handling of loss of HELLO transmitted by IUT, and loss of HELLO sent to IUT 127
Figure 30 – ETB line failover setup, the line where IUT initially forwards the data stream is referred to as ‘X’ (here line B) 128
Figure 31 – Topology for general multicast routing tests 138
Figure 32 – Topology for testing multicast with ETBN with multiple CNs 140
Figure 33 – Multicast test setup for consist with ECNs connected to different ETBNs 144

AVA Documents
Document Sharing Hub
Full document details: BS EN IEC 61375-2-8:2021

Figure 34 – Testing multicast with redundant ETBNs and single CN 142
Figure 35 – Multicast routing in consist with redundant ETBN and multiple CNs 144
Figure 36 – Testing multicast handling after reinauguation 145
Figure 37 – Test of multicast between local CNs on same ETBN when inaugurating 146
Figure 38 – Test of multicast between local CNs on different ETBNs when inaugurating 147
Figure 39 – Test ability to translate multicast destination address 147
Figure 40 – Testing transmission of connectivity vector 154
Figure 41 – Testing transmission of ETBN Vectors, number of ETBNs and ConnTableCrc32 155
Figure 42 – Testing loss of intermediate ETBNs/consists when inauguration is inhibited 162
Figure 43 – Test of losing intermediate ETBN in existence of "unknown intermediate" 163
Figure 44 – Test ability to handle loss of end node 164
Figure 45 – Test ability to handle loss of end node during lengthening 165
Figure 46 – Test ability to handle loss of end node when “late intermediate” is present 166
Figure 47 – Test environment 172
Figure 48 – System under Test 173
Figure 49 – TTS, IUT connected to the test system 259
Figure 50 – The switch in test topology 259
Figure 51 – TRDP telegram format 260
Figure 52 – Dataset of CONFTEST_PUSH_FORMAT 261
Figure 53 – Dataset of CONFTEST_UDP_PORT 262
Figure 54 – Dataset of CONFTEST_FCS 264
Figure 55 – Dataset of CONFTEST_FCS_REPLY 264
Figure 56 – Dataset of CONFTEST_PROTO_VERSION 266
Figure 57 – Dataset of CONFTEST_PROTO_VERSION_REPLY 266
Figure 58 – Dataset of CONFTEST_SIMU_TOPO 269
Figure 59 – Dataset of CONFTEST_IDU_TOPO 269
Figure 60 – Dataset of CONFTEST_DATA_LEN_1432 271
Figure 61 – Dataset of CONFTEST_DATA_LEN_0 271
Figure 62 – Dataset of CONFTEST_DATA_LEN_512 271
Figure 63 – Byte alignment test of 441 bytes length telegram data 273
Figure 64 – Byte alignment test of 442 bytes length telegram data 273
Figure 65 – Byte alignment test of 443 bytes length telegram data 273
Figure 66 – Dataset of CONFTEST_PUSH_FORMAT 275
Figure 67 – Dataset of CONFTEST_TIMEOUT_BEHAVIOR_ZERO 275
Figure 68 – Dataset of CONFTEST_TIMEOUT_BEHAVIOR_KEEP 276
Figure 69 – Dataset of CONFTEST_IP_FILTER 277
Figure 70 – Dataset of CONFTEST_IP_FILTER_REPLY 277
Figure 71 – DSCP(QOS) and TTL test telegram data 278
Figure 72 – Dataset of CONFTEST_REDUNDANT 279
Figure 73 – Dataset of CONFTEST_UNICAST 280
Figure 74 – Dataset of CONFTEST_PULL_ FORMAT_REQUEST 282
Figure 75 – Dataset of CONFTEST_PULL_ FORMAT_REPLY 283

AVA Documents
Document Sharing Hub

Figure 76 – Dataset of CONFTEST_FCS_REQUEST 284
Figure 77 – Dataset of CONFTEST_FCS_REPLY 284
Figure 78 – Dataset of CONFTEST_PROTO_VERSION_REQUEST 286
Figure 79 – Dataset of CONFTEST_PROTO_VERSION_REPLY 286
Figure 80 – Dataset of CONFTEST_SIMU_TOPO 288
Figure 81 – Dataset of CONFTEST_IUT_TOPO 289
Figure 82 – Dataset of CONFTEST_IP_FILTER 290
Figure 83 – Dataset of CONFTEST_IP_FILTER_REPLY 290
Figure 84 – Dataset of CONFTEST_TIMEOUT_REQUEST_ZERO 292
Figure 85 – Dataset of CONFTEST_TIMEOUT_REPLY_ZERO 293
Figure 86 – Dataset of CONFTEST_TIMEOUT_REQUEST_KEEP 293
Figure 87 – Dataset of CONFTEST_TIMEOUT_REPLY_KEEP 294
Figure 88 – Dataset of CONFTEST_PULL_UNICAST 295
Figure 89 – Dataset of CONFTEST_REPLY COMID_REQUEST 296
Figure 90 – Dataset of CONFTEST_REPLY_COMID_REPLY 296
Figure 91 – Dataset of CONFTEST_REPLY_IPADDRESS_REQUEST 297
Figure 92 – Dataset of CONFTEST_REPLY_IPADDRESS_REPLY 297
Figure 93 – SDTv2 conformance testing process 298
Figure 94 – SID Generation 302
Figure 95 – Structure of a VDP 303
Figure 96 – VDP with detailed trailer structure 304
Figure 97 – Consist tester architecture 309
Figure 98 – ECSP proxy 310
Figure 99 – Testing configuration variants 315
Figure 100 – Testing configuration TC1 316
Figure 101 – Testing configuration TC2 316
Figure 102 – Testing configuration TC3 316
Figure 103 – TRDP ECSP control telegram 318
Figure C.1 – Coach tester architecture 353
Figure C.2 – Complete consist tester architecture 354
Figure C.3 – Multiple ETB tester architecture 355

Table 1 – Relation to interoperability 28
Table 2 – Relation to performance test 28
Table 3 – Test case categories 29
Table 4 – Mapping conformance testing suites to IUT types 31
Table 5 – Testing framework DEVICE description 45
Table 6 – Test case TCCT23ED_001 46
Table 7 – Test case TCCT23ED_002 47
Table 8 – Test case TCCT23ED_003 49
Table 9 – Test case TCCT23ED_004 50
Table 10 – Test case TCCT23ED_005 51
Table 11 – Test case TCCT23ED_006 52

AVA Documents
Document Sharing Hub

Full document details: BS EN IEC 61375-2-8:2021

Table 12 – Test case TCCT23ED_007 53
Table 13 – Test case TCCT23ED_008 54
Table 14 – Test case TCCT23ED_009 55
Table 15 – Test case TCCT25ED_001 55
Table 16 – Test case TCCT25ED_002 56
Table 17 – Test case TCCT25ED_003 57
Table 18 – Test case TCCT25ED_004 58
Table 19 – Test case TCCT25ED_005 59
Table 20 – Test case TCCT25ED_006 60
Table 21 – Test case TCCT25ED_007 61
Table 22 – Test case TCCT25ED_008 62
Table 23 – Test case TCCT25ED_009 63
Table 24 – Test case TCCT25ED_010 64
Table 25 – Test case TCCT34ED_001 65
Table 26 – Test case TCCT34ED_002 66
Table 27 – Test case TCCT34ED_003 67
Table 28 – Test case TCCT34ED_004 68
Table 29 – Test case TCCT34ED_005 69
Table 30 – Test case TCCT34ED_006 70
Table 31 – Test case TCCT34ED_007 71
Table 32 – Test case TCCT34ED_008 72
Table 33 – Test case TCCT34ED_009 73
Table 34 – Test case TCCT34ED_010 74
Table 35 – Test case TCCT34ED_011 75
Table 36 – Test case TCCT34ED_012 76
Table 37 – Test case TCCT34ED_013 77
Table 38 – Test case TCCT34ED_014 78
Table 39 – Test case TCCT34ED_015 79
Table 40 – Test case TCCT34ED_016 80
Table 41 – Test case TCCT34ED_017 81
Table 42 – Test case TCCT34ED_018 82
Table 43 – Test case TCCT34ED_019 83
Table 44 – Test case TCCT34ED_020 84
Table 45 – Test case TCCT34ED_021 85
Table 46 – Test caseTCCT34ED_022 86
Table 47 – Push pattern telegram test 259
Table 48 – Push pattern telegram format content 260
Table 49 – Telegram parameter of push pattern test 261
Table 50 – Destination UDP port test 262
Table 51 – Destination UDP port test telegram parameter 262
Table 52 – FCS check test 263
Table 53 – FCS check test telegram parameter 263
Table 54 – FCS check test reply telegram parameter 263

AVA Documents
Document Sharing Hub

Full document details: BS EN IEC 61375-2-8:2021

Table 55 – Protocol version test 265
Table 56 – Protocol version test telegram parameter 265
Table 57 – Protocol version test reply telegram parameter 265
Table 58 – Topology counter test 267
Table 59 – Simulator sending telegram parameter 268
Table 60 – IUT sending telegram parameter 269
Table 61 – Data length test 270
Table 62 – Data length test of 1 432 bytes length telegram parameters 270
Table 63 – Data length test of 0 byte length telegram parameters 270
Table 64 – Data length test of 512 bytes length telegram parameters 270
Table 65 – Byte alignment test 272
Table 66 – Byte alignment test of 441 bytes length telegram parameters 272
Table 67 – Byte alignment test of 442 bytes length telegram parameters 272
Table 68 – Byte alignment test of 443 bytes length telegram parameters 272
Table 69 – Timeout and validity test 274
Table 70 – Timeout and validity test telegram parameters 274
Table 71 – Timeout and validity test reply telegram parameters(ZERO mode) 274
Table 72 – Timeout and validity test reply telegram parameters(KEEP mode) 275
Table 73 – Receiving port IP filtering test 276
Table 74 – Receiving port IP filtering test telegram parameters 276
Table 75 – Receiving port IP filtering test reply telegram parameters 277
Table 76 – DSCP(QOS) and TTL test 278
Table 77 – DSCP(QOS) and TTL test telegram parameters 278
Table 78 – Redundancy test 279
Table 79 – Redundancy test telegram parameter 279
Table 80 – point to point test of push pattern 280
Table 81 – point to point test telegram parameter 280
Table 82 – Pull pattern telegram test 281
Table 83 – Pull pattern request telegram format content 281
Table 84 – Pull pattern reply telegram format content 281
Table 85 – Request telegram parameter of pull pattern test 282
Table 86 – Reply telegram parameter of pull pattern test 282
Table 87 – FCS check test 283
Table 88 – FCS check test request parameter 283
Table 89 – FCS check test reply parameter 284
Table 90 – Protocol version test 285
Table 91 – Protocol version test request telegram parameter 285
Table 92 – Protocol version test reply telegram parameter 285
Table 93 – Topology counter test 287
Table 94 – Requester topology counter test telegram parameter 288
Table 95 – Receiving port IP filtering test 289
Table 96 – Receiving port IP filtering test telegram parameters 289
Table 97 – Receiving port IP filtering test reply telegram parameters 290
Table 98 – Timeout and validity test 291
Table 99 – Timeout and validity test request telegram parameters (ZERO mode) 291
Table 100 – Timeout and validity test reply telegram parameters (ZERO mode) 291

AVA Documents
Document Sharing Hub

Table 101 – Timeout and validity test request telegram parameters (KEEP mode) 292
Table 102 – Timeout and validity test reply telegram parameters (KEEP mode) 292
Table 103 – Point to point test of pull pattern 294
Table 104 – Point to point test telegram parameter 294
Table 105 – Reply ComId test of pull pattern 295
Table 106 – Reply ComId test telegram parameter 295
Table 107 – Reply IP Address test of pull pattern 296
Table 108 – Reply IP Address test telegram parameter 297
Table 109 – Configuration TC1: single coach coupled to an open train 316
Table 110 – Configuration TC2: single coach coupled to an open train 316
Table 111 – Configuration TC3: single coach coupled to an open train 317
Table 112 – ECSP control telegram for Leading request 319
Table 113 – ECSP control telegram for inauguration inhibit request 319
Table 114 – ECSP control telegram for sleep request 320
Table 115 – Test sequence for TTDB computation (middle consist, same oriTentation) 321
Table 116 – Test sequence for TTDB computation (middle consist, inverse orientation) 322
Table 117 – Test sequence for TTDB computation (end consist, no traction, same orientation) 322
Table 118 – Test sequence for TTDB computation (end consist, no traction, inverse orientation) 323
Table 119 – Test sequence for TTDB computation (end consist, traction, same orientation) 323
Table 120 – Test sequence for TTDB computation (end consist, traction, inverse orientation) 324
Table 121 – Test sequence for TTDB computation (train lengthening and shortening) 325
Table 122 – Test sequence for Leading (TE1.1 leading, CuT middle) 326
Table 123 – Test sequence for Leading (TE2 leading, CuT middle) 326
Table 124 – Test sequence for Leading (TE1.1 leading, CuT end) 327
Table 125 – Test sequence for Leading (CuT leading direction 1) 327
Table 126 – Test sequence for Leading (CuT leading direction 2) 328
Table 127 – Test sequence for Leading (Leading double request) 328
Table 128 – Test sequence for Leading (Leading conflict) 329
Table 129 – Test sequence for Inhibit (single) 330
Table 130 – Test sequence for Inhibit (multiple) 331
Table 131 – Test sequence for confirmation 332
Table 132 – Test sequence for correction single middle vehicle 333
Table 133 – Test sequence for correction two middle vehicles 334
Table 134 – Test sequence for correcting three middle vehicles 335
Table 135 – Test sequence for correcting end vehicle 336
Table 136 – Test sequence for sleep mode 337
Table 137 – Performance of basic ETB events 338
Table 138 – Performance of user request 339

Documents
Document Sharing Hub

Full document details: BS EN IEC 61375-2-8:2021

INTERNATIONAL ELECTROTECHNICAL COMMISSION

ELECTRONIC RAILWAY EQUIPMENT – TRAIN COMMUNICATION NETWORK (TCN) –

Part 2-8: TCN conformance test

FOREWORD

1) The International Electrotechnical Commission (IEC) is a worldwide organization for standardization comprising all national electrotechnical committees (IEC National Committees). The object of IEC is to promote international co-operation on all questions concerning standardization in the electrical and electronic fields. To this end and in addition to other activities, IEC publishes International Standards, Technical Specifications, Technical Reports, Publicly Available Specifications (PAS) and Guides (hereafter referred to as "IEC Publication(s)"). Their preparation is entrusted to technical committees; any IEC National Committee interested in the subject dealt with may participate in this preparatory work. International, governmental and non-governmental organizations liaising with the IEC also participate in this preparation. IEC collaborates closely with the International Organization for Standardization (ISO) in accordance with conditions determined by agreement between the two organizations.
2) The formal decisions or agreements of IEC on technical matters express, as nearly as possible, an international consensus of opinion on the relevant subjects since each technical committee has representation from all interested IEC National Committees.
3) IEC Publications have the form of recommendations for international use and are accepted by IEC National Committees in that sense. While all reasonable efforts are made to ensure that the technical content of IEC Publications is accurate, IEC cannot be held responsible for the way in which they are used or for any misinterpretation by any end user.
4) In order to promote international uniformity, IEC National Committees undertake to apply IEC Publications transparently to the maximum extent possible in their national and regional publications. Any divergence between any IEC Publication and the corresponding national or regional publication shall be clearly indicated in the latter.
5) IEC itself does not provide any attestation of conformity. Independent certification bodies provide conformity assessment services and, in some areas, access to IEC marks of conformity. IEC is not responsible for any services carried out by independent certification bodies.
6) All users should ensure that they have the latest edition of this publication.
7) No liability shall attach to IEC or its directors, employees, servants or agents including individual experts and members of its technical committees and IEC National Committees for any personal injury, property damage or other damage of any nature whatsoever, whether direct or indirect, or for costs (including legal fees) and expenses arising out of the publication, use of, or reliance upon, this IEC Publication or any other IEC Publications.
8) Attention is drawn to the Normative references cited in this publication. Use of the referenced publications is indispensable for the correct application of this publication.
9) Attention is drawn to the possibility that some of the elements of this IEC Publication may be the subject of patent rights. IEC shall not be held responsible for identifying any or all such patent rights.

International Standard IEC 61375-2-8 has been prepared by IEC technical committee 9: Electrical equipment and systems for railways.

The text of this International Standard is based on the following documents:

FDIS	Report on voting
9/2746/FDIS	9/2758/RVD

Full information on the voting for its approval can be found in the report on voting indicated in the above table.

The language used for the development of this International Standard is English.

Documents
Document Sharing Hub

Full document details: BS EN IEC 61375-2-8:2021

This document was drafted in accordance with ISO/IEC Directives, Part 2, and developed in accordance with ISO/IEC Directives, Part 1 and ISO/IEC Directives, IEC Supplement, available at www.iec.ch/members_experts/refdocs. The main document types developed by IEC are described in greater detail at www.iec.ch/standardsdev/publications.

A list of all parts in the IEC 61375 series, published under the general title *Electronic railway equipment – Train communication network (TCN)*, can be found on the IEC website.

The committee has decided that the contents of this document will remain unchanged until the stability date indicated on the IEC website under webstore.iec.ch in the data related to the specific document. At this date, the document will be

- reconfirmed,
- withdrawn,
- replaced by a revised edition, or
- amended.

IMPORTANT – The "colour inside" logo on the cover page of this document indicates that it contains colours which are considered to be useful for the correct understanding of its contents. Users should therefore print this document using a colour printer.

Documents
Document Sharing Hub

Full document details: BS EN IEC 61375-2-8:2021

INTRODUCTION

TCN is an International Standard with the aim of defining interfaces so as to achieve plug-in compatibility:

a) between equipment located in different vehicles or consist, and

b) between equipment and devices located within the same vehicle or consist.

One of the key success factors for the deployment of any technology is standardisation and ensuring interoperability among various implementations. To facilitate interoperability, a conformance test should be implemented.

In this part of IEC 61375, the conformance testing of the ECN and ETB defined in IEC 61375-2-3:2015, IEC 61375-2-5:2014 and IEC 61375-3-4:2014 is specified.

Documents
Document Sharing Hub

Full document details: BS EN IEC 61375-2-8:2021

ELECTRONIC RAILWAY EQUIPMENT – TRAIN COMMUNICATION NETWORK (TCN) –

Part 2-8: TCN conformance test

1 Scope

This part of IEC 61375 applies to all equipment and devices implemented according to IEC 61375-2-3:2015, IEC 61375-2-5:2014 and IEC 61375-3-4:2014, i.e. it covers the procedures to be applied to such equipment and devices when the conformance should be proven.

The applicability of this document to a TCN implementation allows for individual conformance checking of the implementation itself, and is a pre-requisite for further interoperability checking between different TCN implementations.

2 Normative references

The following documents are referred to in the text in such a way that some or all of their content constitutes requirements of this document. For dated references, only the edition cited applies. For undated references, the latest edition of the referenced document (including any amendments) applies.

IEC 60571:2012, *Railway applications – Electronic equipment used on rolling stock*

IEC 61000-4-4:2012, *Electromagnetic compatibility (EMC) – Part 4-4: Testing and measurement techniques – Electrical fast transient/burst immunity test*

IEC 61076-2-101:2012, *Connectors for electronic equipment – Product requirements – Part 2-101: Circular connectors – Detail specification for M12 connectors with screw-locking*

IEC 61076-3-104, *Connectors for electrical and electronic equipment – Product requirements – Part 3-104: Detail specification for 8-way, shielded free and fixed connectors for data transmissions with frequencies up to 2 000 MHz*

IEC 61156-6, *Multicore and symmetrical pair/quad cables for digital communications – Part 6: Symmetrical pair/quad cables with transmission characteristics up to 1 000 MHz – Work area wiring – Sectional specification*

IEC 61375-1:2012, *Electronic railway equipment – Train communication network (TCN) – Part 1: General architecture*

IEC 61375-2-1:2012, *Electronic railway equipment – Train communication network (TCN) – Part 2-1: Wire Train Bus (WTB)*

IEC 61375-2-3:2015, *Electronic railway equipment – Train communication network (TCN) – Part 2-3: TCN communication profile*

IEC 61375-2-5:2014, *Electronic railway equipment – Train communication network (TCN) – Part 2-5: Ethernet train backbone*

Documents
Document Sharing Hub
Full document details: BS EN IEC 61375-2-8:2021

IEC 61375-3-4:2014, *Electronic railway equipment – Train Communication Network (TCN) – Part 3-4: Ethernet Consist Network (ECN)*

ISO/IEC 9646-1:1994, *Information technology – Open Systems Interconnection – Conformance testing methodology and framework – Part 1: General concepts (Also available as ITU-T Recommendation X.290 (1995))*

ISO/IEC 9646-7:1995, *Information technology – Open Systems Interconnection –Conformance testing methodology and framework – Part 7: Implementation Conformance Statements (Also available as ITU-T Recommendation X.296 (1995))*

ISO/IEC 11801 (all parts), *Information technology – Generic cabling for customer premises*

IEEE 802.1AB: 2009*, Station and Media Access Control Connectivity Discovery*

IEEE 802.1AX:2008, *IEEE Standard for Local and metropolitan area networks – Link Aggregation*

IEEE 802.1Qaz:2011*, IEEE Standard for Local and metropolitan area networks – Enhanced Transmission Selection*

IEEE 802.1D:1990, *IEEE Standard for Local and metropolitan area networks – Media Access Control (MAC) Bridges*

IEEE 802.1Q, *IEEE Standard for Local and metropolitan area networks – Virtual Bridged Local Area Networks*

IEEE 802.2*, Logical Link Control*

IEEE 802.3:2012, *Information technology – Telecommunications and information exchange between systems – Local and metropolitan area networks – Specific requirements – Part 3: Carrier sense multiple access with collision detection (CSMA/CD) access*

IEEE 802.3az*, Energy Efficient Ethernet*

IETF RFC 768, *User Datagram Protocol*

IETF RFC 791*, INTERNET PROTOCOL*

IETF RFC 792, *INTERNET CONTROL MESSAGE PROTOCOL*

IETF RFC 793, *TRANSMISSION CONTROL PROTOCOL*

IETF RFC 826, *An Ethernet Address Resolution Protocol*

IETF RFC 1034, *DOMAIN NAMES – CONCEPTS AND FACILITIES*

IETF RFC 1035, *DOMAIN NAMES – IMPLEMENTATION AND SPECIFICATION*

IETF RFC 1213*, Management Information Base for Network Management of TCP/IP-based internets: MIB-II*

IETF RFC 1305, *Network Time Protocol (Version 3) Specification,* Implementation and Analysis

IETF RFC 1361, *Simple Network Time Protocol (SNTP)*

Documents
Document Sharing Hub

Full document details: BS EN IEC 61375-2-8:2021

IETF RFC 1901, *Introduction to Community-based SNMPv2*

IETF RFC 1905, *Protocol Operations for Version 2 of the Simple Network Management Protocol (SNMPv2)*

IETF RFC 1906, *Transport Mappings for Version 2 of the Simple Network Management Protocol (SNMPv2)*

IETF RFC 1918*, Address Allocation for Private Internets*

IETF RFC 2131, *Dynamic Host Configuration Protocol*

IETF RFC 2236*, Internet Group Management Protocol, Version 2*

IETF RFC 2365, *Administratively Scoped IP Multicast*

IETF RFC 2474, *Definition of the Differentiated Services Field (DS Field) in the IPv4 and IPv6 Headers*

IETF RFC 2544, *Benchmarking Methodology for Network Interconnect Devices*

IETF RFC 3203, *DHCP reconfigure extension*

IETF RFC 3986*, Uniform Resource Identifier (URI): Generic Syntax*

IETF RFC 4122*, A Universally Unique IDentifier (UUID) URN Namespace*

TIA/EIA-568-B*, Commercial Building Telecommunications Cabling Standard*

ANSI X3.263:1995, *Information Technology – Fibre Distributed Data Interface (FDDI) – Token Ring Twisted Pair Physical Layer Medium Dependent (TP-PMD)*

3 Terms, definitions, symbols and abbreviated terms

3.1 Terms and definitions

For the purposes of this document, the terms and definitions given in IEC 61375-2-3, IEC 61375-2-5 and IEC 61375-3-4 apply.

ISO and IEC maintain terminological databases for use in standardization at the following addresses:

- IEC Electropedia: available at http://www.electropedia.org/
- ISO Online browsing platform: available at http://www.iso.org/obp

3.2 Symbols and abbreviated terms

For the purposes of this document, the symbols and abbreviated terms given in IEC 61375-2-3, IEC 61375-2-5 and IEC 61375-3-4 apply.

Documents
Document Sharing Hub

Full document details: BS EN IEC 61375-2-8:2021

4 Conformance test: approach, requirements and boundaries

4.1 Approach

4.1.1 General

This document specifies a general methodology for testing the conformance to the TCN protocol standard of products in which the standard is claimed to be implemented.

This document is organised into clauses structured into different phases of the conformance testing process; these phases being characterised by the following roles:

a) the specification of abstract test suites for particular TCN protocols according to ISO/IEC 9646-1;

b) the derivation of executable test suites and associated testing tools according to ISO/IEC 9646-7.

Annex A specifies the rules on clients and laboratory specifying:

c) the role of a client of a test laboratory, having an implementation of TCN protocols to be tested;

d) the operation of conformance testing, culminating in the production of a conformance test report which gives the results in terms of the test suite(s) used and the relevant documentation produced.

In all clauses of this document, the scope is limited in order to meet the following objectives:

e) to achieve an adequate level of confidence in the tests as a guide to conformance;

f) to achieve comparability between the results of the corresponding tests applied in different places at different times;

g) to facilitate communication between the parties responsible for the roles described above.

Each objective involves the framework for development of TCN test suites, as listed hereinafter:

h) how they should relate to the various types of conformance requirement;

i) the types of test to be standardised and the types not needing standardisation;

j) the criteria for selecting tests for inclusion in a conformance test suite;

k) the notation to be used for defining tests;

l) the structure of a test suite.

Certification, an administrative procedure which may follow conformance testing, is outside the scope of this document.

Requirements for procurement and contracts are outside the scope of this document.

4.1.2 Requirements

4.1.2.1 General

In the context of TCN, a real system is said to exhibit conformance if it complies with the requirements of applicable TCN standard clauses in its communication with a reference system, i.e. the tester.

A TCN standard is a set of interrelated clauses which, together, define behaviour of TCN systems in their communication. Conformance of an IUT will, therefore, be expressed at two levels, conformance to each individual clause, and conformance to the set of clauses.

Documents
Document Sharing Hub

Full document details: BS EN IEC 61375-2-8:2021

The following clauses define the conformance requirements and classify them according to attributes and into feasible groups. Attributes and grouping are defined from the general point of view with reference to a TCN specification itself and from the IUT point of view. In the second case, the requirement shall be declared in the appropriate PICS and PIXIT.

4.1.2.2 Conformance requirements

The conformance requirements can be:

a) mandatory requirements: these are to be observed in all cases;

b) conditional requirements: these are to be observed if the conditions, set out in the clause, apply;

c) options: these can be selected to suit the implementation, provided that any requirements applicable to the option are observed.

TCN essential functionality are mandatory requirements; additional functionality can be either conditional or optional requirements.

Furthermore, conformance requirements can be stated:

d) positively: they state what shall be done;

e) negatively (prohibitions): they state what shall not be done;

f) optionally: they state what can be done.

Finally, conformance requirements fall into two groups:

g) static conformance requirements;

h) dynamic conformance requirements;

these are discussed in 4.1.2.3 and 4.1.2.4, respectively.

4.1.2.3 Static conformance requirements

To facilitate interoperability, static conformance requirements define the allowed minimum capabilities of an implementation. These requirements may be at a broad level, such as the grouping of functional units and options into protocol classes, or at a detailed level, such as a range of values that have to be supported for specific parameters of timers.

Static conformance requirements and options in TCN parts can be of two varieties:

a) those which determine the capabilities to be included in the implementation of the particular protocol;

b) those which determine multi-layer dependencies, for example those which place constraints on the capabilities of the underlying layers of the system in which the protocol implementation resides. These are likely to be found in upper layer parts (e.g. network management versus real time protocols).

All capabilities not explicitly stated as static conformance requirements are to be regarded as optional.

4.1.2.4 Dynamic conformance requirements

Dynamic conformance requirements are all those requirements (and options) which determine what observable behaviour is permitted by the relevant TCN part in instances of communication. They form the bulk of each TCN protocol document. They define the set of allowable behaviours of an implementation or real system. This set defines the maximum capability that a conforming implementation or real system can have within the terms of the TCN protocol document.

Documents
Document Sharing Hub

Full document details: BS EN IEC 61375-2-8:2021

A system exhibits dynamic conformance in an instance of communication if its behaviour is a member of the set of all behaviours permitted by the relevant TCN protocol part in a way which is consistent with the PICS.

4.1.2.5 A conforming system

A conforming system or implementation is one which is shown to satisfy both static and dynamic conformance requirements, consistent with the capabilities stated in the PICS, for each protocol declared in the system conformance statement.

4.1.2.6 Interoperability and conformance

The primary purpose of conformance testing is to increase the probability that different implementations are able to inter-operate.

Successful interoperability of two or more real open systems is more likely to be achieved if they all conform to the same subset of a TCN part, or to the same selection of TCN parts, than if they do not.

To prepare two or more systems to successfully inter-operate, it is recommended that a comparison is made of the system conformance statements and PICSs of these systems.

If there is more than one version of a relevant TCN part indicated in the PICSs, the differences between the versions need to be identified and their implications for consideration, including their use in combination with other parts.

While conformance is a necessary condition, it is not on its own a sufficient condition to guarantee interoperability capability. Even if two implementations conform to the same TCN protocol part, they may fail to interoperate because of factors outside the scope of this document.

Trial interoperability is recommended to detect these factors. Further information to assist interoperability between two systems can be obtained by extending the PICS comparison to other relevant information, including test reports and PIXIT. The comparison can focus on:

a) additional mechanisms claimed to work around known ambiguities or deficiencies not yet corrected in the TCN standard or in peer real systems, for example solution of multi-layer problems;
b) selection of free options which are not taken into account in the static conformance requirements of the TCN parts;
c) the existence of timers not specified in the TCN parts and their associated values.

NOTE The comparison can be made between two individual systems, between two or more types of product, or, for the PICS comparison only, between two or more specifications for procurement, permissions to connect, etc.

4.1.3 Requirements declaration statements for an Item Under Test (IUT)

4.1.3.1 Protocol implementation conformance statement (PICS)

To evaluate the conformance of a particular implementation, it is necessary to have a statement of the capabilities and options which have been implemented, and any features which have been omitted, so that the implementation can be tested for conformance against relevant requirements, and against those requirements only. Such a statement is called a Protocol Implementation Conformance Statement (PICS).

In a PICS there should be a distinction between the following categories of information which it may contain:

a) information related to the mandatory, optional and conditional static conformance requirements of the protocol itself;

AVA Documents
Document Sharing Hub

b) information related to the mandatory, optional and conditional static conformance requirements for multi-layer dependencies.

If a set of interrelated TCN protocol has been implemented in a system, a PICS is needed for each protocol. A system conformance statement will also be necessary, summarising all protocols in the system for each of which a distinct PICS is provided.

4.1.3.2 Protocol implementation extra information for testing (PIXIT)

In order to test a protocol implementation, the test laboratory will require information relating to the IUT and its testing environment in addition to that provided by the PICS. This Protocol Implementation eXtra Information for Testing (PIXIT) will be provided by the client submitting the implementation for testing, as a result of consultation with the test laboratory.

The PIXIT may contain the following information:

a) information needed by the test laboratory in order to be able to run the appropriate test suite on the specific system (e.g. information related to the test method to be used to run the test cases, addressing information);
b) information already mentioned in the PICS and which needs to be made precise (e.g. a timer value range which is declared as a parameter in the PICS should be specified in the PIXIT);
c) information to help determine which capabilities stated in the PICS as being supported are testable and which are untestable;
d) other administrative matters (e.g. the IUT identifier, reference to the related PICS).

The PIXIT should not conflict with the appropriate PICS.

The abstract test suite specifier, test implementer and test laboratory will all contribute to the development of the PIXIT pro-forma.

4.2 Boundaries

4.2.1 General

Conformance testing as discussed in this document is focused on testing for conformance to TCN clauses as they are specified in IEC 61375-2-3:2015, IEC 61375-2-5:2014 and IEC 61375-3-4:2014.

In principle, the objective of conformance testing is to establish whether the implementation being tested conforms to the specification in the relevant clause. Practical limitations make it impossible to be exhaustive, and economic considerations may restrict testing still further.

Therefore, this document distinguishes four types of testing, according to the extent to which they provide an indication of conformance:

a) basic interconnection tests, which provide prima facie evidence that an IUT conforms;
b) capability tests, which check that the observable capabilities of the IUT are in accordance with the static conformance requirements and the capabilities claimed in the PICS;
c) behaviour tests, which endeavour to provide testing which is as comprehensive as possible over the full range of dynamic conformance requirements within the capabilities of the IUT;
d) conformance resolution tests, which probe in depth the conformance of an IUT to particular requirements, to provide a definite yes/no answer and diagnostic information in relation to specific conformance issues; such tests are not covered by this document.

The tests a), b), c) and d) are described in detail by the following subclauses.

Relations to interoperability and performance are hereinafter considered and defined to clarify their boundaries.

AVA Documents
Document Sharing Hub

4.2.2 Basic interconnection tests

4.2.2.1 General

Basic interconnection tests provide limited testing of an IUT to establish that there is sufficient conformance for interconnection to be possible, without trying to perform thorough testing.

4.2.2.2 Applicability of basic interconnection tests

Basic interconnection tests are appropriate:

a) for detecting severe cases of non-conformance;

b) as a preliminary filter before undertaking more costly tests;

c) to give a prima facie indication that an implementation which has passed full conformance tests in one environment still conforms in a new environment (e.g. before testing a Layer (N)-implementation, to check that a tested Layer (N – 1)-implementation has not undergone any severe change due to being linked to the Layer (N)-implementation);

d) for use by users of implementations, to determine whether the implementations appear to be usable for communication with other conforming implementations, for example as a preliminary to data interchange.

Basic interconnection tests are inappropriate:

e) as a basis for claims of conformance by the supplier of an implementation;

f) as a means of arbitration to determine causes for communications failure.

Basic interconnection tests are a standardised subset of a conformance test suite (including capability and behaviour tests). They can be used on their own or together with a conformance test suite. The existence and execution of basic interconnection tests are optional.

4.2.3 Capability tests

4.2.3.1 General

Capability tests provide limited testing of each of the static conformance requirements to ascertain what capabilities of the IUT can be observed and to check that those observable capabilities are valid with respect to the static conformance requirements and the PICS.

4.2.3.2 Applicability of capability tests

Capability tests are appropriate:

a) to check as far as possible the consistency of the PICS with the IUT;

b) as a preliminary filter before undertaking more in-depth and costly testing;

c) to check that the capabilities of the IUT are consistent with the static conformance requirements;

d) to enable efficient selection of behaviour tests to be made for a particular IUT;

e) when taken together with behaviour tests, as a basis for claims of conformance.

Capability tests are inappropriate:

f) on their own, as a basis for claims of conformance by the supplier of an implementation;

g) for testing in detail, the behaviour associated with each capability which has been implemented or not implemented;

h) for resolution of problems experienced during live usage or where other tests indicate possible non-conformance even though the capability tests have been satisfied.

Documents
Document Sharing Hub

Full document details: BS EN IEC 61375-2-8:2021

Capability tests are standardised within a conformance test suite. They can either be separated into their own test group(s) or merged with the behaviour tests.

4.2.4 Behaviour tests

Behaviour tests test an implementation as thoroughly as is practical, over the full range of dynamic conformance requirements. Since the number of possible combinations of events and timing of events is infinite, such testing cannot be exhaustive. There is a further limitation, namely that these tests are designed to be run collectively in a single test environment, so that any faults which are difficult or impossible to detect in that environment are likely to be missed. Therefore, it is possible that a non-conforming implementation passes the conformance test suite; one aim of the test suite design is to minimise the number of times that this occurs.

Behaviour tests with capability tests are the basis for the conformance assessment process.

Behaviour tests are inappropriate:

a) for resolution of problems experienced during live usage or where other tests indicate possible non-conformance even though the behaviour tests have been satisfied.

Behaviour tests are standardised as the bulk of a conformance test suite.

Behaviour tests include tests for valid behaviour by the IUT in response to valid, inopportune and syntactically invalid protocol behaviour by the real tester. This includes testing the rejection by the IUT of attempts to use features (capabilities) which are stated in the PICS as being not implemented. Thus, capability tests do not need to include tests for capabilities omitted from the PICS.

4.2.5 Conformance resolution tests

Conformance resolution tests provide diagnostic answers, as near to definitive as possible, to the resolution of whether an implementation satisfies particular requirements. Because of the problems of exhaustiveness, the definite answers are gained at the expense of confining tests to a narrow field.

The test architecture and test method will normally be chosen specifically for the requirements to be tested and need not be ones that are generally useful for other requirements. They may even be ones that are regarded as being unacceptable for (standardised) abstract conformance test suites, for example involving implementation-specific methods using, say, the diagnostic and debugging facilities of the specific operating system.

The distinction between behaviour tests and conformance resolution tests may be illustrated by the case of an event such as a reset. The behaviour tests may include only a representative selection of conditions under which a reset might occur and may fail to detect incorrect behaviour in other circumstances. The conformance resolution tests would be confined to conditions under which incorrect behaviour was already suspected to occur and would confirm whether or not the suspicions were correct.

Conformance resolution tests are appropriate:

a) for providing a yes/no answer in a strictly confined and previously identified situation (e.g. during implementation development, to check whether a particular feature has been correctly implemented, or during operational use, to investigate the cause of problems);
b) as a means for identifying and offering resolutions for deficiencies in a current conformance test suite.

Conformance resolution tests are inappropriate:

c) as a basis for judging whether or not an implementation conforms overall.

Documents
Document Sharing Hub

Full document details: BS EN IEC 61375-2-8:2021

Conformance resolution tests are not standardised. As a by-product of conformance testing, errors and deficiencies in protocol parts may be identified.

4.2.6 Interpretation of clauses/subclauses and statements

4.2.6.1 General

The TCN described in IEC 61375-2-3, IEC 61375-2-5 and IEC 61375-3-4 is subject to a sort of interpretation to translate some clauses/subclauses and requirements into realisable test suites. The complexity of most TCN protocols makes exhaustive testing impractical on both technical and economic grounds. To cope with a real implementation and extract from IEC 61375-2-3, IEC 61375-2-5 and IEC 61375-3-4, all the relevant tests and some criteria were used. The criteria were grouped according to their characteristics:

a) imperatives;

b) illustrative;

c) options;

d) weak statements.

The following subclauses describe the criteria.

4.2.6.2 Imperatives

4.2.6.2.1 General

Imperatives are those words and phrases commanding that something shall be provided and are classified as mandatory. They are:

a) shall: dictates the provision of a functional capability;

b) must: establishes performance requirements or constraints;

c) is required: is a specification statement written in the passive voice;

d) is applicable: includes, by reference, standards or other documentation as an addition to the requirements being specified;

e) responsible for: is a requirement written for architectures already defined. As an example, "In extended reply delay applications, the master is responsible for spacing the master frames so that the minimum time to transmit to a slave frame and the following master frame is greater than T_safe.";

f) will: is generally used to cite things that the operational or development environment are to provide to the capability being specified. For example, "If it was a strong master, it will signal its demoting to all nodes and it will remain in control of the bus as a weak master until a strong node is appointed";

g) should: when it is used, the specification statement is considered to be very weak. For example, "Devices supporting the message data capability should have a device address smaller than 256".

4.2.6.2.2 Continuance

Phrases that follow an imperative and introduce the specification of requirements at a lower level, for a supplemental requirement count.

a) as follows,

b) below,

c) following,

d) in particular,

e) listed,

f) support.

Documents
Document Sharing Hub

Full document details: BS EN IEC 61375-2-8:2021

Phrases that introduces temporal indication, that may lead to definite or indefinite actions, or enumerative that may lead to infinite test cases.

g) for each,

h) while.

The requirement containing temporal or enumerative is tested with a finite time or finite sample.

4.2.6.3 Illustrative

This is information within the requirements document. The data and information pointed to by illustrative strengthens the document's specification statements and whenever possible is used as sample category input for the test. Namely:

a) figure;

b) table;

c) for example;

d) note.

4.2.6.4 Options

Options is the category of words that give the developer latitude in satisfying the specification statements that contain them. This category clearly forms the basis for the option statements declaration into the PICS. However, those requirements containing such a category of words loosen the specification, increase the risk of non-interoperability, and widen the tests sets.

a) can (Example: Gateways with Bus_Administrator capability can synchronise the busses.);

b) may (Example: Class 5 devices may offer the Bus_Administrator capability.);

c) optionally (Example: The User_Programmable capability is optional.);

d) exclusion (Example: while the IUT is naming the nodes, one node responds to the naming frame but not to the status request or sends a wrong naming response frame).

Options shall drive the PICS production.

4.2.6.5 Weak statements

Weak statements are apt to cause uncertainty leaving room for multiple interpretations, such wording provides a basis for expanding a requirement or adding future requirements. For the extent of testing, this category generates test with test cases chosen among a representative set of samples. However, by no means such sets fully represent all significant cases foreseen by the clause under test.

a) adequate,

b) be able to,

c) be capable,

d) effective,

e) normal,

f) provide for.

4.2.7 Relation to interoperability

One of the aims of this conformance test is to lead to comparability and wide acceptance of test results produced by different testers, and thereby minimise the need for repeated conformance testing of the same system. Interoperability plays a principal role, since the conformance test is aimed to facilitate interoperability, it has been taken into account with the following domains in Table 1:

Documents
Document Sharing Hub

Full document details: BS EN IEC 61375-2-8:2021

Table 1 – Relation to interoperability

Domain	Description
Application interoperability	the ability of TCN to provide a consistent implementation of the syntax and semantics of the data which are interchanged
Protocol interoperability	the ability of TCN to interchange PDUs via the communications platform
Service interoperability	the ability of TCN to support a subset of its intended services
User perceived interoperability	the ability of the service user (human, application, machine) to exchange information via the TCN

No provision is made in this document to implement or recommend an interoperability test.

4.2.8 Relation to performance test

Performance attributes relate deeply to services given by the TCN, even though this conformance test does not intend to implement a performance test, nevertheless performance attributes were taken into account in the following way in Table 2.

Table 2 – Relation to performance test

Performance attribute	Description
Speed	This performance attribute describes the time interval that is used to perform the function or the rate at which the function is performed. (The function may or may not be performed with the desired accuracy.). An example of speed attribute evaluation is: freshness time supervision test
Accuracy	This performance attribute describes the degree of correctness with which the function is performed, no matter if the function is or is not performed with the desired speed. An example of accuracy evaluation is: the receiver hysteresis test
Dependability	This performance attribute describes the degree of certainty (or surety) with which the function is performed regardless of speed or accuracy, but within a given observation interval. An example of dependability attribute evaluation is: Connection stability for the entire inauguration time

No provision is made in this document to implement or recommend a performance test as it is defined by IEC 60571.

4.2.9 Definition of test cases

Test cases and inspection items derived from the requirements and outlined in this document can be categorized into verification activities, measurement activities and test activities. The characteristics of these activities are defined in Table 3.

Documents
Document Sharing Hub

Full document details: BS EN IEC 61375-2-8:2021

Table 3 – Test case categories

Category	Description	Keywords	Example
Verification activities	Verification of procedures, processes and documents	verification, verify	Verify that …
Measurement activities	Measurement and recording of physical quantities (e.g. size, distance, voltage, current, temperature, time). Does not include a pass or fail verdict.	measurement, measure	Measure the ….
Test activities	Check of properties or measurement results. Includes a pass or fail verdict.	test, check	Check that … Test the …

4.3 Conformance assessment process outline

4.3.1 General

The main feature of the conformance assessment process is a configuration of equipment allowing exchanges of information between the IUT and a real tester. These are controlled and observed by the real tester.

In a conceptual outline, conformance testing should include several steps, involving both static conformance reviews and live testing phases, culminating in the production of a test report which is as thorough as is practical.

These steps are:

- compilation of the PICS;
- compilation of the PIXIT;
- test selection and parameterisation;
- basic interconnection testing (optional);
- capability testing;
- behaviour testing;
- review and analysis of test results;
- synthesis, conclusions and conformance test report production.

4.3.2 Analysis of results, outcomes and verdicts

The observed outcome (of the test execution) is the series of events which have occurred during execution of a test case; it includes all input to and output from the IUT at the points of control and observation.

The foreseen outcomes are identified and defined by the abstract test case specification taken in conjunction with the protocol part. For each test case, there may be one or more foreseen outcomes. Foreseen outcomes are defined primarily in abstract terms.

A verdict is a statement of pass, fail or inconclusive to be associated with every foreseen outcome in the abstract test suite specification.

The analysis of results is performed by comparing the observed outcomes with foreseen outcomes.

Documents
Document Sharing Hub

The verdict assigned to an observed outcome is that associated with the matching foreseen outcome. If the observed outcome is unforeseen then the abstract test suite specification will state what default verdict shall be assigned.

The means for the comparison of the observed outcomes with the foreseen outcomes are beyond the scope of this document.

NOTE Amongst the possibilities are:

a) manual or automated comparison (or a mixture);

b) comparison at or after execution time;

c) translating the observed outcomes into abstract terms for comparison with the foreseen outcomes or translating the foreseen outcomes into the terms used to record the observed outcomes.

The verdict will be pass, fail or inconclusive:

a) pass means that the observed outcome satisfies the test purpose and is valid with respect to the relevant TCN parts and with respect to the PICS;

b) fail means that the observed outcome is syntactically invalid or inopportune with respect to the relevant TCN parts or the PICS;

c) inconclusive means that the observed outcome is valid with respect to the relevant TCN parts but prevents the test purpose from being accomplished.

The verdict assigned to a particular outcome will depend on the test purpose and the validity of the observed protocol behaviour.

The verdicts made in respect of individual test cases will be synthesised into an overall summary for the IUT based on the test cases executed.

4.4 Mapping of IUT types to conformance test suites

Because this document defines conformance testing suites applicable for different IUT types, a mapping of IUT types to conformance test suites will indicate which test suites are mandatory or optional as it is listed in Table 4.

Documents
Document Sharing Hub

Full document details: BS EN IEC 61375-2-8:2021

Table 4 – Mapping conformance testing suites to IUT types

Conformance test IUT Type	Basic interface test	End device test	ECN equipped consist test	ETBN test	TRDP test	SDTv2 test	ETB-equipped consist test
Consist local end device	M	O					
Train communication end device	M				O	O	
Train topology aware end device	M	O			M	O	
Repeater	M		O				
Unmanaged consist switch	M		O				
Managed consist switch	M		O				
Router	M		O				
ETBN	M		O[1)]	M	M[1)]	M[1)]	
Consist							M
O : optional M : mandatory [1)] If ETBN includes ECSP.							

5 Basic interface test

5.1 Scope

This clause specifies conformance test cases for physical layer functions and basic communication for devices connected to ECN or ETB as given in IEC61375-2-5 and IEC 61375-3-4.

5.2 PICS pro-forma

5.2.1 General

The PICS provides a statement of the capabilities and options which have been implemented, and any features which have been omitted, see 4.1.3.1. Instructions about filling the PICS pro-forma are given in Annex B.

5.2.2 PICS Tables

5.2.2.1 Identification of PICS

Ref	Question	Response
1	Date of statement	
2	PICS serial number	

Documents
Document Sharing Hub

Full document details: BS EN IEC 61375-2-8:2021

5.2.2.2 Identification of the implementation under test

Ref	Question	Requirement	Response
1	Implementation name	M	
2	Version number	M	
3	Special configuration	O	
4	Power supply voltage	M	
5	Power supply current	M	
6	Other information	O	

NOTE 1 Implementation name refers to the identifier of the IUT as indicated by the client. The specific conformance test is applied to the entity identified by the implementation name.

NOTE 2 This is the version number of the IUT. When a version number is defined for an IUT, no subsystem which composes it can progress without a change of this figure (the architecture is frozen and constitutes a configuration).

NOTE 3 Indicated if PIXIT is provided for this IUT.

NOTE 4 Indicates the applicable power supply voltage. Power supply voltage is chosen amongst the values specified in IEC 60571.

NOTE 5 Other information the client considers relevant for IUT identification.

5.2.2.3 Identification of the IUT supplier and/or test laboratory client

Ref	Question	Requirement	Response
1	Organisation name	M	
2	Contact name(s)	M	
3	Address:	M	
4	Telephone number	M	
5	Fax number	M	
6	e-mail address	M	
7	Other information	M	

If the IUT supplier and the test laboratory client are not the same entity, the PICS shall be agreed between the supplier and the test laboratory client.

5.2.2.4 Identification of the standards

Ref	Question	Response
1	Specification document title	
2	Specification document IEC reference number	
3	Specification document date of publication	
4	Specification document version number	
5	Conformance test document title	
6	Conformance test document number	
7	Conformance test document date of publication	
8	Conformance test document version number	

Documents
Document Sharing Hub
Full document details: BS EN IEC 61375-2-8:2021

5.2.2.5 Global statement of conformance

Ref	Question	Requirement	Implementation
1	Are all mandatory capabilities implemented?	M	[ ]

NOTE Answering "No" to this section indicates non-conformance to the protocol specification. Non-supported mandatory capabilities are to be identified in the PICS, with an explanation of why the implementation is non-conforming.

5.3 Testing framework

The test is executed in a set-up with an instrumented IUT providing one or more Ethernet interfaces, a tester equipment for Ethernet/IP/UDP/TCP frame sending and receiving, a 100 m railway suitable Ethernet cable connecting IUT and tester equipment, and necessary measurement instruments.

NOTE Test set-up including Ethernet cable characteristics are listed in the specific IUT's report, see Annex C.

5.4 Physical layer test

5.4.1 Test purpose

Test the correctness of mechanical and electrical parameters of the physical layer network interface.

5.4.2 Inspection of the Hardware Ethernet interface

Compliance with the physical layer requirements as specified in IEC 61375-3-4:2014, 4.10.2.1, 4.10.3 and IEC 61375-2-5:2014, 4.2.2 shall be demonstrated by the following test:

a) Check that the physical Ethernet interface of the IUT is set to 100FDX.

b) Check that the IUT has a MAC address set on delivery. (The MAC address shall be unique worldwide).

c) Optional: check that the IUT supports Power over Ethernet (PoE).

d) Check that ETB ports are bypassed via relays.

e) Check that the IUT support 100 m cable length over CAT5e cables.

f) Check that a single point of failure from the IUT does not disable more than the affected end devices (for example by executing burst test, see 5.6.2).

5.4.3 Inspection of the mechanical Ethernet interface construction

Compliance with the physical layer mechanical requirements as specified in IEC 61375-3-4:2014, 4.10.2.2, 4.10.2.3 and 4.10.2.4 shall be demonstrated by the following test:

a) Check that the IUT uses a M12 D-coded female connector.

b) Check that the M12 D-coded connector is located at the front panel.

c) Check that the M12 socket has an adequate ground connection providing lasting connection of the shield to ground.

d) Check that the IUT internal Ethernet signal path (length and characteristics of internal Ethernet cabling, number of intermediate connectors) is documented.

e) Check that all connectors are labelled, also the ground connector (see IEC 60571:2012).

f) Check that the M12 and the casing screws are tightened.

g) Check that the cable shield and the connector shield are connected to chassis earth. A cable shield should be connected on a 360° circular basis in the connector.

h) Check that a RJ45 connector is only used for connecting Temporary End Devices.

AVA Documents
Document Sharing Hub

5.4.4 Check of electrical Ethernet interface design

a) Check that the temperature range class TX according to IEC 60571:2012 (-40 to +85°C) for electronic parts is used.

b) Check that the transceiver (PHY) and the transformer is compliant to IEEE 802.3. Check the correct Ethernet termination and common mode rejection.

If possible, the components shall be inspected on the PCB. If not feasible the schematics have to be checked. If Off-the-shelf units are used, the manufacturer has to provide a reasonable data sheet which shows the conformance with the temperature range and IEEE 802.3.

5.4.5 Check of Ethernet interface characteristics

This test is optional and can only be applied if the DUT supports auto negotiation.

a) Measure that the single link pulse meets the waveform requirements from IEEE 802.3.

b) Measure that the fast link pulse burst indicates that the interface supports at least 100BASE-TX full duplex.

c) Check that all features which are specified by the fast link pulse burst code are supported by the IUT.

5.4.6 Ethernet signal wave form test (IEEE standard)

Measure that the Ethernet signal parameters

- Amplitude
- zero Volt axis symmetry
- Rise and fall times
- Duty cycle distortion
- Transmitter jitter
- Waveform overshoot

are in the ranges, which are specified in IEEE 802.3, IEEE 802.3az and ANSI X3.263.

5.4.7 Ethernet signal wave form test (amplified signals, optional)

Compliance with the Ethernet signal wave form test which is specified in IEC 61375-3-4:2014, Annex C.

Measure that the Ethernet signal parameters

- Amplitude
- zero Volt axis symmetry
- Rise and fall times
- Duty cycle distortion
- Transmitter jitter
- Waveform overshoot

are in the specified ranges.

5.4.8 Auto-Crossover- and Auto-Sensing-Test (only for switches)

Check that the IUT perform Auto-Crossover and Auto-Sensing.

Documents
Document Sharing Hub

Full document details: BS EN IEC 61375-2-8:2021

5.5 Basic communication protocol test

5.5.1 Test purpose

Test the ability of sending and receiving UDP and TCP packets.

5.5.2 Simple communication test

This measurement shall be executed with a cable length of 100 m, which is specified in IEEE 802.3.

a) Check that the IUT supports UDP communication.

b) Check that the IUT supports TCP communication.

5.5.3 UDP rising payload test (only for End Devices)

This measurement shall be executed with a cable length of 100 m, which is specified in IEEE 802.3.

a) Measure the maximum supported payload size for UDP datagrams.

b) Check that the IUT handles a payload size of minimum 8kBytes.

5.5.4 TCP rising payload test (only for End Devices)

This measurement shall be executed with a cable length of 100 m, which is specified in IEEE 802.3.

a) Measure the maximum supported payload size for TCP datagrams.

5.5.5 UDP long term test (only for End Devices)

This measurement shall be executed with a cable length of 100 m, which is specified in IEEE 802.3.

a) Check that the IUT communication with 100 m cable length is stable over a time of 60 min.

b) Check that the long-term test will be done with the maximum supported payload size with an upper limit of 32 kBytes.

c) Measure the frame error rate and check that it is below 10^{-6} (1 error per 1 million frames).

5.6 Communication reliability tests

5.6.1 Test purpose

Test the reliability of the communication under railway specific stress conditions.

5.6.2 Burst immunity test

5.6.2.1 Test setup

These measurements shall be executed with a cable length of 100 m, which is specified in IEEE 802.3.

For signal and control ports test level 4 is specified using capacitive clamp (IEC 61000-4-4:2012, Figure 1) with 0,5 m distance to the DUT.

The defined test level 4 has the following parameters, see Figure 1

- Rise time: 5 ns +-30 %
- Impulse duration (50 % of peak value): 50 ns +-30 %
- Peak value 2 kV +-10 % (positive and negative polarity)

Documents
Document Sharing Hub

Full document details: BS EN IEC 61375-2-8:2021

- Repetition 5 kHz +-20 %
- Duration 15 ms
- Period 300 ms

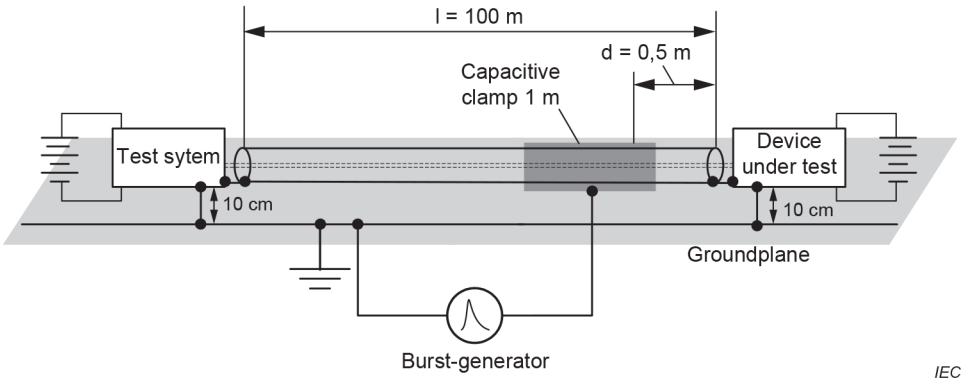

Figure 1 – Setup for burst immunity test

5.6.2.2 Test procedure

Connect the DUT to the burst test environment and power on the DUT.

- Switch on the burst generator configured with the parameters above, switch to positive polarity
- Start the Communication Test with “long term test configuration” at the Test System
- Stop the test after 10 min
- Repeat the test for negative polarity

5.6.2.3 Measurements

Check that the Ethernet port is stable against EMC stress with fast transients (bursts) according to IEC 61000-4-4:2012, by measuring that there are no transmission errors over a minimum period of 1 min or minimum amount of 40 000 frames for each burst polarity.

NOTE Since the chance to hit an Ethernet telegram is lower than 5 % per period (15 ms / 300 ms = 0,05) the minimum test duration for each burst polarity is n >= 1 000 transmit and receive cycles of a 32kBytes message (minimum more than 40 000 frames).

5.6.3 Ethernet interface isolation test

a) Check that the signals are isolated against the shielding.

b) Check that are all ports are isolated against each other.

6 Conformance test of End Device

6.1 General

This clause defines conformance requirements for conformance testing for end devices as given in IEC 61375-2-3, IEC 61375-2-5 and IEC 61375-3-4. See also Table 6 through Table 46.

Those requirements are used to derive test suites and test cases in order to determine whether a system, in this case, a unit connected to one Consist Network or to one set of Consist Networks, complies with the requirements.

Figure 2 gives an overview of the End Device conformance testing process.

Documents
Document Sharing Hub
Full document details: BS EN IEC 61375-2-8:2021

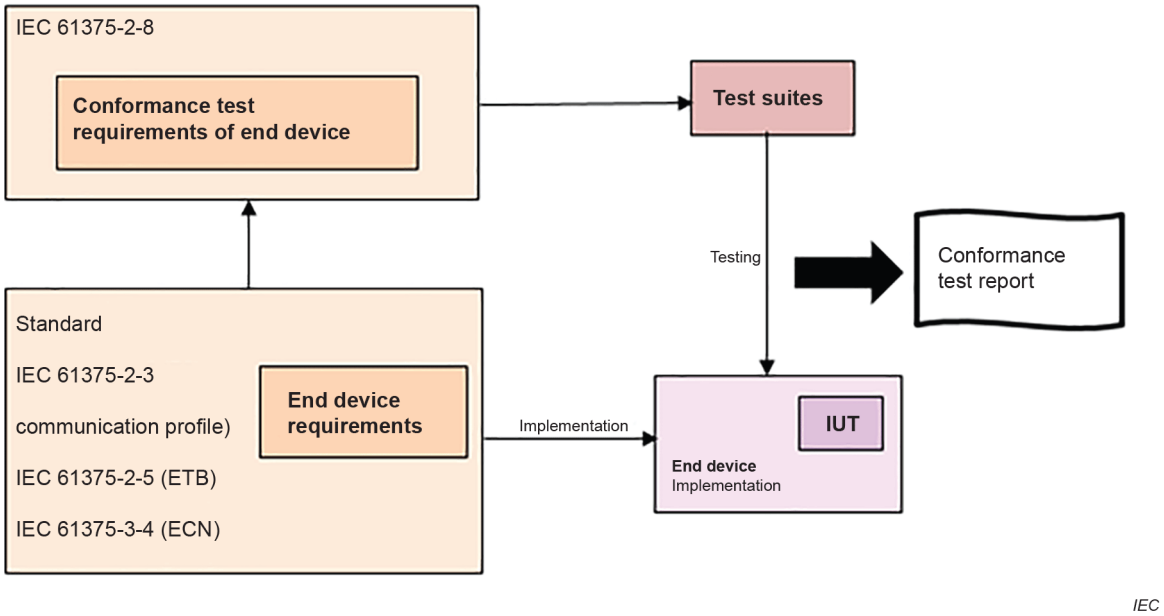

Figure 2 – End Device conformance testing process

6.2 Related requirements

As given in IEC 61375-2-3, IEC 61375-2-5 and IEC 61375-3-4.

6.3 IUT and Test scope

The Implementation Under Test (IUT) implements the base standard(s) being tested, so in this clause, the end device (ED).

The end device is a unit that could be connected to one Consist Network or to one set of Consist Networks prepared for redundancy reasons. However, the end device could be connected directly to ETBN (Ethernet Train Backbone Node).

Figure 3 shows a consist topology and a logical view of the ECN, in order to clarify where an end device is located.

Documents
Document Sharing Hub
Full document details: BS EN IEC 61375-2-8:2021

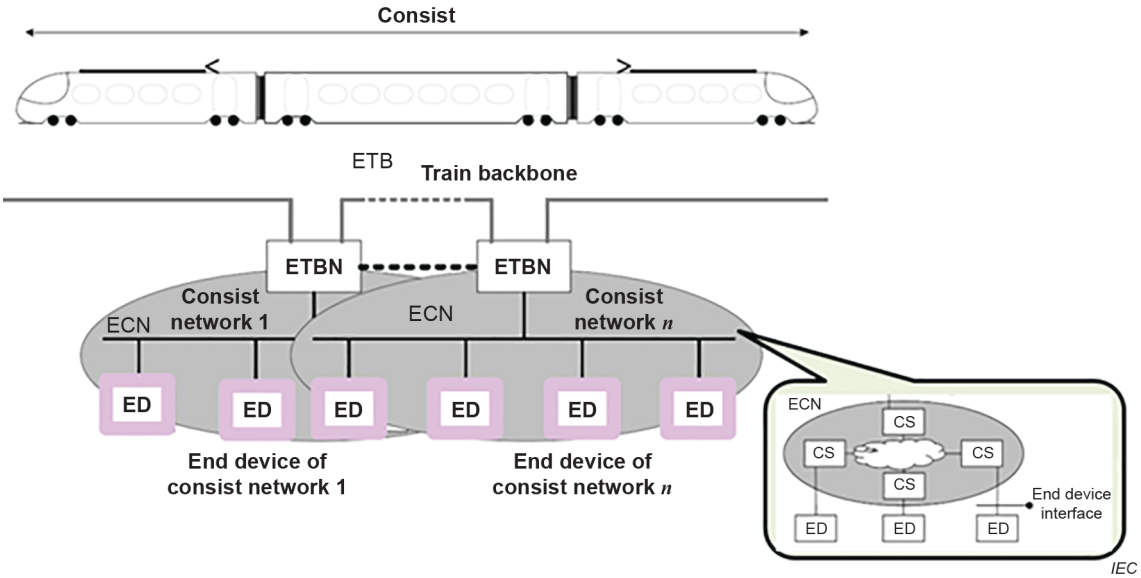

Figure 3 – Consist topology and logical view of ECN

6.4 PICS Pro-forma

6.4.1 General

The PICS provides a statement of the capabilities and options which have been implemented, and any features which have been omitted, see 4.1.3.1. Instructions about filling the PICS pro-forma are given in Annex B.

6.4.2 PICS Tables

6.4.2.1 PICS related to IEC 61375-2-3:2015

6.4.2.1.1 Common ETB Framework – Interoperability

Reference	Question	Subclause	Req.	Implementation
23ED_001	Follows a versioning scheme?	5.1.2	M	Yes [] No []

6.4.2.1.2 Common ETB Framework – Service Addressing

Reference	Question	Subclause	Req.	Implementation
23ED_002	Entities identified by TCN Domain Names	5.4.3	M	Yes [] No []
23ED_003	Sources/Destinations identified by TCN URI Identifier	5.4.4.3 5.4.4.6	M	Yes [] No []
23ED_004	– TCN URI User part	5.4.4.5	O	Yes [] No []
23ED_005	– Closed trains identification	5.4.4.6.5	O	Yes [] No []
23ED_006	IP routing in networks with multiple ETBs	5.4.5.5	M	Yes [] No []
23ED_007	Usage TRDP for data exchange	5.6.2	M	Yes [] No []
23ED_008	Service discovery	5.7	M	Yes [] No []

Documents
Document Sharing Hub
Full document details: BS EN IEC 61375-2-8:2021

6.4.2.1.3 TRDP (Train Real-Time Data Protocol)

Reference	Question	Subclause	Req.	Implementation
23ED_009	TRDP for the Exchange of TCN process data and TCN message data over ETB	Annex A	M	Yes [] No []

6.4.2.1.4 SDTv2 (Safe Data Transmission)

Reference	Question	Subclause	Req.	Implementation
23ED_010	SDTv2 supported	Annex B	C	Yes [] No []

6.4.2.2 PICS related to IEC 61375-2-5:2014

6.4.2.2.1 ETB physical layer

Reference	Question	Subclause	Req.	Implementation
25ED_001	PSE (Power Source Equipment) connected to a PD (Powered Device)	4.3	O	Yes [] No []

6.4.2.2.2 ETB network layer: IPv4 subnets definition – host on train subnet

Reference	Question	Subclause	Req.	Implementation
25ED_002	Particular hosts IP addresses on train subnet	6.5.2	M	Yes [] No []

6.4.2.2.3 ETB network layer: IPv4 subnets definition – host inside a closed train

Reference	Question	Subclause	Req.	Implementation
25ED_003	Particular hosts IP addresses inside a closed train	6.5.3	O	Yes [] No []

6.4.2.2.4 ETB transport layer

Reference	Question	Subclause	Req.	Implementation
25ED_004	ICMP Internet Control Message Protocol IETF RFC 792	7	M	Yes [] No []
25ED_005	IGMP v2 Internet Group Management Protocol IETF RFC 2236	7	M	Yes [] No []
25ED_006	UDP User Datagram Protocol IETF RFC 768	7	M	Yes [] No []
25ED_007	TCP Transmission Control Protocol IETF RFC 793	7	M	Yes [] No []

Documents
Document Sharing Hub
Full document details: BS EN IEC 61375-2-8:2021

6.4.2.2.5 ETB physical train naming convention

Reference	Question	Subclause	Req.	Implementation
25ED_008	Hosts identified by a FQDN (Full Qualified Domain Name)	10	O	Yes [] No []

6.4.2.2.6 ETB Application interface

Reference	Question	Subclause	Req.	Implementation
25ED_009	ETB Process Data and Message Data protocols	13.3	M	Yes [] No []

6.4.2.3 PICS related to IEC 61375-3-4:2014

6.4.2.3.1 Architecture (Network structure)

Reference	Question	Subclause	Req.	Implementation
34ED_001	Ethernet ports according to IEEE 802.3	4.2.1	M	Yes [] No []

6.4.2.3.2 Redundancy

Reference	Question	Subclause	Req.	Implementation
34ED_002	Redundancy managed at End Device level	4.5.4	O	Yes [] No []

6.4.2.3.3 IP address and related definitions – Consist Network address

Reference	Question	Subclause	Req.	Implementation
34ED_003	IP address(es) as Consist Network address(es)	4.7.1	M	Yes [] No []
34ED_004	Unique Consist Network address	4.7.1	M	Yes [] No []
34ED_005	IPv4 private address space defined in IETF RFC1918	4.7.1	M	Yes [] No []
34ED_006	Addresses follow this binary presentation: 00001010.0ddddddd.ddddddddd.ddddddd / 9 Field [d] is defined in IEC61375-3-4:2014, 4.7.1.	4.7.1	M	Yes [] No []

Documents
Document Sharing Hub
Full document details: BS EN IEC 61375-2-8:2021

6.4.2.3.4 IP address and related definitions – Train Network address

Reference	Question	Subclause	Req.	Implementation
34ED_007	IP address(es) as Train Network address(es)	4.7.2	M	Yes [] No []
34ED_008	IPv4 private address defined in IETF RFC 1918	4.7.2	M	Yes [] No []
34ED_009	Addresses follow the definitions in IEC 61375-2-5	4.7.2	M	Yes [] No []
34ED_010	Addresses follow this binary presentation: 00001010.1bbxssss.sshhhhhh.hhhhhhhh / 18 The fields are defined in IEC61375-3-4:2014, 4.7.2.	4.7.2	M	Yes [] No []

6.4.2.3.5 IP address and related definitions – Name resolution and naming definitions

Reference	Question	Subclause	Req.	Implementation
34ED_011	Destination devices of ETB addressable in train wide domain name space	4.7.4.1	M	Yes [] No []
34ED_012	127.0.0.1 “localhost” as self-addressing	4.7.4.2	M	Yes [] No []

6.4.2.3.6 IP address and network configuration management – Train network address management

Reference	Question	Subclause	Req.	Implementation
34ED_013	After a new inauguration, renewal of train network address	7.8.2	O	Yes [] No []
34ED_014	DHCP FORCERENEW message defined in IETF RFC 3203	7.8.2	O	Yes [] No []

Documents
Document Sharing Hub
Full document details: BS EN IEC 61375-2-8:2021

6.4.2.3.7 IP address and network configuration management – DHCP configuration parameters

Reference	Question	Subclause	Req.	Implementation
34ED_015	Subnet mask	4.8.4	M	Yes [] No []
34ED_016	Router option	4.8.4	M	Yes [] No []
34ED_017	Domain Name server option	4.8.4	C	Yes [] No []
34ED_018	Host Name option	4.8.4	O	Yes [] No []
34ED_019	Broadcast Address	4.8.4	O	Yes [] No []
34ED_020	Network time protocol server option	4.8.4	C	Yes [] No []
34ED_021	Vendor Specific Information	4.8.4	O	Yes [] No []
34ED_022	IP address lease time	4.8.4	M	Yes [] No []
34ED_023	DHCP message type	4.8.4	M	Yes [] No []
34ED_024	Server Identifier	4.8.4	M	Yes [] No []
34ED_025	Parameter request list	4.8.4	M	Yes [] No []
34ED_026	Message	4.8.4	O	Yes [] No []
34ED_027	Client-Identifier	4.8.4	O	Yes [] No []
34ED_028	Relay Agent Information option	4.8.4	O	Yes [] No []

6.4.2.3.8 Network Device interface – Physical Layer – Protocols

Reference	Question	Subclauses	Req.	Implementation
34ED_029	100BASE-TX	4.9.4.1.1	M	Yes [] No []
34ED_030	Full Duplex mode defined in IEEE 802.3	4.9.4.1.1	M	Yes [] No []
34ED_031	Auto negotiation function defined in IEEE 802.3	4.9.4.1.1	M	Yes [] No []

6.4.2.3.9 Network Device interface – Physical Layer – Cables

Reference	Question	Subclause	Req.	Implementation
	When 100BASE-TX or 10BASE-T is used:			
34ED_032	-M12 D-coded socket/plug	4.9.4.3.1	O	Yes [] No []
34ED_033	-IEC 61076-3-104 socket/plug	4.9.4.3.1	O	Yes [] No []
34ED_034	-RJ45 socket/plug defined in TIA/EIA-568-B	4.9.4.3.1	O	Yes [] No []
34ED_035	Pinning for M12 connector as shown in Table 11	4.9.4.3.1	M	Yes [] No []

Documents
Document Sharing Hub
Full document details: BS EN IEC 61375-2-8:2021

6.4.2.3.10 End Device interface (Table 12) – Physical Layer Protocols

Reference	Question	Subclause	Req.	Implementation
34ED_036	IEEE 802.3 supported	4.10.2.1	M	Yes [] No []
34ED_037	100BASE-TX	4.10.2.1	M	Yes [] No []
34ED_038	Full Duplex mode defined in IEEE 802.3	4.10.2.1	M	Yes [] No []
34ED_039	Auto negotiation function defined in IEEE 802.3	4.10.2.1	M	Yes [] No []

6.4.2.3.11 End Device interface – Physical Layer Cables

Reference	Question	Subclause	Req.	Implementation
34ED_040	ISO/IEC 11801 and IEC 61156-6	4.10.2.2	M	Yes [] No []
34ED_041	Class D (category 5e) with two twisted pairs	4.10.2.2	M	Yes [] No []

6.4.2.3.12 End Device interface – Physical Layer Connectors

Reference	Question	Subclause	Req.	Implementation
34ED_042	M12 D-coded socket/plug defined in IEC 61076-2-101	4.10.2.3	M	Yes [] No []
34ED_043	IEC 61076-3-104 socket/plug	4.10.2.3	O	Yes [] No []
34ED_044	RJ45 socket/plug defined in TIA/EIA-568-B	4.10.2.3	O	Yes [] No []
34ED_045	Pinning for M12 connector as shown in Table 11 and Figure 5	4.10.2.3	M	Yes [] No []

6.4.2.3.13 End Device interface – Link Layer

Reference	Question	Subclause	Req.	Implementation
34ED_046	MAC defined in IEEE 802.3	4.10.3	M	Yes [] No []
34ED_047	MAC with basic frame defined in IEE 802.3	4.10.3	M	Yes [] No []

6.4.2.3.14 End Device interface – Network Layer

Reference	Question	Subclause	Req.	Implementation
34ED_048	IP version4 defined in IETF RFC 791	4.10.4	M	Yes [] No []
34ED_049	ICMP defined in IETF RFC 792	4.10.4	M	Yes [] No []
34ED_050	ARP defined in IETF RFC 826	4.10.4	M	Yes [] No []

Documents
Document Sharing Hub
Full document details: BS EN IEC 61375-2-8:2021

6.4.2.3.15 End Device interface – Transport Layer

Reference	Question	Subclause	Req.	Implementation
34ED_051	UDP defined IETF RFC 768	4.10.5	M	Yes [] No []
34ED_052	TCP defined IETF RFC 793	4.10.5	M	Yes [] No []

6.4.2.3.16 End Device interface – Application Layer

Reference	Question	Subclause	Req.	Implementation
34ED_053	DHCP defined in IETF RFC 2131	4.10.6	M	Yes [] No []
34ED_054	DNS client function defined in IETF RFC 1034	4.10.6	M	Yes [] No []
34ED_055	SNTP client function defined in IETF RFC 1361 or NTP version 3 client function defined in IETF RFC 1305	4.10.6	O	Yes [] No []

6.4.2.3.17 Network management

Reference	Question	Subclause	Req.	Implementation
34ED_056	SNMP agent functions. (SNMPv2 defined in IETF RFC 1901, 1905 and 1906 is the minimum requirement.)	4.12.1	O	Yes [] No []

6.5 Testing framework

Figure 4 shows an example of the architecture of the testing framework and Table 5 describes each component:

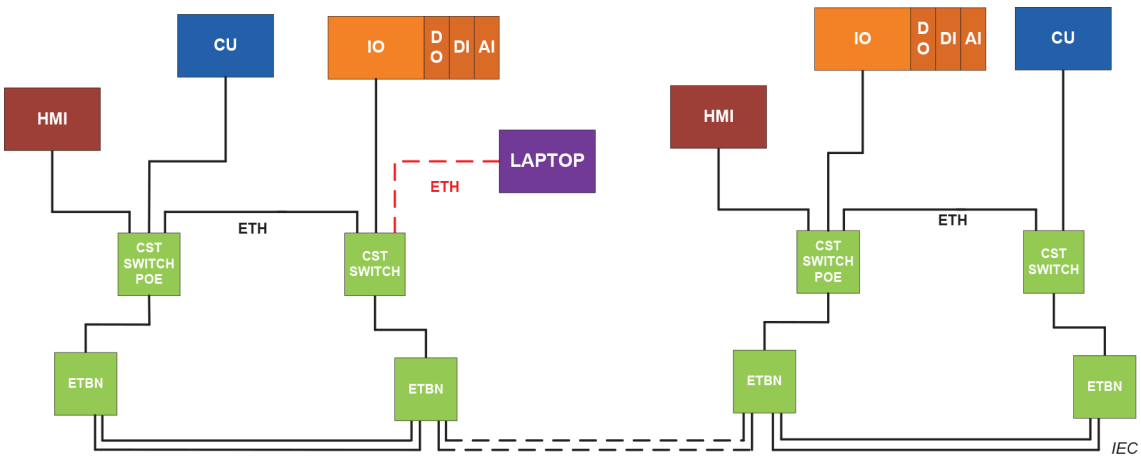

Figure 4 – Testing framework architecture

Documents
Document Sharing Hub
Full document details: BS EN IEC 61375-2-8:2021