BS EN IEC 61784-5-3:2018

BSI Standards Publication

Industrial communication networks - Profiles

Part 5-3: Installation of fieldbuses - Installation profiles for CPF 3

Documents
Document Sharing Hub

Full document details: BS EN IEC 61784-5-3:2018

National foreword

This British Standard is the UK implementation of EN IEC 61784-5-3:2018. It is identical to IEC 61784-5-3:2018. It supersedes BS EN 61784-5-3:2013, which will be withdrawn on 4 October 2021.

The UK participation in its preparation was entrusted to Technical Committee GEL/65, Measurement and control.

A list of organizations represented on this committee can be obtained on request to its secretary.

This publication does not purport to include all the necessary provisions of a contract. Users are responsible for its correct application.

© The British Standards Institution 2018
Published by BSI Standards Limited 2018

ISBN 978 0 580 97315 4

ICS 35.100.40; 25.040.40

Compliance with a British Standard cannot confer immunity from legal obligations.

This British Standard was published under the authority of the Standards Policy and Strategy Committee on 30 November 2018.

Amendments/corrigenda issued since publication

Date	Text affected

Documents
Document Sharing Hub

Full document details: BS EN IEC 61784-5-3:2018

EUROPEAN STANDARD

NORME EUROPÉENNE

EUROPÄISCHE NORM

EN IEC 61784-5-3

November 2018

ICS 25.040.40; 35.100.40

English Version

Industrial communication networks - Profiles - Part 5-3: Installation of fieldbuses - Installation profiles for CPF 3 (IEC 61784-5-3:2018)

Réseaux de communication industriels - Profils - Partie 5-3: Installation des bus de terrain - Profils d'installation pour CPF 3 (IEC 61784-5-3:2018)

Industrielle Kommunikationsnetze - Profile - Teil 5-3: Feldbusinstallation - Installationsprofile für die Kommunikationsprofilfamilie 3 (IEC 61784-5-3:2018)

This European Standard was approved by CENELEC on 2018-10-04. CENELEC members are bound to comply with the CEN/CENELEC Internal Regulations which stipulate the conditions for giving this European Standard the status of a national standard without any alteration.

Up-to-date lists and bibliographical references concerning such national standards may be obtained on application to the CEN-CENELEC Management Centre or to any CENELEC member.

This European Standard exists in three official versions (English, French, German). A version in any other language made by translation under the responsibility of a CENELEC member into its own language and notified to the CEN-CENELEC Management Centre has the same status as the official versions.

CENELEC members are the national electrotechnical committees of Austria, Belgium, Bulgaria, Croatia, Cyprus, the Czech Republic, Denmark, Estonia, Finland, Former Yugoslav Republic of Macedonia, France, Germany, Greece, Hungary, Iceland, Ireland, Italy, Latvia, Lithuania, Luxembourg, Malta, the Netherlands, Norway, Poland, Portugal, Romania, Serbia, Slovakia, Slovenia, Spain, Sweden, Switzerland, Turkey and the United Kingdom.

European Committee for Electrotechnical Standardization
Comité Européen de Normalisation Electrotechnique
Europäisches Komitee für Elektrotechnische Normung

CEN-CENELEC Management Centre: Rue de la Science 23, B-1040 Brussels

© 2018 CENELEC All rights of exploitation in any form and by any means reserved worldwide for CENELEC Members.

Ref. No. EN IEC 61784-5-3:2018 E

AVA Documents Document Sharing Hub

Full document details: BS EN IEC 61784-5-3:2018

European foreword

The text of document 65C/924/FDIS, future edition 4 of IEC 61784-5-3, prepared by SC 65C "Industrial networks" of IEC/TC 65 "Industrial-process measurement, control and automation" was submitted to the IEC-CENELEC parallel vote and approved by CENELEC as EN IEC 61784-5-3:2018.

The following dates are fixed:

- latest date by which the document has to be implemented at national level by publication of an identical national standard or by endorsement (dop) 2019-07-04
- latest date by which the national standards conflicting with the document have to be withdrawn (dow) 2021-10-04

Attention is drawn to the possibility that some of the elements of this document may be the subject of patent rights. CENELEC shall not be held responsible for identifying any or all such patent rights.

Endorsement notice

The text of the International Standard IEC 61784-5-3:2018 was approved by CENELEC as a European Standard without any modification.

Documents
Document Sharing Hub

Full document details: BS EN IEC 61784-5-3:2018

Annex ZA
(normative)

Normative references to international publications with their corresponding European publications

The following documents are referred to in the text in such a way that some or all of their content constitutes requirements of this document. For dated references, only the edition cited applies. For undated references, the latest edition of the referenced document (including any amendments) applies.

NOTE 1 Where an International Publication has been modified by common modifications, indicated by (mod), the relevant EN/HD applies.

NOTE 2 Up-to-date information on the latest versions of the European Standards listed in this annex is available here: www.cenelec.eu.

Publication	Year	Title	EN/HD	Year
IEC 61918	2018	Industrial communication networks - Installation of communication networks in industrial premises	EN IEC 61918	2018

Documents
Document Sharing Hub
Full document details: BS EN IEC 61784-5-3:2018

This page deliberately left blank

Documents
Document Sharing Hub

Full document details: BS EN IEC 61784-5-3:2018

CONTENTS

FOREWORD 7
INTRODUCTION 9
1 Scope 10
2 Normative references 10
3 Terms, definitions and abbreviated terms 10
4 CPF 3: Overview of installation profiles 10
5 Installation profile conventions 11
6 Conformance to installation profiles 11
Annex A (normative) CP 3/1 (PROFIBUS) specific installation profile 13
A.1 Installation profile scope 13
A.2 Normative references 13
A.3 Installation profile terms, definitions, and abbreviated terms 13
A.3.1 Terms and definitions 13
A.3.2 Abbreviated terms 14
A.3.3 Conventions for installation profiles 14
A.4 Installation planning 14
A.4.1 General 14
A.4.2 Planning requirements 14
A.4.3 Network capabilities 16
A.4.4 Selection and use of cabling components 18
A.4.5 Cabling planning documentation 28
A.4.6 Verification of cabling planning specification 28
A.5 Installation implementation 28
A.5.1 General requirements 28
A.5.2 Cable installation 28
A.5.3 Connector installation 30
A.5.4 Terminator installation 34
A.5.5 Device installation 34
A.5.6 Coding and labelling 34
A.5.7 Earthing and bonding of equipment and device and shielded cabling 35
A.5.8 As-implemented cabling documentation 36
A.6 Installation verification and installation acceptance test 36
A.6.1 General 36
A.6.2 Installation verification 36
A.6.3 Installation acceptance test 38
A.7 Installation administration 43
A.8 Installation maintenance and installation troubleshooting 43
Annex B (normative) CP 3/2 (PROFIBUS) specific installation profile 44
B.1 Installation profile scope 44
B.2 Normative references 44
B.3 Installation profile terms, definitions, and abbreviated terms 44
B.3.1 Terms and definitions 44
B.3.2 Abbreviated terms 45
B.3.3 Conventions for installation profiles 45

AVA Documents
Document Sharing Hub

B.4 Installation planning ... 46
B.4.1 General ... 46
B.4.2 Planning requirements ... 47
B.4.3 Network capabilities ... 54
B.4.4 Selection and use of cabling components ... 60
B.4.5 Cabling planning documentation ... 75
B.4.6 Verification of cabling planning specification ... 75
B.5 Installation implementation ... 75
B.5.1 General requirements ... 75
B.5.2 Cable installation ... 75
B.5.3 Connector installation ... 76
B.5.4 Terminator installation ... 77
B.5.5 Device installation ... 77
B.5.6 Coding and labelling ... 77
B.5.7 Earthing and bonding of equipment and device and shielded cabling ... 77
B.5.8 As-implemented cabling documentation ... 77
B.6 Installation verification and installation acceptance test ... 77
B.6.1 General ... 77
B.6.2 Installation verification ... 78
B.6.3 Installation acceptance test ... 78
B.7 Installation administration ... 79
B.8 Installation maintenance and installation troubleshooting ... 79
Annex C (normative) CP 3/3, CP 3/4, CP 3/5, CP 3/6 (PROFINET) specific installation profile ... 80
C.1 Installation profile scope ... 80
C.2 Normative references ... 80
C.3 Installation profile terms, definitions, and abbreviated terms ... 80
C.3.1 Terms and definitions ... 80
C.3.2 Abbreviated terms ... 80
C.3.3 Conventions for installation profiles ... 80
C.4 Installation planning ... 81
C.4.1 General ... 81
C.4.2 Planning requirements ... 81
C.4.3 Network capabilities ... 81
C.4.4 Selection and use of cabling components ... 84
C.4.5 Cabling planning documentation ... 106
C.4.6 Verification of cabling planning specification ... 106
C.5 Installation implementation ... 106
C.5.1 General requirements ... 106
C.5.2 Cable installation ... 106
C.5.3 Connector installation ... 108
C.5.4 Terminator installation ... 110
C.5.5 Device installation ... 110
C.5.6 Coding and labelling ... 110
C.5.7 Earthing and bonding of equipment and device and shielded cabling ... 111
C.5.8 As-implemented cabling documentation ... 112
C.6 Installation verification and installation acceptance test ... 112
C.6.1 General ... 112

AVA Documents
Document Sharing Hub

C.6.2 Installation verification ... 112
C.6.3 Installation acceptance test ... 113
C.7 Installation administration ... 114
C.8 Installation maintenance and installation troubleshooting ... 114
Bibliography ... 115

Figure 1 – Standards relationships ... 9
Figure A.1 – Recommended combination of shielding and earthing for CP 3/1 networks with RS 485-IS ... 26
Figure A.2 – Sub-D connector pin numberings (front view) ... 31
Figure A.3 – 5-pin M12 female socket ... 32
Figure A.4 – 5-pin M12 male plug for CP 3/1 ... 33
Figure A.5 – Test circuit A – Resistance measurement of data line B and shield ... 39
Figure A.6 – Test circuit B – Resistance measurement of data line A and shield ... 39
Figure A.7 – Test circuit C – Resistance measurement of data line A, data line B, and shield ... 39
Figure A.8 – Test circuit D – Resistance measurement between data line A and B ... 40
Figure A.9 – Resistance measurement without 9-pin Sub-D plug ... 40
Figure A.10 – Loop core resistance (cable type A) ... 41
Figure A.11 – Action and resolution tree for measurement 1 (RS 485 and RS 485-IS) ... 41
Figure A.12 – Action and resolution tree for measurement 2 (RS 485 and RS 485-IS) ... 42
Figure A.13 – Action and resolution tree for measurement 3 (RS 485 and RS 485-IS) ... 42
Figure B.1 – Connection of CP 3/1 networks ... 47
Figure B.2 – Typical fieldbus architecture ... 50
Figure B.3 – Fieldbus with stations supplied by auxiliary power sources ... 50
Figure B.4 – Fieldbus model ... 53
Figure B.5 – Current modulation (Manchester II code) ... 53
Figure B.6 – Tree topology ... 55
Figure B.7 – Bus topology ... 55
Figure B.8 – Combination of the tree topology and the bus topology ... 56
Figure B.9 – Fieldbus extension ... 56
Figure B.10 – Recommended combination of shielding and earthing ... 70
Figure B.11 – Ideal combination of shielding and earthing ... 71
Figure B.12 – Capacitive earthing ... 72
Figure B.13 – Galvanic isolated field device ... 73
Figure B.14 – Pin assignment of the male and female connectors IEC 60947-5-2 (A-coding) ... 77
Figure C.1 – Definition of End-to-end link ... 101
Figure C.2 – End-to-end link without interconnections ... 101
Figure C.3 – Assembled End-to-end link ... 101
Figure C.4 – Connectionless optical fibre link ... 102
Figure C.5 – Assembled optical fibre link ... 102
Figure C.6 – Shielded connectors for CP 3/3, CP 3/4, CP 3/5 and CP 3/6 fieldbus networks ... 108
Figure C.7 – Pin-assignment for a straight cable ... 109

AVA Documents
Document Sharing Hub

Full document details: BS EN IEC 61784-5-3:2018

Table A.1 – Excerpt of MICE definition 16
Table A.2 – Basic network characteristics for balanced cabling not based on Ethernet (ISO/IEC 8802-3) 17
Table A.3 – Network characteristics for optical fibre cabling 18
Table A.4 – Information relevant to copper cable: fixed cables 19
Table A.5 – Information relevant to optical fibre cables 20
Table A.6 – Connectors for copper cabling CPs not based on Ethernet 21
Table A.7 – Optical fibre connecting hardware 21
Table A.8 – Relationship between FOC and fibre types (CP 3/1) 21
Table A.9 – Parameters for balanced cables 29
Table A.10 – Parameters for silica optical fibre cables 29
Table A.11 – Parameters for POF optical fibre cables 29
Table A.12 – Parameters for hard clad silica optical fibre cables 30
Table A.13 – Use of 9 pin Sub-D connector pins (RS 485) 31
Table A.14 – Use of 9 pin Sub-D connector pins (RS 485-IS) 32
Table A.15 – Use of M12 connector pins (RS 485) 33
Table A.16 – Use of M12 connector pins (RS 485-IS) 34
Table A.17 – Maximum fibre channel attenuation for CP 3/1 (PROFIBUS) 43
Table B.1 – Valid parameter range of the FISCO model for use as EEx ib IIC / IIB 51
Table B.2 – Valid parameter range of the FISCO model for use as EEx ia IIC 52
Table B.3 – Power supply (operational values) 58
Table B.4 – Line lengths which can be achieved 58
Table B.5 – Limit values for distortion, reflection and signal delay 59
Table B.6 – Recommended maximum cable lengths including spurs 59
Table B.7 – Recommended length of the spurs 60
Table B.8 – Maximum length of the splices 60
Table B.9 – Information relevant to copper cable: fixed cables 61
Table B.10 – Safety limit values for the fieldbus cable 62
Table B.11 – Connectors for copper cabling CPs not based on Ethernet 63
Table B.12 – Mixing devices from different categories 65
Table B.13 – Electrical characteristics of fieldbus interfaces 66
Table B.14 – Recommended data sheet specifications for CP 3/2 devices 67
Table B.15 – Parameters for balanced cables 75
Table B.16 – Contact assignments for the external connector for harsh industrial environments 76
Table C.1 – General transmission media selection information 82
Table C.2 – Network characteristics for balanced cabling based on Ethernet (ISO/IEC 8802-3) 83
Table C.3 – Network characteristics for optical fibre cabling 83
Table C.4 – Information relevant to copper cable: CP 3/3, CP 3/4, CP 3/5 and CP 3/6 type A fixed cables 85
Table C.5 – Information relevant to copper cable: CP 3/3, CP 3/4, CP 3/5 and CP 3/6 type B flexible cables 86

AVA Documents
Document Sharing Hub
Full document details: BS EN IEC 61784-5-3:2018

Table C.6 – Information relevant to copper cable: CP 3/3, CP 3/4, CP 3/5 and CP 3/6 type C special cables 87
Table C.7 – Information relevant to copper cable: CP 3/3, CP 3/4, CP 3/5 and CP 3/6 of cabinet cord sets 88
Table C.8 – Requirement data cable inside and outside cabinet: CP 3/3, CP 3/4, CP 3/5 and CP 3/6 type B flexible cables 89
Table C.9 – Requirement to copper cable inside and outside cabinet: CP 3/3, CP 3/4, CP 3/5 and CP 3/6 type B flexible cables 90
Table C.10 – Information relevant to optical fibre cables 91
Table C.11 – Requirements for plastic and hard clad silica optical fibre cables 91
Table C.12 – Requirements for glass multimode optical fibre cables 93
Table C.13 – Requirements for glass singlemode optical fibre cables 94
Table C.14 – Requirements of industrial FO-cord sets 95
Table C.15 – Standard of test of industrial FO-cord sets 96
Table C.16 – Information relevant to hybrid cables (application type B) 96
Table C.17 – Information relevant to hybrid cables (application type C) 97
Table C.18 – Connectors for balanced cabling CPs based on Ethernet 99
Table C.19 – Connectors for balanced cabling CPs not based on Ethernet 99
Table C.20 – Connectors for balanced cabling CPs based on Ethernet 99
Table C.21 – Optical fibre connecting hardware 100
Table C.22 – Relationship between FOC and fibre types (CP 3/3, CP 3/4, CP 3/5, CP3/6) 100
Table C.23 – Typical fibre channels common for industrial applications. 103
Table C.24 – Parameters for balanced cables 107
Table C.25 – Parameters for silica optical fibre cables 107
Table C.26 – Parameters for POF optical fibre cables 107
Table C.27 – Parameters for hard clad silica optical fibre cables 108
Table C.28 – Colour coding of 2 pair cabling for CP 3/3, CP 3/4, CP 3/5 and CP 3/6 connectors 109
Table C.29 – Colour coding of 4 pair cabling for CP 3/3, CP 3/4, CP 3/5 and CP 3/6 connectors 109
Table C.30 – Contact arrangement M12 2 pair to M12 4 pair for CP 3/3, CP 3/4, CP 3/5 and CP 3/6 connectors 110
Table C.31 – Maximum fibre channel attenuation for CP 3/3, CP 3/4, CP 3/5 and CP 3/6 (PROFINET) 114

Documents
Document Sharing Hub
Full document details: BS EN IEC 61784-5-3:2018

INTERNATIONAL ELECTROTECHNICAL COMMISSION

INDUSTRIAL COMMUNICATION NETWORKS – PROFILES –

Part 5-3: Installation of fieldbuses – Installation profiles for CPF 3

FOREWORD

1) The International Electrotechnical Commission (IEC) is a worldwide organization for standardization comprising all national electrotechnical committees (IEC National Committees). The object of IEC is to promote international co-operation on all questions concerning standardization in the electrical and electronic fields. To this end and in addition to other activities, IEC publishes International Standards, Technical Specifications, Technical Reports, Publicly Available Specifications (PAS) and Guides (hereafter referred to as "IEC Publication(s)"). Their preparation is entrusted to technical committees; any IEC National Committee interested in the subject dealt with may participate in this preparatory work. International, governmental and non-governmental organizations liaising with the IEC also participate in this preparation. IEC collaborates closely with the International Organization for Standardization (ISO) in accordance with conditions determined by agreement between the two organizations.
2) The formal decisions or agreements of IEC on technical matters express, as nearly as possible, an international consensus of opinion on the relevant subjects since each technical committee has representation from all interested IEC National Committees.
3) IEC Publications have the form of recommendations for international use and are accepted by IEC National Committees in that sense. While all reasonable efforts are made to ensure that the technical content of IEC Publications is accurate, IEC cannot be held responsible for the way in which they are used or for any misinterpretation by any end user.
4) In order to promote international uniformity, IEC National Committees undertake to apply IEC Publications transparently to the maximum extent possible in their national and regional publications. Any divergence between any IEC Publication and the corresponding national or regional publication shall be clearly indicated in the latter.
5) IEC itself does not provide any attestation of conformity. Independent certification bodies provide conformity assessment services and, in some areas, access to IEC marks of conformity. IEC is not responsible for any services carried out by independent certification bodies.
6) All users should ensure that they have the latest edition of this publication.
7) No liability shall attach to IEC or its directors, employees, servants or agents including individual experts and members of its technical committees and IEC National Committees for any personal injury, property damage or other damage of any nature whatsoever, whether direct or indirect, or for costs (including legal fees) and expenses arising out of the publication, use of, or reliance upon, this IEC Publication or any other IEC Publications.
8) Attention is drawn to the Normative references cited in this publication. Use of the referenced publications is indispensable for the correct application of this publication.
9) Attention is drawn to the possibility that some of the elements of this IEC Publication may be the subject of patent rights. IEC shall not be held responsible for identifying any or all such patent rights.

International Standard IEC 61784-5-3 has been prepared by subcommittee 65C: Industrial networks, of IEC technical committee 65: Industrial-process measurement, control and automation.

This fourth edition cancels and replaces the third edition published in 2013. This edition constitutes a technical revision.

This edition includes the following significant technical changes with respect to the previous edition:

a) an addition of 4-pair cabling (see C.4.4.1.2.1and C.5.3.2);
b) an addition of the connector M12 X-Coding (see C.4.4.2.2);
c) an addition of the definition of End-to-end links (see C.4.4.3.1);

Documents
Document Sharing Hub

d) a revision of Table C.17 (see C.5.2.1);

e) a formula for the NEXT limits of End-to-end links (see C.6.3.2.1.2).

This standard is to be used in conjunction with IEC 61918:2018

The text of this international standard is based on the following documents:

FDIS	Report on voting
65C/924/FDIS	65C/925/RVD

Full information on the voting for the approval of this international standard can be found in the report on voting indicated in the above table.

This document has been drafted in accordance with the ISO/IEC Directives, Part 2.

A list of all parts of IEC 61784-5 series, under the general title *Industrial communication networks – Profiles – Installation of fieldbuses*, can be found on the IEC website.

The committee has decided that the contents of this document will remain unchanged until the stability date indicated on the IEC web site under "http://webstore.iec.ch" in the data related to the specific document. At this date, the document will be

- reconfirmed,
- withdrawn,
- replaced by a revised edition, or
- amended.

A bilingual version of this publication may be issued at a later date.

IMPORTANT – The 'colour inside' logo on the cover page of this publication indicates that it contains colours which are considered to be useful for the correct understanding of its contents. Users should therefore print this document using a colour printer.

Documents
Document Sharing Hub

Full document details: BS EN IEC 61784-5-3:2018

INTRODUCTION

This International Standard is one of a series produced to facilitate the use of communication networks in industrial control systems.

IEC 61918:2018 provides the common requirements for the installation of communication networks in industrial control systems. This installation profile standard provides the installation profiles of the communication profiles (CP) of a specific communication profile family (CPF) by stating which requirements of IEC 61918 fully apply and, where necessary, by supplementing, modifying, or replacing the other requirements (see Figure 1).

For general background on fieldbuses, their profiles, and relationship between the installation profiles specified in this document, see IEC 61158-1.

Each CP installation profile is specified in a separate annex of this document. Each annex is structured exactly as the reference standard IEC 61918 for the benefit of the persons representing the roles in the fieldbus installation process as defined in IEC 61918 (planner, installer, verification personnel, validation personnel, maintenance personnel, administration personnel). By reading the installation profile in conjunction with IEC 61918, these persons immediately know which requirements are common for the installation of all CPs and which are modified or replaced. The conventions used to draft this document are defined in Clause 5.

The provision of the installation profiles in one standard for each CPF (for example IEC 61784-5-3 for CPF 3), allows readers to work with standards of a convenient size.

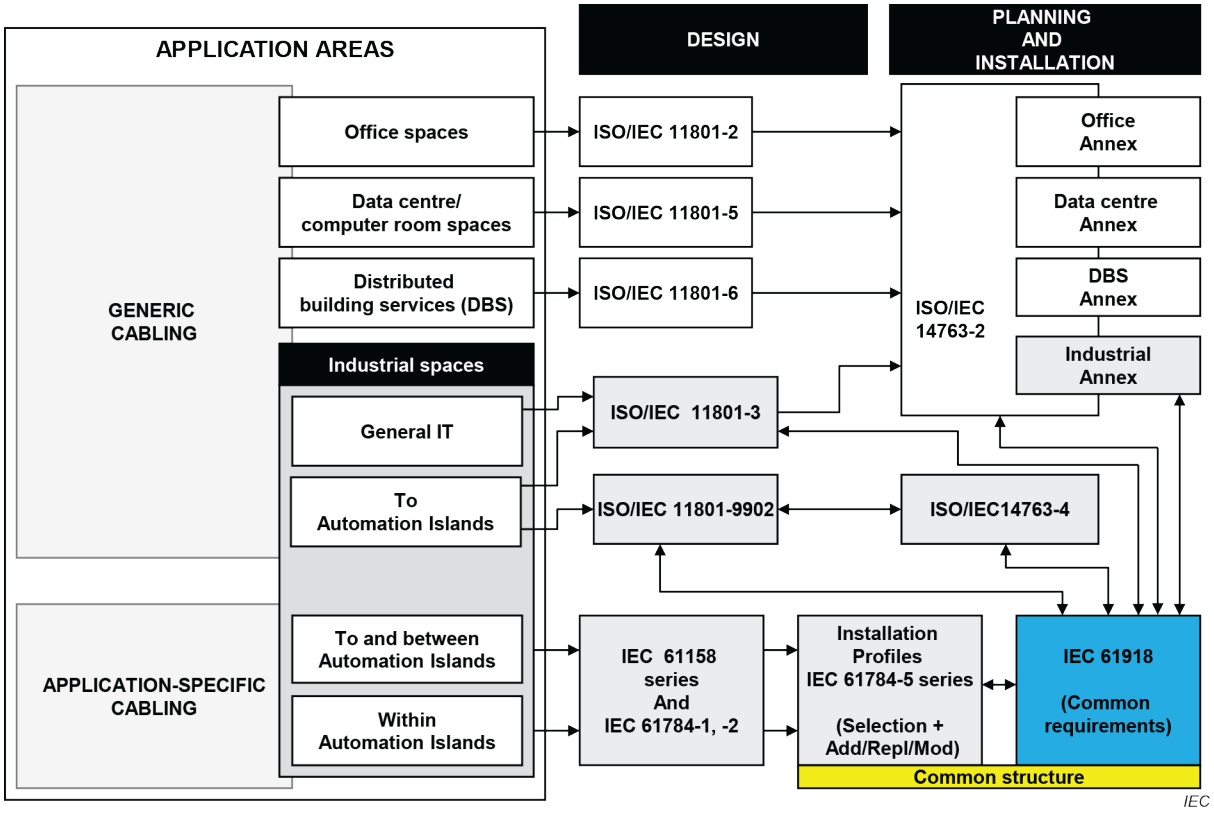

Figure 1 – Standards relationships

Documents
Document Sharing Hub
Full document details: BS EN IEC 61784-5-3:2018

INDUSTRIAL COMMUNICATION NETWORKS – PROFILES –

Part 5-3: Installation of fieldbuses – Installation profiles for CPF 3

1 Scope

This part of IEC 61784-5 specifies the installation profiles for CPF 3 (PROFIBUS/PROFINET)[1].

The installation profiles are specified in the annexes. These annexes are read in conjunction with IEC 61918:2018.

2 Normative references

The following documents, in whole or in part, are normatively referenced in this document and are indispensable for its application. For dated references, only the edition cited applies. For undated references, the latest edition of the referenced document (including any amendments) applies.

IEC 61918:2018, *Industrial communication networks – Installation of communication networks in industrial premises*

The normative references of IEC 61918:2018, Clause 2, apply.

NOTE For profile specific normative references, see Clause(s) A.2, B.2 and C.2.

3 Terms, definitions and abbreviated terms

For the purposes of this document, the terms, definitions and abbreviated terms of IEC 61918:2018, Clause 3, apply.

ISO and IEC maintain terminological databases for use in standardization at the following addresses:

- IEC Electropedia: available at http://www.electropedia.org/
- ISO Online browsing platform: available at http://www.iso.org/obp

NOTE For profile specific terms, definitions and abbreviated terms see Clause(s) A.3, B.3 and C.3.

4 CPF 3: Overview of installation profiles

CPF 3 consists of six communication profiles as specified in IEC 61784-1 and IEC 61784-2.

---

[1] PROFIBUS and PROFINET are trade names of the non-profit organization PROFIBUS Nutzerorganisation e.V. (PNO). This information is given for the convenience of users of this document and does not constitute an endorsement by IEC of the trade names holder or any of its products. Compliance to this profile does not require use of the trade names. Use of the trade names PROFIBUS and PROFINET requires permission of the trade name holder.

Documents
Document Sharing Hub

Full document details: BS EN IEC 61784-5-3:2018

The installation requirements for CP 3/1 (PROFIBUS with physical layer according to RS 485, RS 485-IS, and fibre) are specified in Annex A.

The installation requirements for CP 3/2 (PROFIBUS with physical layer according to MBP, MBP-IS, MBP-LP) are specified in Annex B.

The installation requirements for CP 3/3, CP 3/4, CP 3/5, and CP 3/6 (PROFINET) are specified in Annex C.

5 Installation profile conventions

The numbering of the clauses and subclauses in the annexes of this document corresponds to the numbering of IEC 61918 main clauses and subclauses.

The annex clauses and subclauses of this document supplement, modify, or replace the respective clauses and subclauses in IEC 61918.

Where there is no corresponding subclause of IEC 61918 in the normative annexes in this document, the subclause of IEC 61918 applies without modification.

The annex heading letter represents the installation profile assigned in Clause 4. The annex (sub)clause numbering following the annex letter shall represent the corresponding (sub)clause numbering of IEC 61918.

EXAMPLE "Subclause B.4.4" in IEC 61784-5-3 means that CP 3/2 specifies the subclause 4.4 of IEC 61918.

All main clauses of IEC 61918 are cited and apply in full unless otherwise stated in each normative installation profile annex.

If all subclauses of a (sub)clause are omitted, then the corresponding IEC 61918 (sub)clause applies.

If in a (sub)clause it is written "Not applicable.", then the corresponding IEC 61918 (sub)clause does not apply.

If in a (sub)clause it is written "*Addition:*", then the corresponding IEC 61918 (sub)clause applies with the additions written in the profile.

If in a (sub)clause it is written "*Replacement:*", then the text provided in the profile replaces the text of the corresponding IEC 61918 (sub)clause.

NOTE A replacement can also comprise additions.

If in a (sub)clause it is written "*Modification:*", then the corresponding IEC 61918 (sub)clause applies with the modifications written in the profile.

If all (sub)clauses of a (sub)clause are omitted but in this (sub)clause it is written *"(Sub)clause x has addition*" (or "*replacement*", or "*modification*") or *"*(Sub)clause is not applicable.", then (sub)clause x becomes valid as declared and all the other corresponding IEC 61918 (sub)clauses apply.

6 Conformance to installation profiles

Each installation profile within this document includes part of IEC 61918:2018. It may also include defined additional specifications.

AVA Documents
Document Sharing Hub

Full document details: BS EN IEC 61784-5-3:2018

A statement of compliance to an installation profile of this document shall be stated[2] as either

Compliance to IEC 61784-5-3:201x[3] for CP 3/m <name> or

Compliance to IEC 61784-5-3 (Ed.4.0) for CP 3/m <name>

where the name within the angle brackets < > is optional and the angle brackets are not to be included. The m within CP 3/m shall be replaced by the profile number 1 to 6.

NOTE The name may be the name of the profile, for example PROFIBUS or PROFINET.

If the name is a trade name then the permission of the trade name holder shall be required.

Product standards shall not include any conformity assessment aspects (including quality management provisions), neither normative nor informative, other than provisions for product testing (evaluation and examination).

[2] In accordance with ISO/IEC Directives.

[3] The date should not be used when the edition number is used.

Documents
Document Sharing Hub

Full document details: BS EN IEC 61784-5-3:2018

Annex A
(normative)

CP 3/1 (PROFIBUS) specific installation profile

A.1 Installation profile scope

Addition:

This annex specifies the installation profile for Communication Profile CP 3/1 (PROFIBUS with a physical layer according to RS 485, RS 485-IS, and fibre). The CP 3/1 is specified in IEC 61784-1.

A.2 Normative references

Addition:

IEC 60079-14, *Explosive atmospheres – Part 14: Electrical installations design, selection and erection*

IEC 60079-11:2011, *Explosive atmospheres – Part 11: Equipment protection by intrinsic safety "i"*

IEC 60512-6-3, *Connectors for electronic equipment – Tests and measurements – Part 6-3: Dynamic stress tests – Test 6c: Shock*

IEC 60512-6-4, *Connectors for electronic equipment – Tests and measurements – Part 6-4: Dynamic stress tests – Test 6d: Vibration (sinusoidal)*

IEC 61508 (all parts), *Functional safety of electrical/electronic/programmable electronic safety-related systems*

ANSI TIA/EIA-485-A, *Electrical Characteristics of Generators and Receivers for Use in Balanced Digital Multipoint Systems*

A.3 Installation profile terms, definitions, and abbreviated terms

A.3.1 Terms and definitions

Addition:

A.3.1.87
hazard
potential source of harm

Note 1 to entry: The term includes danger to persons arising within a short time scale (for example fire and explosion) and also those that have a long term effect on a person's health (for example release of a toxic substance).

[SOURCE: IEC 61508-4:2010, 3.1.2, modified – the note to entry has been added]

Documents
Document Sharing Hub

Full document details: BS EN IEC 61784-5-3:2018

A.3.1.88
intrinsic safety "i"
type of protection based on the restriction of electrical energy within apparatus and of interconnecting wiring exposed to the potentially explosive atmosphere to a level below that which can cause ignition by either sparking or heating effects

Note 1 to entry: No single device or wiring is intrinsically safe by itself (except for battery-operated self-contained apparatus such as portable pagers, transceivers, gas detectors, which are specifically designed as intrinsically safe self-contained devices) but is intrinsically safe only when employed as part of a properly designed intrinsically safe system.

[SOURCE: IEC 60079-11:2011, 3.1.1, modified – the note to entry has been added]

A.3.2 Abbreviated terms

Addition:

MAU	Medium attachment unit
PELV	Protective extra low voltage
PNO	PROFIBUS Nutzer Organisation (a non-profit user organisation)
RS 485	MAU according to ANSI TIA/EIA-485-A
RS 485-IS	MAU according to ANSI TIA/EIA-485-A and applicable to IS
SELV	Safety extra low voltage
TN-S	Coded type of system earthing according to IEC 60364-1, 312.2

A.3.3 Conventions for installation profiles

Not applicable.

A.4 Installation planning

A.4.1 General

Subclause 4.1.2 has addition:

Generic cabling in accordance with ISO/IEC 11801-3 is not suitable for the cabling of CP 3/1 networks.

CP 3/1 networks only can be connected to the generic cabling via a converter/adapter as specified in IEC 61918:2018, 4.1.2.

A.4.2 Planning requirements

A.4.2.1 Safety

Subclause 4.2.1.3 has addition:

Each and every device on CP 3/1 networks (standard and safety) should provide a test certificate issued by PROFIBUS International (more information available by <www.profibus.com>) based on IEC 61158 or at least provide a corresponding manufacturers declaration stating compliance with CP 3/1 specification.

Each and every safety device shall comply with IEC 61508 series and other related standards if applicable.

Documents
Document Sharing Hub

Full document details: BS EN IEC 61784-5-3:2018

The 24 V power supplies in use shall be one-error proof and provide SELV/PELV only. National regulations shall be considered.

EXAMPLE In the United States of America, the power supplies provide a current limitation of 8 A according to UL508C.

No spurs or branch lines are permitted in a CP 3/1 network for safety applications.

Effective cable shielding especially after bending the cable or after changing connectors shall be ensured. In case of doubt, a more flexible and robust cable type should be used.

Sub-D connectors shall have multi contact features at the connector housing in order to provide an optimal contact between the cable shield, the cable connector and its counterpart at the CP 3/1 device. Care shall be taken to achieve a good (low impedance) contact between the cable shield and connector housing.

For connections of CP 3/1 devices with M12 interface only M12 connectors that guarantee a good (low impedance) contact between cable shield and connector housing are permitted. Cable shield shall not be connected to the connector pin 5.

A cabinet of protection class IP54 (dust, shower water) shall be used for safety devices such as drives with integrated safety that are offering a lower protection class such as IP20. Cabinets with a lower protection class may only be used if safety devices explicitly permit other environments according to the manufacturer's information (for example heat problems).

A.4.2.2 Security

A.4.2.3 Environmental considerations and EMC

A.4.2.3.1 Description methodology

Modification:

The MICE description methodology shown in IEC 61918:2018 is both a rather comprehensive and complex approach but nevertheless does not describe all possible environments. Where an environment exists that cannot be mapped in to the MICE tables, the user shall determine suitability of the components for the targeted environment through agreements with the component providers or additional mitigation techniques.

To make fieldbus installation work more easily for CP 3/1 fieldbus networks the MICE table is condensed into the two basic environments inside and outside data cabinets.

CP 3/1 products should at least meet the MICE parameters of Table A.1.

Documents
Document Sharing Hub

Full document details: BS EN IEC 61784-5-3:2018

Table A.1 – Excerpt of MICE definition

	Inside enclosure	Outside enclosure
Mechanical		
Shock/bump Peak acceleration	IEC 60512-6-3 20 g / 11 ms 3 per axis in both directions	IEC 60512-6-3 20 g / 11 ms 3 per axis in both directions
Vibration 10 Hz – 500 Hz	IEC 60512-6-4 0,35 mm or 5g	IEC 60512-6-4 0,35 mm or 5 g
Ingress		
IP protection class	IP20	IP65 / IP67
Particulate ingress (diameter min)	12,5 mm	50 µm
Immersion	None	intermittent liquid jet ≤ 12,5 l/min ≥ 6,5 mm jet > 2, m distance and immersion (≤1 m for ≤30 min)
Climatic and chemical		
Ambient temperature	0 °C to +70 °C	−20 °C to +70 °C
Electromagnetic		
Transfer impedance	See components selection	
Additional parameters out of the MICE definition in IEC 61918:2018, Annex B, may be observed depending on the application. The different products offered for these environments typically meet the requirements of the respective IEC standards. Additional products are offered for special applications (e.g. drag chain, festoon, robots, etc) and the recommendations for cable routing should be followed. The repetitive nature of the shock experienced by the channel shall be taken into account.		

A.4.2.3.2 Use of the described environment to produce a bill of material

Addition:

Manufacturers mark their products designed for CP 3/1 networks in a specific way. Only these marked products shall be used and be mentioned on the bill of material.

The planner shall take into account the mating interface of devices to be connected to the fieldbus network.

A.4.2.4 Specific requirements for generic cabling in accordance with ISO/IEC 11801-3

A.4.3 Network capabilities

A.4.3.1 Network topology

A.4.3.1.1 Common description

A.4.3.1.2 Basic physical topologies for passive networks

Modification:

Documents
Document Sharing Hub

Full document details: BS EN IEC 61784-5-3:2018

For CP 3/1 passive networks, only the bus topology is permitted.

A.4.3.1.3 Basic physical topologies for active networks

A.4.3.1.4 Combination of basic topologies

A.4.3.1.5 Specific requirements for CPs

Addition:

For CP 3/1 networks with a data transmission rate of 12 Mbit/s spurs shall not be used.

For CP 3/1 networks with a data transmission rate of 1,5 Mbit/s spurs should not be used.

Bus repeaters of different manufacturers should not be mixed due to their different optimization strategies. The number of repeaters permitted in a link between any two devices is up to manufacturer's specification.

A.4.3.1.6 Specific requirements for generic cabling in accordance with ISO/IEC 11801-3

A.4.3.2 Network characteristics

A.4.3.2.1 General

A.4.3.2.2 Network characteristics for balanced cabling not based on Ethernet

Replacement:

Table A.2 provides values based on the template given in IEC 61918:2018, Table 1.

Table A.2 – Basic network characteristics for balanced cabling not based on Ethernet (ISO/IEC 8802-3)

Characteristic	CP 3/1 (PROFIBUS)	
Basic transmission technology	**RS 485**	**RS 485-IS**
Length / transmission speed	**Segment length** m	
9,6 kbit/s – 93,75 kbit/s	1 200	1 200
187,5 kbit/s	1 000	1 000
500 kbit/s	400	400
1,5 Mbit/s	200	200
3 – 6 – 12 Mbit/s	100	Not applicable
Maximum capacity	**Maximum no.**	
Devices / segment	32	32
Number of devices / network [a]	125	125
[a] Limited by addressing scheme.		

A.4.3.2.3 Network characteristics for balanced cabling based on Ethernet

Not applicable.

A.4.3.2.4 Network characteristics for optical fibre cabling.

Replacement:

Documents
Document Sharing Hub

Full document details: BS EN IEC 61784-5-3:2018

Table A.3 provides values based on the template given in IEC 61918:2018, Table 3.

Table A.3 – Network characteristics for optical fibre cabling

CP 3/1		
Optical fibre type	**Description**	
Single mode silica	Minimum length (m)	0
	Maximum length (m)	15 000
	Maximum channel Insertion loss/optical power budget (dB)	5
	Connecting hardware	See A.4.4.2.5
Multimode silica	Modal bandwidth (MHz × km) at λ (nm)	600 at 850
	Minimum length (m)	0
	Maximum length (m)	3 000
	Maximum channel insertion loss/optical power budget (dB)	6
	Connecting hardware	See A.4.4.2.5
POF	Modal bandwidth (MHz × km) at λ (nm)	1,0 at 660
	Minimum length (m)	0
	Maximum length (m)	100
	Maximum channel insertion loss/optical power budget (dB)	6
	Connecting hardware	See A.4.4.2.5
Hard clad silica	Modal bandwidth (MHz × km) at λ (nm)	17 at 660
	Minimum length (m)	0
	Maximum length (m)	500
	Maximum channel insertion loss/optical power budget (dB)	3
	Connecting hardware	See A.4.4.2.5

A.4.3.2.5 Specific network characteristics

Not applicable.

A.4.3.2.6 Specific requirements for generic cabling in accordance with ISO/IEC 11801-3

A.4.4 Selection and use of cabling components

A.4.4.1 Cable selection

A.4.4.1.1 Common description

Addition:

Generic cabling in accordance with ISO/IEC 11801-3 is not suitable for the cabling of CP 3/1 networks.

Documents
Document Sharing Hub

Full document details: BS EN IEC 61784-5-3:2018

CP 3/1 networks only can be connected to the generic cabling via a converter/adapter as specified in IEC 61918:2018, 4.1.2.

A.4.4.1.2 Copper cables

A.4.4.1.2.1 Balanced cables for non-Ethernet-based CPs

Not applicable.

A.4.4.1.2.2 Copper cables for non-Ethernet-based CPs

Addition:

Unshielded cables shall not be used with CP 3/1 networks.

Replacement:

Table A.4 provides values based on the template given in IEC 61918:2018, Table 4.

Table A.4 – Information relevant to copper cable: fixed cables

Characteristic	CP 3/1 (PROFIBUS RS 485)	CP 3/1 (PROFIBUS RS 485-IS) [a]
Nominal impedance of cable (tolerance)	135 Ω to 165 Ω; f = 3 MHz to 20 MHz	
Balanced or unbalanced	Balanced	
DCR of conductors	< 55 Ω/km	
DCR of shield	Not defined	
Number of conductors	2	
Shielding	Mandatory	
Colour code for conductor	A = green; B = red	
Jacket colour requirements	Violet	Light blue [b]
Jacket material	Application dependent	
Resistance to harsh environment (e.g. UV, oil resist, LS0H)	Cable types for different applications available	
Agency ratings	Cable types with different ratings available	
Conductor cross-sectional area	≥ 0,34 mm^2	≥ 0,34 mm^2 [c]
Capacitance	< 30 pF/m	
L/R ratio (μH / Ω)	Not specified	≤ 15
The L/R ratio shall be applied for the lowest ambient temperature of the bus cable.		

[a] Cable shall be in accordance with IEC 60079-14.

[b] If a colour is used for identification.

[c] If a fine stranded conductor is used: 0,1 mm is the minimum value required for the diameter of a single wire.

A.4.4.1.3 Cables for wireless installation

A.4.4.1.4 Optical fibre cables

Replacement:

Table A.5 provides values based on the template given in IEC 61918:2018, Table 6.

AVA Documents Document Sharing Hub

Full document details: BS EN IEC 61784-5-3:2018

Table A.5 – Information relevant to optical fibre cables

Characteristics for CP 3/1	9..10/125 µm single mode silica	50/125 µm multimode silica	62,5/125 µm multimode silica	980/1 000 µm step index POF	200/230 µm step index hard clad silica
Standard	IEC 60793-2	IEC 60793-2	IEC 60793-2	IEC 60793-2	IEC 60793-2
Attenuation per km (660 nm)	–	–	–	≤ 230 dB	≤ 10 dB
Attenuation per km (850 nm)	–	≤ 2,7 dB	≤ 3,5 dB	–	–
Attenuation per km (1 320 nm)	≤ 1,0 dB	–	–	–	–
Number of optical fibres	2	2	2	2	2
Connector type (e.g. duplex or simplex)	BFOC/2,5	BFOC/2,5	BFOC/2,5	BFOC/2,5 others	BFOC/2,5 others
Jacket colour requirements	None	None	None	None	None
Jacket material	Several	Several	Several	Several	Several
Resistance to harsh environment (e.g. UV, oil resist, LS0H)	Yes	Yes	Yes	Yes	Yes
Breakout	Yes	Yes	Yes	Yes	Yes

A.4.4.1.5 Special purpose balanced and optical fibre cables

A.4.4.1.6 Specific cable requirements for CPs

Addition:

The data communication part of hybrid cables complies with IEC 61918:2018, 4.4.1.2.2. In addition hybrid cables shall provide 4 × 1,5 mm² copper wires for power supply.

A.4.4.1.7 Specific requirements for generic cabling in accordance with ISO/IEC 11801-3

A.4.4.2 Connecting hardware selection

A.4.4.2.1 Common description

Modification:

Applies with consideration of A.4.2.3.1.

A.4.4.2.2 Connecting hardware for balanced cabling CPs based on Ethernet

Not applicable.

A.4.4.2.3 Connecting hardware for copper cabling CPs not based on Ethernet

Replacement:

Table A.6 provides values based on the template given in IEC 61918:2018, Table 8.

Documents
Document Sharing Hub

Full document details: BS EN IEC 61784-5-3:2018

Table A.6 – Connectors for copper cabling CPs not based on Ethernet

	IEC 60807-2 or IEC 60807-3	IEC 60947-5-2 or IEC 61076-2-101			IEC 61169-8	ANSI/(NFPA) T3.5.29 R1-2007		Others		
	Sub-D	M12-5 with A-coding	M12-5 with B-coding	M12-n with X-coding	Coaxial (BNC)	M 18	7/8-16 UN-2B THD	Open style	Terminal block	Others
CP 3/1	9 pin	No	Yes	No	No	No	No	No	Yes	Hybrid style
NOTE For M12-5 connectors, there are many applications using these connectors that are not compatible and when mixed can cause damage to the applications.										

A.4.4.2.4 Connecting hardware for wireless installation

A.4.4.2.5 Connecting hardware for optical fibre cabling

Replacement:

Table A.7 provides values based on the template given in IEC 61918:2018, Table 9.

Table A.7 – Optical fibre connecting hardware

	IEC 61754-2	IEC 61754-4	IEC 61754-24	IEC 61754-20	IEC 61754-22	Others
	BFOC/2,5	SC	SC-RJ	LC	F-SMA	
CP 3/1	Yes	No	No	No	No	Others for POF and hard clad silica
NOTE The IEC 61754 series defines the optical fibre connector mechanical interfaces; performance specifications for optical fibre connectors terminated to specific fibre types are standardised in the IEC 61753 series.						

Replacement:

Table A.8 provides values based on the template given in IEC 61918:2018, Table 10.

Table A.8 – Relationship between FOC and fibre types (CP 3/1)

FOC	Fibre type					
	9..10/125 µm single mode silica	50/125 µm multimode silica	62,5/125 µm multimode silica	980/1 000 µm step index POF	200/230 µm step index hard clad silica	Others
BFOC/2,5	Yes	Yes	Yes	Recommended	Recommended	No
SC	No	No	No	Yes	Yes	No
SC-RJ	No	No	No	Yes	Yes	No
LC	No	No	No	Yes	Yes	No
F-SMA	No	No	No	Yes	Yes	No
NOTE The IEC 61754 series defines the optical fibre connector mechanical interfaces; performance specifications for optical fibre connectors terminated to specific fibre types are standardised in the IEC 60874 series.						

AVA Documents Document Sharing Hub

Full document details: BS EN IEC 61784-5-3:2018

A.4.4.2.6 Specific requirements for CPs

Not applicable.

A.4.4.2.7 Specific requirements for generic cabling in accordance with ISO/IEC 11801-3

A.4.4.3 Connections within a channel/permanent link

A.4.4.3.1 Common description

A.4.4.3.2 Balanced cabling connections and splices for CPs based on Ethernet

Subclause A.4.4.3.2.3 has replacement:

For CP 3/1 networks with RS 485-IS splices are not allowed.

A.4.4.3.3 Copper cabling connections and splices for CPs not based on Ethernet

Subclause 4.4.3.3.1 has addition:

Refer to the manufacturer's data sheet regarding number of allowed connections.

A.4.4.3.4 Optical fibre cabling connections and splices for CPs based on Ethernet

Not applicable.

A.4.4.3.5 Optical fibre cabling connections and splices for CPs not based on Ethernet

Addition:

The maximum channel attenuation is given in Table A.17.

A.4.4.3.6 Specific requirements for generic cabling in accordance with ISO/IEC 11801-3

A.4.4.4 Terminators

A.4.4.4.1 Common description

Addition:

For CP 3/1 networks terminators shall be used. Each end of a network segment shall be terminated.

A.4.4.4.2 Specific requirements for CPs

Addition:

For CP 3/1 networks with RS 485 interface, the terminators shall be in accordance with 22.1.2.4 of IEC 61158-2:2014.

For CP 3/1 networks with RS 485-IS the terminators shall be in accordance with 22.2.2.4 of IEC 61158-2:2014. If the terminators are built-in within a device, then power supply with current limitation via built-in resistors shall be provided (see A.5.3.4).

Documents
Document Sharing Hub

Full document details: BS EN IEC 61784-5-3:2018

A.4.4.4.3 Specific requirements for generic cabling in accordance with ISO/IEC 11801-3

A.4.4.5 Device location and connection

A.4.4.5.1 Common description

Addition:

If devices according to CP 3/1 with RS 485-IS are intended to be used in hazardous locations, then the national regulation shall be observed when installing such devices.

A.4.4.5.2 Specific requirements for CPs

Refer to the manufacturer's data sheet regarding device location and connection.

A.4.4.5.3 Specific requirements for wireless installation

Not applicable.

A.4.4.5.4 Specific requirements for generic cabling in accordance with ISO/IEC 11801-3

A.4.4.6 Coding and labelling

A.4.4.6.1 Common description

Addition:

For CP 3/1 networks with RS 485-IS the colour coding of the bus cable for intrinsically safe circuits shall be light blue.

A.4.4.6.2 Additional requirements for CPs

A.4.4.6.3 Specific requirements for CPs

Not applicable.

A.4.4.6.4 Specific requirements for generic cabling in accordance with ISO/IEC 11801-3

Not applicable.

A.4.4.7 Earthing and bonding of equipment and devices and shielded cabling

A.4.4.7.1 Common description

A.4.4.7.1.1 Basic requirements

Addition:

Compliance to IEC 60364-4-41 shall be ensured. Requirements of local or national regulations for the erection of electrical or communication shall be observed in addition.

The configuration of the LV power distribution system shall comply with IEC 60364-1:2005, 312.2.1, TN-S systems, which means separated conductors for neutral (N) and protective earth (PE). Equipotential properties of earth and protection earth are required. Requirements of local or national regulations for the erection of electrical or communication networks shall be observed in addition.

Documents
Document Sharing Hub
Full document details: BS EN IEC 61784-5-3:2018

Where the power distribution system does not comply with the TN-S system and AC current can be measured on the fieldbus cable shielding the fieldbus network should be built with OF-cables (see IEC 61918:2018, Annex E for details).

A properly installed AC power system ensures that no currents flow through shields and/or equipotential bonding conductors connected to the CBN.

Currents higher than approximately 0,1 A indicate problems in the electrical installation (that means more than one connection between N and PE anywhere in the power distribution system).

Indications of an unsuitable AC power supply are as follows:

- Currents on the PE conductor.
- Currents through cable shields.
- Currents through water pipes and heating pipes.
- Progressive corrosion at earthing terminals, on lightning conductors, and water pipes.

NOTE Sporadic events such as switching, short circuits, or atmospheric discharge (lightning strike) can cause current peaks in the system many times higher than the average value.

A.4.4.7.1.2 Planner tasks

A.4.4.7.1.3 Methods for controlling potential differences in the earth system

A.4.4.7.1.4 Selection of the earthing and bonding system

A.4.4.7.2 Bonding and earthing of enclosures and pathways

A.4.4.7.2.1 Equalization and earthing conductor sizing and length

A.4.4.7.2.2 Bonding straps and sizing

A.4.4.7.2.3 Surface preparation and methods

A.4.4.7.2.4 Bonding and earthing

A.4.4.7.3 Earthing methods

A.4.4.7.3.1 Equipotential

Addition:

With CP 3/1 networks an equipotential mesh earthing system shall be used.

A.4.4.7.3.2 Star

Replacement:

The star earthing system shall not be used for CP 3/1 networks.

A.4.4.7.3.3 Earthing of equipment (devices)

A.4.4.7.3.4 Copper bus bars

A.4.4.7.4 Shield earthing

A.4.4.7.4.1 Non-earthing or parallel RC

Not applicable.

Documents
Document Sharing Hub

Full document details: BS EN IEC 61784-5-3:2018

A.4.4.7.4.2 Direct

Addition:

Shielding of bus cables shall always be connected to earth at both ends of the cables. Single point shield termination shall be avoided.

Where equipotential bonding is not guaranteed or cannot be achieved (for example by installing an equipotential bonding conductor in parallel to the distributed communication cables) optical fibre cabling should be used.

A.4.4.7.4.3 Derivatives of direct and parallel RC

A.4.4.7.5 Specific requirements for CPs

Addition:

For CP 3/1 networks with RS 485-IS the following applies:

For the operation of an installation with fieldbus systems, the earthing concept and thereby also the shielding of the electrical cables is a very important issue. When finalizing the earthing concept, the following aspects should be taken into consideration:

- Ensuring electromagnetic compatibility (EMC).
- Explosion protection.
- Human safety.

Conventional field units (for example with a 4 mA to 20 mA interface) which are connected via two-wire cables with isolating repeaters in the control room process DC signals or low-frequency AC signals. The influence of wire-conducted noise signals with higher frequencies can be suppressed by means of appropriate input filters having a low cut-off frequency. Thus, in contrast to fieldbus systems, for such devices a predominantly electrostatically acting cable shield (earthed on one side) is sufficient.

In fieldbus systems however, the usable frequency for the transmission of the signals is considerably higher – and the requirements placed on the earthing concept of the system accordingly tougher, i.e. earthing as described before (using predominantly electrostatically cables) is not sufficient. Where AC signals are being processed, the components and also the interconnection of elements, like cables, shall be protected against the influence of electromagnetic fields. The protective measures should create a complete encapsulation around the sensitive components. The larger the processed signal frequencies in the systems, the greater the requirement placed on the completeness of this gapless protective encapsulation. Thus, the shielding and earthing concept has to satisfy these requirements in order to constitute the basis for the EMC tests performed by the device manufacturers.

In order to meet the described requirements, shields of cables shall be connected with the terminal locations in the devices intended for this purpose. When connecting the shields, a low-impedance connection should be ensured – considering the high noise frequencies. This applies not only for the connection of the cable shields, but also for the earthing connection of the device. Extended wires usually do not meet these requirements.

For the shielding and earthing measures to have their optimum effect, the devices and shields shall be earthed more than once. According to 12.2.2.3 in IEC 60079-14:—, this method, which is optimal for electromagnetic compatibility and human safety, can be utilised without restriction in the area of the entire installation.

If the installation is made and maintained that it can be ensured with a high degree of certainty that a potential equalization exists between each end of the circuit (that means

AVA Documents
Document Sharing Hub

between the hazardous area and safe area) then cable screens and conducting screens at both ends of the cable and the screens at intermediate points should be connected to earth.

In the process, in the hazardous area according to 6.3 in IEC 60079-14:—, an equipotential bonding system is an absolute requirement anyway. The measures detailed there (inclusion of protective conductors, protective tubes, metallic cable shields, cable reinforcements and metallic components) can be supplemented using the following measures:

- Laying of the bus cables on metallic cable trays.
- Incorporation of the cable tray into the equipotential bonding system.
- Interconnections of the cable trays among each other and to metallic components – these interconnections should consider safety aspects, be of sufficient current-loading capacity and be designed for high-frequency capability and low impedance.

Figure A.1 shows the recommended combination of shielding and earthing for CP 3/1 networks with RS 485-IS.

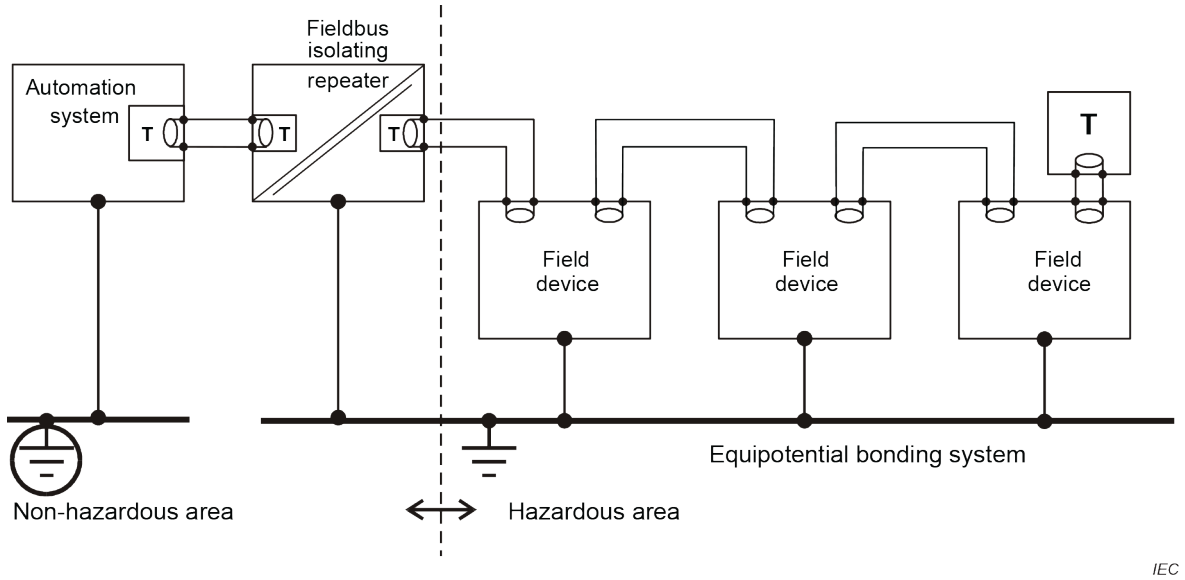

Figure A.1 – Recommended combination of shielding and earthing for CP 3/1 networks with RS 485-IS

At least, equipotential islands should be created by taking these measures. It shall be ensured that low-frequency transient currents (50/60 Hz and harmonics) on the shielding, such as for example those which can develop due to potential differences between "equipotential islands", do not damage the cable and cannot induce sparks in the hazardous area. Damage and sparks can be prevented for example by means of a potential equalization cable having a broad cross-section and laid parallel to the bus cable.

In order to prevent impermissible energy potentials from being carried into the hazardous area, the cable shield shall be connected "safely" to the equipotential bonding system at all points of transition between the safe and hazardous areas. Here, "safely" means that the individual conductors of the cable shield be twisted, be protected from splaying by means of an end covering sleeve and be connected to an appropriate screw terminal.

The connection of the cable shields within the hazardous area is not relevant to safety. It can be realized using conventional shield terminals (clamp straps).

Documents
Document Sharing Hub
Full document details: BS EN IEC 61784-5-3:2018

A.4.4.7.6 Specific requirements for generic cabling in accordance with ISO/IEC 11801-3

A.4.4.8 Storage and transportation of cables

A.4.4.8.1 Common description

A.4.4.8.2 Specific requirements for CPs

Not applicable.

A.4.4.8.3 Specific requirements for generic cabling in accordance with ISO/IEC 11801-3

A.4.4.9 Routing of cables

A.4.4.9.1 Common description

A.4.4.9.2 Cable routing of assemblies

A.4.4.9.3 Detailed requirements for cable routing inside enclosures

A.4.4.9.4 Cable routing inside buildings

Addition:

For CP 3/1 networks with RS 485-IS the cables for intrinsically safe circuits shall be kept separate from powerlines due to the possible coupling of energy to these cables. IEC 60079-14 and national regulations shall apply.

A.4.4.9.5 Cable routing outside and between buildings

Addition:

Balanced cables routed between buildings shall be installed on metal cable racks. Mesh openings shall be avoided in order to improve EMC capabilities.

Direct buried cables shall be routed in a plastic pipe at least 60 cm below the surface. A cable warning tape shall be placed above it approximately 20 cm below the surface. The equipotential bonding between the buildings (for example galvanized earth strap) shall be routed approximately 20 cm above the fieldbus cable. The earth strap is also used as protection against the effects of a lightning strike. The minimum cross section for the equipotential bonding according to IEC 60364-5-54 for steel is 50 mm^2.

However optical fibre cabling should preferably be used between buildings.

A.4.4.9.6 Installing redundant communication cables

A.4.4.10 Separation of circuits

Addition:

For CP 3/1 networks the distances as given in EN 50174 apply. For CP 3/1 networks with RS 485-IS the IEC 60079-14 shall apply in addition.

Documents
Document Sharing Hub

Full document details: BS EN IEC 61784-5-3:2018

A.4.4.11 Mechanical protection of cabling components

A.4.4.11.1 Common description

A.4.4.11.2 Specific requirements for CPs

Not applicable.

A.4.4.11.3 Specific requirements for generic cabling in accordance with ISO/IEC 11801-3

A.4.4.12 Installation in special areas

A.4.4.12.1 Common description

A.4.4.12.2 Specific requirements for CPs

Not applicable.

A.4.4.12.3 Specific requirements for generic cabling in accordance with ISO/IEC 11801-3

A.4.5 Cabling planning documentation

A.4.5.1 Common description

A.4.5.2 Cabling planning documentation for CPs

A.4.5.3 Network certification documentation

A.4.5.4 Cabling planning documentation for generic cabling in accordance with ISO/IEC 11801-3

A.4.6 Verification of cabling planning specification

A.5 Installation implementation

A.5.1 General requirements

A.5.1.1 Common description

A.5.1.2 Installation of CPs

Addition:

For CP 3/1 networks with RS 485-IS the IEC 60079-14 shall apply in addition.

A.5.1.3 Installation of generic cabling in industrial premises

A.5.2 Cable installation

A.5.2.1 General requirements for all cabling types

Subclause A.5.2.1.2 has replacement:

Table A.9 provides values based on the template given in IEC 61918:2018, Table 18.

Documents
Document Sharing Hub

Full document details: BS EN IEC 61784-5-3:2018

Table A.9 – Parameters for balanced cables

Characteristic		Value
Mechanical force	Minimum bending radius, single bending (mm)	30 to 75 [a]
	Bending radius, multiple bending (mm)	60 to 150 [a]
	Pull forces (N)	80 to 150 [a]
	Permanent tensile forces (N)	80 to 100 [a]
	Maximum lateral forces (N/cm)	[a]
	Temperature range during installation (°C)	−20 to +60 [a]
[a] Depending on cable type; see manufacturer's data sheet.		

Table A.10 provides values based on the template given in IEC 61918:2018, Table 19.

Table A.10 – Parameters for silica optical fibre cables

Characteristic		Value
Mechanical force	Minimum bending radius, single bending (mm)	50 to 200 [a]
	Bending radius, multiple bending (mm)	50 to 200 [a]
	Pull forces (N)	500 to 800 [a]
	Permanent tensile forces (N)	500 to 800 [a]
	Maximum lateral forces (N/cm)	300 to 500
	Temperature range during installation (°C)	–5 to +50 [a]
[a] Depending on cable type; see manufacturer's data sheet.		

Replacement:

Table A.11 provides values based on the template given in IEC 61918:2018, Table 20.

Table A.11 – Parameters for POF optical fibre cables

Characteristic		CP 3/1 (PROFIBUS)
Mechanical force	Minimum bending radius, single bending (mm)	30 to 100 [a]
	Bending radius, multiple bending (mm)	50 to 150 [a]
	Pull forces (N)	50 to 100 [a]
	Permanent tensile forces (N)	Not allowed
	Maximum lateral forces (N/cm)	35 to 100
	Temperature range during installation (°C)	0 to 50 [a]
[a] Depending on cable type; see manufacturer's data sheet.		

Table A.12 provides values based on the template given in IEC 61918:2018, Table 21.

Documents
Document Sharing Hub
Full document details: BS EN IEC 61784-5-3:2018

Table A.12 – Parameters for hard clad silica optical fibre cables

Characteristic		CP 3/1 (PROFIBUS)
Mechanical force	Minimum bending radius, single bending (mm)	75 to 200 [a]
	Bending radius, multiple bending (mm)	75 to 200 [a]
	Pull forces (N)	100 to 800 [a]
	Permanent tensile forces (N)	≤ 100 [a]
	Maximum lateral forces (N/cm)	≤ 75 to 300
	Temperature range during installation (°C)	–5 to +50 [a]
[a] Depending on cable type; see manufacturer's data sheet.		

A.5.2.2 Installation and routing

A.5.2.2.1 Common description

Modification:

Applies with respect to the condensed MICE table according to A.4.2.3.1 of this document.

A.5.2.2.2 Separation of circuits

A.5.2.3 Specific requirements for CPs

Not applicable.

A.5.2.4 Specific requirements for wireless installation

Not applicable.

A.5.2.5 Specific requirements for generic cabling in accordance with ISO/IEC 11801-3

A.5.3 Connector installation

A.5.3.1 Common description

Addition:

Because no mechanical coding exists between intrinsically safe and non-intrinsically safe circuits, the manufacturer shall label his components appropriately in order to prevent connection mistakes.

All left open connections (for example male connectors open wire ends) shall be protected against unattended connections to other circuits or earth by using appropriate insulation caps or similar protection techniques.

A.5.3.2 Shielded connectors

A.5.3.3 Unshielded connectors

Not applicable.

A.5.3.4 Specific requirements for CPs

Addition:

Documents
Document Sharing Hub

Full document details: BS EN IEC 61784-5-3:2018

A.5.3.4.1 Sub-D connectors

CP 3/1 networks use the 9-pin Sub-D connector inside control cabinets (IP20). Unless using pre-made cable assemblies, the connector shall be fitted to the CP 3/1 cable.

The CP 3/1 cables are normally daisy-chained through the connector. This allows CP 3/1 device connection without using T-junctions (which introduce spur lines). For this reason, CP 3/1 connectors normally have two cable entries, each with a set of terminals. Each set of terminals is normally labelled "A" and "B" or given a colour reference, for example "green" and "red". These two terminals connect to the two data wires in the CP 3/1 cable. The colour scheme shall be used consistently within a segment; that means the cores shall not be swapped over. The CP 3/1 guideline Interconnection Technology specifies the following assignment:

- A: green
- B: red

CP 3/1 cables approved by the connector manufacturer for use with the respective connector shall be used. This applies particularly to the use of insulation displacement technology.

Sub-D-connectors shall be used to ensure a conducting of the shield with the connector by some grooves. Pin assignment shall be as shown in Figure A.2, Table A.13, and Table A.14.

The pin numbering of a 9 pin Sub-D connector shall be as shown in Figure A.2.

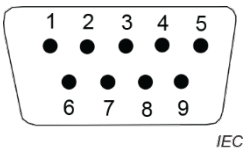

Figure A.2 – Sub-D connector pin numberings (front view)

Table A.13 shows the pin assignment of a 9 pin Sub-D connector when used within CP 3/1 networks and RS 485.

Table A.13 – Use of 9 pin Sub-D connector pins (RS 485)

Pin	Signal	Description		Specification
		Cable	Device	
1	(Shield)	Shield or potential equalization		Not recommended
2	M24		Earth of 24 V power supply	Optional [b]
3	RxD/TxD-P	Receive/transmit data; line B (red)		Mandatory
4	CNTR-P		Control of repeater direction	Optional [b]
5	DGND		Data ground (reference voltage to VP)	Mandatory
6	VP [a]		Power supply +5 V (e.g. for bus termination)	Mandatory
7	P24		+24 V power supply	Optional [b]
8	RxD/TxD-N	Receive/transmit data; line A (green)		Mandatory
9	CNTR-N		Control of repeater direction	Optional [b]

[a] Minimum current capability is 10 mA.

[b] These signals are expected to be provided by the device if converters from RS 485 to fibre optic transmission are supported.

Table A.14 shows pin assignment of a 9 pin Sub-D connector when used within CP 3/1 networks and RS 485-IS.

AVA Documents
Document Sharing Hub

Table A.14 – Use of 9 pin Sub-D connector pins (RS 485-IS)

Pin	Signal	Description		Specification
		Cable	Device	
1	(Shield)	Shield or potential equalization		Not recommended
2	NC		Not connected	–
3	RxD/TxD-P	Receive/transmit data; line B (red)		Mandatory
4	NC		Not connected	–
5	ISM		Intrinsically safe bus termination minus	Mandatory
6	ISP		Intrinsically safe bus termination plus	Mandatory
7	NC		Not connected	–
8	RxD/TxD-N	Receive/transmit data; line A (green)		Mandatory
9	NC		Not connected	–
Use of the signals ISM and ISP only with an external termination. Without the termination resistor circuit switched on a voltage of 3,3 V ± 5% shall be provided (ISP – ISM).				

A.5.3.4.2 M12-5 B-coding connectors

The 5-pin M12 connector is used for CP 3/1 networks where extreme industrial environments exist.

Only shielded connectors are permitted. The connectors feature a mechanical key (B-coding).

Pin assignment is as shown in Figure A.3, Figure A.4, Table A.15, and Table A.16.

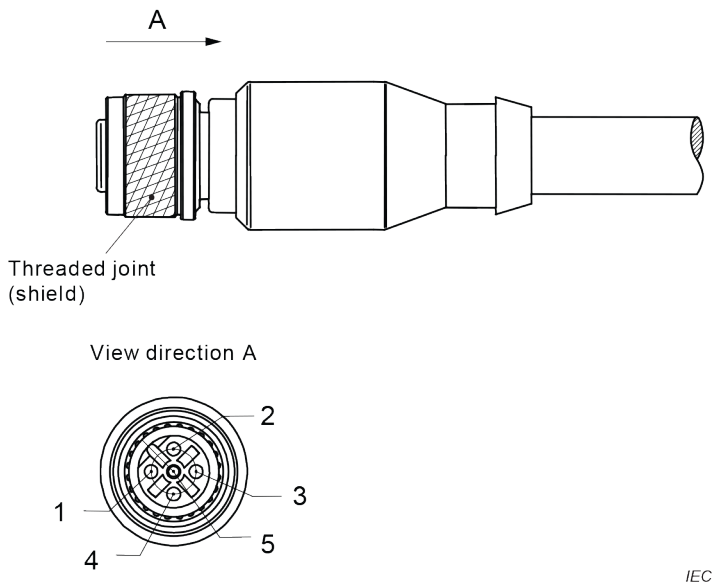

Figure A.3 – 5-pin M12 female socket

Documents
Document Sharing Hub
Full document details: BS EN IEC 61784-5-3:2018