BS EN IEC 61970-301:2020

BSI Standards Publication

Energy management system application program interface (EMS-API)

Part 301: Common information model (CIM) base

Documents
Document Sharing Hub

Full document details: BS EN IEC 61970-301:2020

National foreword

This British Standard is the UK implementation of EN IEC 61970-301:2020. It is identical to IEC 61970-301:2020. It supersedes BS EN 61970-301:2017, which is withdrawn.

The UK participation in its preparation was entrusted to Technical Committee PEL/57, Power systems management and associated information exchange.

A list of organizations represented on this committee can be obtained on request to its committee manager.

This publication does not purport to include all the necessary provisions of a contract. Users are responsible for its correct application.

© The British Standards Institution 2020
Published by BSI Standards Limited 2020

ISBN 978 0 539 00157 0

ICS 33.200

Compliance with a British Standard cannot confer immunity from legal obligations.

This British Standard was published under the authority of the Standards Policy and Strategy Committee on 30 September 2020.

Amendments/corrigenda issued since publication

Date	Text affected

Documents
Document Sharing Hub

Full document details: BS EN IEC 61970-301:2020

EUROPEAN STANDARD

NORME EUROPÉENNE

EUROPÄISCHE NORM

EN IEC 61970-301

August 2020

ICS 33.200

Supersedes EN 61970-301:2017 and all of its amendments and corrigenda (if any)

English Version

Energy management system application program interface (EMS-API) - Part 301: Common information model (CIM) base (IEC 61970-301:2020)

Interface de programmation d'application pour système de gestion d'énergie (EMS-API) - Partie 301: Base de modèle d'information commun (CIM) (IEC 61970-301:2020)

Schnittstelle für Anwendungsprogramme für Netzführungssysteme (EMS-API) - Teil 301: Allgemeines Informationsmodell (CIM), Basismodell (IEC 61970-301:2020)

This European Standard was approved by CENELEC on 2020-07-31. CENELEC members are bound to comply with the CEN/CENELEC Internal Regulations which stipulate the conditions for giving this European Standard the status of a national standard without any alteration.

Up-to-date lists and bibliographical references concerning such national standards may be obtained on application to the CEN-CENELEC Management Centre or to any CENELEC member.

This European Standard exists in three official versions (English, French, German). A version in any other language made by translation under the responsibility of a CENELEC member into its own language and notified to the CEN-CENELEC Management Centre has the same status as the official versions.

CENELEC members are the national electrotechnical committees of Austria, Belgium, Bulgaria, Croatia, Cyprus, the Czech Republic, Denmark, Estonia, Finland, France, Germany, Greece, Hungary, Iceland, Ireland, Italy, Latvia, Lithuania, Luxembourg, Malta, the Netherlands, Norway, Poland, Portugal, Republic of North Macedonia, Romania, Serbia, Slovakia, Slovenia, Spain, Sweden, Switzerland, Turkey and the United Kingdom.

European Committee for Electrotechnical Standardization
Comité Européen de Normalisation Electrotechnique
Europäisches Komitee für Elektrotechnische Normung

CEN-CENELEC Management Centre: Rue de la Science 23, B-1040 Brussels

© 2020 CENELEC All rights of exploitation in any form and by any means reserved worldwide for CENELEC Members.

Ref. No. EN IEC 61970-301:2020 E

AVA Documents Document Sharing Hub

Full document details: BS EN IEC 61970-301:2020

European foreword

The text of document 57/2210/FDIS, future edition 7 of IEC 61970-301, prepared by IEC/TC 57 "Power systems management and associated information exchange" was submitted to the IEC-CENELEC parallel vote and approved by CENELEC as EN IEC 61970-301:2020.

The following dates are fixed:

- latest date by which the document has to be implemented at national level by publication of an identical national standard or by endorsement (dop) 2021-05-01
- latest date by which the national standards conflicting with the document have to be withdrawn (dow) 2023-07-31

This document supersedes EN 61970-301:2017 and all of its amendments and corrigenda (if any).

Attention is drawn to the possibility that some of the elements of this document may be the subject of patent rights. CENELEC shall not be held responsible for identifying any or all such patent rights.

This document has been prepared under a mandate given to CENELEC by the European Commission and the European Free Trade Association.

Endorsement notice

The text of the International Standard IEC 61970-301:2020 was approved by CENELEC as a European Standard without any modification.

In the official version, for Bibliography, the following notes have to be added for the standards indicated:

IEC 61850-7-3	NOTE	Harmonized as EN 61850-7-3
IEC 61968-11:2013	NOTE	Harmonized as EN 61968-11:2013 (not modified)
IEC 61970-501	NOTE	Harmonized as EN 61970-501
IEC 62325 (series)	NOTE	Harmonized as EN IEC 62325 (series)

Documents
Document Sharing Hub

Full document details: BS EN IEC 61970-301:2020

Annex ZA
(normative)

Normative references to international publications with their corresponding European publications

The following documents are referred to in the text in such a way that some or all of their content constitutes requirements of this document. For dated references, only the edition cited applies. For undated references, the latest edition of the referenced document (including any amendments) applies.

NOTE 1 Where an International Publication has been modified by common modifications, indicated by (mod), the relevant EN/HD applies.

NOTE 2 Up-to-date information on the latest versions of the European Standards listed in this annex is available here: www.cenelec.eu.

Publication	Year	Title	EN/HD	Year
IEC 61850	series	Communication networks and systems for power utility automation - Part 10: Conformance testing	EN 61850	series
IEC 61850-7-4	2010	Communication networks and systems for power utility automation - Part 7-4: Basic communication structure - Compatible logical node classes and data object classes	EN 61850-7-4	2010
IEC 61968	series	Application integration at electric utilities - System interfaces for distribution management - Part 1: Interface architecture and general recommendations	EN IEC 61968	series
IEC/TS 61970-2	-	Energy management system application program interface (EMS-API) - Part 2: Glossary	CLC/TS 61970-2	-
UML 2.0 Specification	-	Object Management Group: UML 2.0 Specification	-	-

Documents
Document Sharing Hub

Full document details: BS EN IEC 61970-301:2020

This page deliberately left blank

Documents
Document Sharing Hub

Full document details: BS EN IEC 61970-301:2020

CONTENTS

FOREWORD ... 35
INTRODUCTION ... 37
1 Scope ... 39
2 Normative references ... 39
3 Terms and definitions ... 40
4 CIM specification ... 40
4.1 Overview ... 40
4.2 CIM modelling notation ... 41
4.3 CIM packages ... 41
4.4 CIM classes and relationships ... 43
4.4.1 Classes ... 43
4.4.2 Generalization ... 44
4.4.3 Simple association ... 45
4.4.4 Aggregation ... 46
4.5 CIM model concepts and examples ... 46
4.5.1 Concepts ... 46
4.5.2 Containment, equipment hierarchies and naming ... 47
4.5.3 Names model ... 48
4.5.4 Connectivity model ... 49
4.5.5 Inheritance hierarchy ... 52
4.5.6 Transformer model ... 54
4.5.7 Transformer tap modelling ... 56
4.5.8 Phase wire modelling ... 69
4.5.9 Grounding devices modelling ... 71
4.5.10 Cuts, clamps and jumpers model ... 75
4.5.11 Measurements and controls ... 79
4.5.12 Regulating control models ... 84
4.5.13 DC model for CIM ... 85
4.5.14 Static Var Compensator Voltage Regulation ... 107
4.5.15 ICCP Configuration Model ... 108
4.5.16 Feeder Model ... 115
4.5.17 Control area modelling ... 115
4.6 Modelling guidelines ... 117
4.6.1 Modelling for change ... 117
4.6.2 Process for amendments to the CIM ... 117
4.6.3 Changes to the CIM UML model ... 118
4.6.4 Changes to the CIM standards documents ... 118
4.6.5 Deprecations ... 118
4.6.6 CIM profiles ... 118
4.7 Modelling tools ... 119
4.8 User implementation conventions ... 119
4.8.1 Conventions beyond UML ... 119
4.8.2 Number of terminals for ConductingEquipment objects ... 119
4.8.3 Nominal quantities ... 120
4.8.4 Datatypes ... 120
4.9 CIM modelling examples ... 120
5 Detailed model ... 120

AVA Documents
Document Sharing Hub

5.1 Overview ... 120
5.2 Context ... 120
6 Package Base ... 122
6.1 General ... 122
6.2 Package Domain ... 122
6.2.1 General ... 122
6.2.2 ActivePower datatype ... 128
6.2.3 ActivePowerChangeRate datatype ... 129
6.2.4 ActivePowerPerCurrentFlow datatype ... 129
6.2.5 ActivePowerPerFrequency datatype ... 129
6.2.6 Admittance datatype ... 129
6.2.7 AngleDegrees datatype ... 130
6.2.8 AngleRadians datatype ... 130
6.2.9 ApparentPower datatype ... 130
6.2.10 Area datatype ... 130
6.2.11 Boolean primitive ... 131
6.2.12 Capacitance datatype ... 131
6.2.13 CapacitancePerLength datatype ... 131
6.2.14 Classification datatype ... 131
6.2.15 Conductance datatype ... 131
6.2.16 ConductancePerLength datatype ... 132
6.2.17 CostPerEnergyUnit datatype ... 132
6.2.18 CostPerHeatUnit datatype ... 132
6.2.19 CostPerVolume datatype ... 132
6.2.20 CostRate datatype ... 133
6.2.21 Currency enumeration ... 133
6.2.22 CurrentFlow datatype ... 137
6.2.23 Damping datatype ... 137
6.2.24 Date primitive ... 137
6.2.25 DateInterval compound ... 137
6.2.26 DateTime primitive ... 138
6.2.27 DateTimeInterval compound ... 138
6.2.28 Decimal primitive ... 138
6.2.29 DecimalQuantity compound ... 138
6.2.30 Displacement datatype ... 138
6.2.31 Duration primitive ... 139
6.2.32 Emission datatype ... 139
6.2.33 Float primitive ... 139
6.2.34 FloatQuantity compound ... 139
6.2.35 Frequency datatype ... 139
6.2.36 HeatRate datatype ... 140
6.2.37 Hours datatype ... 140
6.2.38 Impedance datatype ... 140
6.2.39 Inductance datatype ... 140
6.2.40 InductancePerLength datatype ... 141
6.2.41 Integer primitive ... 141
6.2.42 IntegerQuantity compound ... 141
6.2.43 KiloActivePower datatype ... 141
6.2.44 Length datatype ... 142

AVA Documents
Document Sharing Hub

6.2.45 Mass datatype ... 142
6.2.46 Minutes datatype ... 142
6.2.47 Money datatype ... 142
6.2.48 MonthDay primitive ... 143
6.2.49 MonthDayInterval compound ... 143
6.2.50 PU datatype ... 143
6.2.51 PerCent datatype ... 143
6.2.52 Pressure datatype ... 143
6.2.53 Reactance datatype ... 144
6.2.54 ReactancePerLength datatype ... 144
6.2.55 ReactivePower datatype ... 144
6.2.56 RealEnergy datatype ... 144
6.2.57 Resistance datatype ... 145
6.2.58 ResistancePerLength datatype ... 145
6.2.59 RotationSpeed datatype ... 145
6.2.60 Seconds datatype ... 146
6.2.61 Speed datatype ... 146
6.2.62 String primitive ... 146
6.2.63 StringQuantity compound ... 146
6.2.64 Susceptance datatype ... 146
6.2.65 SusceptancePerLength datatype ... 147
6.2.66 Temperature datatype ... 147
6.2.67 Time primitive ... 147
6.2.68 TimeInterval compound ... 147
6.2.69 UnitMultiplier enumeration ... 148
6.2.70 UnitSymbol enumeration ... 149
6.2.71 Voltage datatype ... 154
6.2.72 VoltagePerReactivePower datatype ... 154
6.2.73 Volume datatype ... 154
6.2.74 VolumeFlowRate datatype ... 155
6.2.75 WaterLevel datatype ... 155
6.3 Package Core ... 155
6.3.1 General ... 155
6.3.2 ACDCTerminal ... 160
6.3.3 BaseFrequency ... 161
6.3.4 BasePower ... 162
6.3.5 BaseVoltage ... 162
6.3.6 BasicIntervalSchedule ... 163
6.3.7 Bay ... 163
6.3.8 BreakerConfiguration enumeration ... 164
6.3.9 BusbarConfiguration enumeration ... 165
6.3.10 ConductingEquipment ... 165
6.3.11 ConnectivityNode ... 166
6.3.12 ConnectivityNodeContainer ... 167
6.3.13 Curve ... 167
6.3.14 CurveData root class ... 168
6.3.15 CurveStyle enumeration ... 169
6.3.16 Equipment ... 169
6.3.17 EquipmentContainer ... 171

AVA Documents
Document Sharing Hub
Full document details: BS EN IEC 61970-301:2020

6.3.18 Feeder ... 171
6.3.19 GeographicalRegion ... 172
6.3.20 IdentifiedObject root class ... 173
6.3.21 IrregularIntervalSchedule ... 174
6.3.22 IrregularTimePoint root class ... 174
6.3.23 Name root class ... 175
6.3.24 NameType root class ... 175
6.3.25 NameTypeAuthority root class ... 176
6.3.26 OperatingParticipant ... 176
6.3.27 OperatingShare root class ... 177
6.3.28 PSRType ... 177
6.3.29 PhaseCode enumeration ... 178
6.3.30 PowerSystemResource ... 179
6.3.31 RegularIntervalSchedule ... 179
6.3.32 RegularTimePoint root class ... 180
6.3.33 ReportingGroup ... 181
6.3.34 ReportingSuperGroup ... 181
6.3.35 SubGeographicalRegion ... 182
6.3.36 Substation ... 183
6.3.37 Terminal ... 184
6.3.38 VoltageLevel ... 185
6.4 Package Wires ... 186
6.4.1 General ... 186
6.4.2 AsynchronousMachineKind enumeration ... 201
6.4.3 ACLineSegment ... 202
6.4.4 ACLineSegmentPhase ... 203
6.4.5 AsynchronousMachine ... 204
6.4.6 Breaker ... 206
6.4.7 BusbarSection ... 208
6.4.8 Clamp ... 209
6.4.9 CompositeSwitch ... 210
6.4.10 Conductor ... 211
6.4.11 Connector ... 212
6.4.12 CoolantType enumeration ... 213
6.4.13 Cut ... 213
6.4.14 Disconnector ... 215
6.4.15 DisconnectingCircuitBreaker ... 216
6.4.16 EarthFaultCompensator ... 217
6.4.17 EnergyConnection ... 218
6.4.18 EnergyConsumer ... 219
6.4.19 EnergyConsumerPhase ... 221
6.4.20 EnergySchedulingType ... 222
6.4.21 EnergySource ... 222
6.4.22 EnergySourcePhase ... 224
6.4.23 ExternalNetworkInjection ... 225
6.4.24 FrequencyConverter ... 227
6.4.25 Fuse ... 228
6.4.26 Ground ... 229
6.4.27 GroundingImpedance ... 231

AVA Documents
Document Sharing Hub
Full document details: BS EN IEC 61970-301:2020

6.4.28 GroundDisconnector ... 231
6.4.29 Jumper ... 232
6.4.30 Junction ... 234
6.4.31 Line ... 234
6.4.32 LinearShuntCompensator ... 235
6.4.33 LinearShuntCompensatorPhase ... 237
6.4.34 LoadBreakSwitch ... 237
6.4.35 MutualCoupling ... 239
6.4.36 NonlinearShuntCompensator ... 240
6.4.37 NonlinearShuntCompensatorPhase ... 241
6.4.38 NonlinearShuntCompensatorPhasePoint root class ... 242
6.4.39 NonlinearShuntCompensatorPoint root class ... 243
6.4.40 PerLengthImpedance ... 243
6.4.41 PerLengthLineParameter ... 244
6.4.42 PerLengthPhaseImpedance ... 244
6.4.43 PerLengthSequenceImpedance ... 245
6.4.44 PetersenCoil ... 246
6.4.45 PetersenCoilModeKind enumeration ... 247
6.4.46 PhaseImpedanceData root class ... 247
6.4.47 PhaseShuntConnectionKind enumeration ... 248
6.4.48 PhaseTapChanger ... 249
6.4.49 PhaseTapChangerAsymmetrical ... 250
6.4.50 PhaseTapChangerLinear ... 251
6.4.51 PhaseTapChangerNonLinear ... 252
6.4.52 PhaseTapChangerSymmetrical ... 254
6.4.53 PhaseTapChangerTable ... 255
6.4.54 PhaseTapChangerTablePoint ... 255
6.4.55 PhaseTapChangerTabular ... 256
6.4.56 Plant ... 257
6.4.57 PowerElectronicsConnection ... 258
6.4.58 PowerElectronicsConnectionPhase ... 259
6.4.59 PowerTransformer ... 260
6.4.60 PowerTransformerEnd ... 262
6.4.61 ProtectedSwitch ... 264
6.4.62 RatioTapChanger ... 266
6.4.63 RatioTapChangerTable ... 267
6.4.64 RatioTapChangerTablePoint ... 267
6.4.65 ReactiveCapabilityCurve ... 268
6.4.66 Recloser ... 269
6.4.67 RegulatingCondEq ... 270
6.4.68 RegulatingControl ... 271
6.4.69 RegulatingControlModeKind enumeration ... 273
6.4.70 RegulationSchedule ... 273
6.4.71 RotatingMachine ... 274
6.4.72 Sectionaliser ... 276
6.4.73 SeriesCompensator ... 277
6.4.74 ShortCircuitRotorKind enumeration ... 278
6.4.75 ShuntCompensator ... 278
6.4.76 ShuntCompensatorPhase ... 281

AVA Documents
Document Sharing Hub
Full document details: BS EN IEC 61970-301:2020

6.4.77 SinglePhaseKind enumeration ... 281
6.4.78 StaticVarCompensator ... 282
6.4.79 SVCControlMode enumeration ... 283
6.4.80 Switch ... 283
6.4.81 SwitchPhase ... 285
6.4.82 SwitchSchedule ... 286
6.4.83 SynchronousMachine ... 287
6.4.84 SynchronousMachineOperatingMode enumeration ... 290
6.4.85 SynchronousMachineKind enumeration ... 290
6.4.86 TapChanger ... 290
6.4.87 TapChangerControl ... 292
6.4.88 TapChangerTablePoint root class ... 293
6.4.89 TapSchedule ... 294
6.4.90 TransformerControlMode enumeration ... 295
6.4.91 TransformerCoreAdmittance ... 295
6.4.92 TransformerEnd ... 296
6.4.93 TransformerMeshImpedance ... 297
6.4.94 TransformerStarImpedance ... 298
6.4.95 TransformerTank ... 299
6.4.96 TransformerTankEnd ... 299
6.4.97 VoltageControlZone ... 300
6.4.98 WireSegment ... 301
6.4.99 WireSegmentPhase ... 302
6.4.100 WindingConnection enumeration ... 303
6.5 Package LoadModel ... 303
6.5.1 General ... 303
6.5.2 ConformLoad ... 304
6.5.3 ConformLoadGroup ... 306
6.5.4 ConformLoadSchedule ... 306
6.5.5 DayType ... 307
6.5.6 EnergyArea ... 308
6.5.7 LoadArea ... 308
6.5.8 LoadGroup ... 309
6.5.9 LoadResponseCharacteristic ... 309
6.5.10 NonConformLoad ... 311
6.5.11 NonConformLoadGroup ... 312
6.5.12 NonConformLoadSchedule ... 313
6.5.13 PowerCutZone ... 314
6.5.14 Season ... 314
6.5.15 SeasonDayTypeSchedule ... 315
6.5.16 StationSupply ... 315
6.5.17 SubLoadArea ... 317
6.6 Package Generation ... 317
6.6.1 General ... 317
6.6.2 Package GenerationTrainingSimulation ... 318
6.6.3 Package Production ... 334
6.7 Package DC ... 386
6.7.1 General ... 386
6.7.2 ACDCConverter ... 391

AVA Documents
Document Sharing Hub

6.7.3 ACDCConverterDCTerminal 393
6.7.4 CsConverter 394
6.7.5 DCTopologicalNode 396
6.7.6 CsOperatingModeKind enumeration 397
6.7.7 CsPpccControlKind enumeration 397
6.7.8 DCBaseTerminal 397
6.7.9 DCBreaker 398
6.7.10 DCBusbar 399
6.7.11 DCChopper 400
6.7.12 DCConductingEquipment 401
6.7.13 DCConverterOperatingModeKind enumeration 402
6.7.14 DCConverterUnit 402
6.7.15 DCDisconnector 403
6.7.16 DCEquipmentContainer 404
6.7.17 DCGround 405
6.7.18 DCLine 406
6.7.19 DCLineSegment 407
6.7.20 DCNode 408
6.7.21 DCPolarityKind enumeration 409
6.7.22 DCSeriesDevice 409
6.7.23 DCShunt 410
6.7.24 DCSwitch 411
6.7.25 DCTerminal 412
6.7.26 DCTopologicalIsland 413
6.7.27 PerLengthDCLineParameter 413
6.7.28 VsCapabilityCurve 414
6.7.29 VsConverter 414
6.7.30 VsPpccControlKind enumeration 417
6.7.31 VsQpccControlKind enumeration 417
6.8 Package Equivalents 418
6.8.1 General 418
6.8.2 EquivalentBranch 419
6.8.3 EquivalentEquipment 422
6.8.4 EquivalentInjection 423
6.8.5 EquivalentNetwork 425
6.8.6 EquivalentShunt 426
6.9 Package AuxiliaryEquipment 427
6.9.1 General 427
6.9.2 AuxiliaryEquipment 428
6.9.3 CurrentTransformer 429
6.9.4 FaultIndicator 430
6.9.5 PostLineSensor 431
6.9.6 PotentialTransformer 432
6.9.7 PotentialTransformerKind enumeration 433
6.9.8 Sensor 434
6.9.9 SurgeArrester 435
6.9.10 WaveTrap 435
6.10 Package Meas 436
6.10.1 General 436

AVA Documents
Document Sharing Hub
Full document details: BS EN IEC 61970-301:2020

6.10.2 Accumulator ... 440
6.10.3 AccumulatorLimit ... 441
6.10.4 AccumulatorLimitSet ... 441
6.10.5 AccumulatorReset ... 442
6.10.6 AccumulatorValue ... 443
6.10.7 Analog ... 444
6.10.8 AnalogControl ... 444
6.10.9 AnalogLimit ... 445
6.10.10 AnalogLimitSet ... 446
6.10.11 AnalogValue ... 446
6.10.12 Command ... 447
6.10.13 Control ... 448
6.10.14 Discrete ... 449
6.10.15 DiscreteValue ... 450
6.10.16 IOPoint ... 451
6.10.17 Limit ... 452
6.10.18 LimitSet ... 452
6.10.19 Measurement ... 453
6.10.20 MeasurementValue ... 454
6.10.21 MeasurementValueQuality ... 455
6.10.22 MeasurementValueSource ... 456
6.10.23 Quality61850 root class ... 456
6.10.24 RaiseLowerCommand ... 457
6.10.25 SetPoint ... 458
6.10.26 StringMeasurement ... 459
6.10.27 StringMeasurementValue ... 460
6.10.28 Validity enumeration ... 460
6.10.29 ValueAliasSet ... 461
6.10.30 ValueToAlias ... 462
6.11 Package Topology ... 462
6.11.1 General ... 462
6.11.2 BusNameMarker ... 464
6.11.3 TopologicalIsland ... 464
6.11.4 TopologicalNode ... 465
6.12 Package DiagramLayout ... 466
6.12.1 General ... 466
6.12.2 Diagram ... 467
6.12.3 DiagramObject ... 468
6.12.4 DiagramObjectGluePoint root class ... 469
6.12.5 DiagramObjectPoint root class ... 470
6.12.6 DiagramObjectStyle ... 470
6.12.7 DiagramStyle ... 471
6.12.8 OrientationKind enumeration ... 471
6.12.9 TextDiagramObject ... 472
6.12.10 VisibilityLayer ... 473
6.13 Package OperationalLimits ... 473
6.13.1 General ... 473
6.13.2 ActivePowerLimit ... 475
6.13.3 ApparentPowerLimit ... 476

AVA Documents
Document Sharing Hub
Full document details: BS EN IEC 61970-301:2020

6.13.4 BranchGroup ... 476
6.13.5 BranchGroupTerminal root class ... 477
6.13.6 CurrentLimit ... 478
6.13.7 OperationalLimit ... 478
6.13.8 OperationalLimitDirectionKind enumeration ... 479
6.13.9 OperationalLimitSet ... 479
6.13.10 OperationalLimitType ... 480
6.13.11 VoltageLimit ... 481
6.14 Package ControlArea ... 481
6.14.1 General ... 481
6.14.2 AltGeneratingUnitMeas ... 483
6.14.3 AltTieMeas ... 484
6.14.4 ControlArea ... 485
6.14.5 ControlAreaGeneratingUnit ... 486
6.14.6 ControlAreaTypeKind enumeration ... 487
6.14.7 TieFlow ... 487
6.15 Package Contingency ... 488
6.15.1 General ... 488
6.15.2 Contingency ... 488
6.15.3 ContingencyElement ... 489
6.15.4 ContingencyEquipment ... 489
6.15.5 ContingencyEquipmentStatusKind enumeration ... 490
6.16 Package StateVariables ... 490
6.16.1 General ... 490
6.16.2 StateVariable root class ... 491
6.16.3 SvInjection ... 491
6.16.4 SvPowerFlow ... 492
6.16.5 SvShuntCompensatorSections ... 492
6.16.6 SvStatus ... 493
6.16.7 SvSwitch ... 493
6.16.8 SvTapStep ... 494
6.16.9 SvVoltage ... 494
6.17 Package Protection ... 495
6.17.1 General ... 495
6.17.2 CurrentRelay ... 496
6.17.3 ProtectionEquipment ... 497
6.17.4 RecloseSequence ... 498
6.17.5 SynchrocheckRelay ... 499
6.18 Package Faults ... 500
6.18.1 General ... 500
6.18.2 EquipmentFault ... 501
6.18.3 Fault ... 501
6.18.4 FaultCauseType ... 502
6.18.5 FaultImpedance compound ... 502
6.18.6 LineFault ... 503
6.18.7 PhaseConnectedFaultKind enumeration ... 503
6.19 Package SCADA ... 504
6.19.1 General ... 504
6.19.2 CommunicationLink ... 504

AVA Documents
Document Sharing Hub
Full document details: BS EN IEC 61970-301:2020

6.19.3 RemoteControl ... 506
6.19.4 RemotePoint ... 506
6.19.5 RemoteSource ... 507
6.19.6 RemoteUnit ... 508
6.19.7 RemoteUnitType enumeration ... 508
6.19.8 Source enumeration ... 509
6.20 Package ICCPConfiguration ... 509
6.20.1 General ... 509
6.20.2 ApplicationSecurityKind enumeration ... 511
6.20.3 BilateralExchangeActor ... 512
6.20.4 BilateralExchangeAgreement ... 512
6.20.5 ICCPAccessPrivilegeKind enumeration ... 513
6.20.6 ICCPInformationMessage ... 513
6.20.7 ICCPPointKind enumeration ... 514
6.20.8 ICCPProvidedPoint ... 514
6.20.9 ICCPQualityKind enumeration ... 515
6.20.10 ICCPScopeKind enumeration ... 516
6.20.11 ICCPVCC ... 516
6.20.12 ICCPVirtualControlCentre ... 517
6.20.13 IOPointSource ... 518
6.20.14 IPAccessPoint ... 519
6.20.15 IPAddressKind enumeration ... 520
6.20.16 ISOUpperLayer ... 520
6.20.17 ProvidedBilateralPoint ... 521
6.20.18 PublicX509Certificate root class ... 521
6.20.19 TASE2BilateralTable ... 522
6.20.20 TCPAccessPoint ... 523
Annex A (normative) Custom extensions ... 525
A.1 Overview ... 525
A.2 European extensions ... 525
A.2.1 General ... 525
A.2.2 Package ExtEuCore ... 525
A.2.3 Package ExtEuOperationalLimits ... 528
A.2.4 Package ExtEuGeneration ... 531
Annex B (Informative) Examples of PST transformer modelling ... 534
B.1 General ... 534
B.2 Detailed calculations and examples ... 534
B.2.1 Symmetrical phase shifters with two cores ... 534
B.2.2 Quadrature boosters ... 538
B.2.3 Asymmetrical phase shifter ... 542
Annex C (informative) Use cases HVDC representation ... 549
C.1 Overview ... 549
C.2 Back-to-back installations ... 549
C.3 Monopole with ground return ... 550
C.4 Monopole with metallic return ... 551
C.5 Voltage source converter ... 552
Bibliography ... 554

Documents
Document Sharing Hub
Full document details: BS EN IEC 61970-301:2020

Figure 1 – Defined dependencies between CIM packages and packages' versions information 42
Figure 2 – CIM IEC 61970-301 package diagram 43
Figure 3 – Example of generalization 45
Figure 4 – Example of simple association 46
Figure 5 – Example of aggregation 46
Figure 6 – Equipment containers 48
Figure 7 – Names 49
Figure 8 – Connectivity model 50
Figure 9 – Simple network example 51
Figure 10 – Simple network connectivity modelled with CIM Topology 52
Figure 11 – Equipment inheritance hierarchy 53
Figure 12 – Transformer and Tank model 54
Figure 13 – Transformer model 56
Figure 14 – Transformer tap model 57
Figure 15 – Phasor diagram and equations 60
Figure 16 – Symmetrical phase shifter impedance variation 61
Figure 17 – Core organization 62
Figure 18 – Phasor diagram and equations 62
Figure 19 – Core organization 63
Figure 20 – Phasor diagram and equations 64
Figure 21 – Core organization 65
Figure 22 – Phasor diagram and equations 65
Figure 23 – Phasor diagrams and equations 67
Figure 24 – Core organization 68
Figure 25 – Phase wire data model 70
Figure 26 – Phase connectivity 71
Figure 27 – Grounding device data model 73
Figure 28 – Station including Petersen coils drawing example 74
Figure 29 – Instance diagram objects with one terminal coil 75
Figure 30 – Cuts, clamps, and jumpers UML model 76
Figure 31 – Example before cuts and jumpers are applied 77
Figure 32 – Example after cuts and jumpers are applied 78
Figure 33 – Example of jumper without cut or clamp 79
Figure 34 – Navigating from PSR to MeasurementValue 81
Figure 35 – Measurement placement 84
Figure 36 – Regulating control models 85
Figure 37 – Simplified example of HVDC model representation 87
Figure 38 – Detailed example of HVDC model representation with fictitious HVDC substations 88
Figure 39 – Detailed example of HVDC model representation with no fictitious HVDC substations 89
Figure 40 – HVDC bi-polar link from IEC 60633 90
Figure 41 – A point-to-point VSC transmission scheme 90

AVA Documents
Document Sharing Hub

Figure 42 – HVDC power flow model 91
Figure 43 – Detailed HVDC power flow model 92
Figure 44 – Current Source Converter power flow 92
Figure 45 – Voltage Source Converter power flow 93
Figure 46 – Power flow cases 94
Figure 47 – VSC transmission with a symmetrical monopole illustrated with capacitive earthing on the DC side (IEC 62747) 95
Figure 48 – VSC P-Q capability curve 95
Figure 49 – Bipolar VSC transmission with earth return (IEC 62747) 96
Figure 50 – Object instances for a bi-polar current source HVDC line 97
Figure 51 – Object instances for symmetric monopole VSC HVDC data model 98
Figure 52 – Containment structure for a bipolar HVDC line 99
Figure 53 – Containment structure for a bipolar back-to-back HVDC station 100
Figure 54 – The Basic topology in package Core 101
Figure 55 – DC and AC topology 102
Figure 56 – Equipment model 103
Figure 57 – HVDC line model 104
Figure 58 – Legend 105
Figure 59 – Simple monopole with measurements 105
Figure 60 – Simple bipolar 106
Figure 61 – Monopole one side with detailed model 106
Figure 62 – V-I Characteristic of SVC 107
Figure 63 – ICCP measurements and network models 109
Figure 64 – ICCP configuration and start up 109
Figure 65 – Measurement value provider and consumer example 110
Figure 66 – Generalized bilateral exchange agreement data model 112
Figure 67 – ICCP bilateral exchange agreement data model 114
Figure 68 – Feeder data model 115
Figure 69 – Orientation of the Terminal flow 116
Figure 70 – Several ways to describe control area ties 117
Figure 71 – CIM top level packages 121
Figure 72 – Class diagram Domain::CombinedElectricalDatatypes 123
Figure 73 – Class diagram Domain::BasicDatatypes 123
Figure 74 – Class diagram Domain::ElectricityDatatypes 124
Figure 75 – Class diagram Domain::EnumeratedUnitDatatypes 125
Figure 76 – Class diagram Domain::GeneralDatatypes 126
Figure 77 – Class diagram Domain::MonetaryDatatypes 127
Figure 78 – Class diagram Domain::TimeDatatypes 128
Figure 79 – Class diagram Core::Main 156
Figure 80 – Class diagram Core::Names 157
Figure 81 – Class diagram Core::CurveSchedule 157
Figure 82 – Class diagram Core::Datatypes 158
Figure 83 – Class diagram Core::FeederContainment 159

AVA Documents
Document Sharing Hub

Figure 84 – Class diagram Core::Reporting 159
Figure 85 – Class diagram Core::OperatingShare 160
Figure 86 – Class diagram Wires::CutsAndJumpers 187
Figure 87 – Class diagram Wires::Datatypes 188
Figure 88 – Class diagram Wires::EarthFaultCompensator 189
Figure 89 – Class diagram Wires::InheritanceHierarchy 190
Figure 90 – Class diagram Wires::LineModel 191
Figure 91 – Class diagram Wires::MutualCoupling 192
Figure 92 – Class diagram Wires::NamingHierarchyPart1 193
Figure 93 – Class diagram Wires::NamingHierarchyPart2 194
Figure 94 – Class diagram Wires::RegulatingEquipment 195
Figure 95 – Class diagram Wires::Schedules 196
Figure 96 – Class diagram Wires::ShuntCompensator 196
Figure 97 – Class diagram Wires::SwitchingEquipment 197
Figure 98 – Class diagram Wires::TapChanger 198
Figure 99 – Class diagram Wires::VoltageControl 199
Figure 100 – Class diagram Wires::WiresPhaseModel 200
Figure 101 – Class diagram Wires::Transformer 201
Figure 102 – Class diagram LoadModel::Main 304
Figure 103 – Class diagram Generation::Main 318
Figure 104 – Class diagram GenerationTrainingSimulation::Main 318
Figure 105 – Class diagram GenerationTrainingSimulation::Datatypes 319
Figure 106 – Class diagram Production::PowerElectronics 334
Figure 107 – Class diagram Production::Nuclear 335
Figure 108 – Class diagram Production::Main 336
Figure 109 – Class diagram Production::Datatypes 337
Figure 110 – Class diagram Production::Hydro 338
Figure 111 – Class diagram Production::Thermal 339
Figure 112 – Class diagram DC::DCContainment 386
Figure 113 – Class diagram DC::DCEquipment 387
Figure 114 – Class diagram DC::DCLineModel 388
Figure 115 – Class diagram DC::ACDCConverter 389
Figure 116 – Class diagram DC::ACDCConnectivityModel 390
Figure 117 – Class diagram Equivalents::Main 419
Figure 118 – Class diagram AuxiliaryEquipment::AuxiliaryEquipment 428
Figure 119 – Class diagram Meas::Control 437
Figure 120 – Class diagram Meas::Datatypes 437
Figure 121 – Class diagram Meas::Measurement 438
Figure 122 – Class diagram Meas::MeasurementInheritance 439
Figure 123 – Class diagram Meas::Quality 440
Figure 124 – Class diagram Topology::Main 463
Figure 125 – Class diagram Topology::TopologyReporting 463
Figure 126 – Class diagram DiagramLayout::DiagramLayout 467

AVA Documents
Document Sharing Hub
Full document details: BS EN IEC 61970-301:2020

Figure 127 – Class diagram OperationalLimits::OperationalLimits 474
Figure 128 – Class diagram OperationalLimits::BranchGroup 475
Figure 129 – Class diagram ControlArea::ControlArea 482
Figure 130 – Class diagram ControlArea::ControlAreaInheritance 483
Figure 131 – Class diagram ControlArea::Datatypes 483
Figure 132 – Class diagram Contingency::Contingency 488
Figure 133 – Class diagram StateVariables::StateVariables 491
Figure 134 – Class diagram Protection::Main 495
Figure 135 – Class diagram Faults::Faults 500
Figure 136 – Class diagram SCADA::Datatypes 504
Figure 137 – Class diagram SCADA::Main 505
Figure 138 – Class diagram ICCPConfiguration::GenericBilateralExchange 510
Figure 139 – Class diagram ICCPConfiguration::ICCP 511
Figure A.1 – Class diagram ExtEuBase::ExtEuBase 525
Figure A.2 – Class diagram ExtEuCore::ExtEuCore 526
Figure A.3 – Class diagram ExtEuOperationalLimits::ExtEuOperationalLimits 529
Figure A.4 – Class diagram ExtEuProduction::ExtEuProduction 531
Figure B.1 – Symmetrical phase shifters with two cores 534
Figure B.2 – Detailed three phase diagram 535
Figure B.3 – Detailed three phase diagram 538
Figure B.4 – Single phase diagram 539
Figure B.5 – Phasor diagram 540
Figure B.6 – Detailed three phase diagram 541
Figure B.7 – Phasor diagram 542
Figure B.8 – Asymmetrical phase shifter with two cores 542
Figure B.9 – Detailed three phase diagram 543
Figure B.10 – Phasor diagram 544
Figure B.11 – Asymmetrical phase shifter with a single core 545
Figure B.12 – Phasor diagram 546
Figure B.13 – Example of detailed three-phase diagram of voltage regulating auto-transformer and quadrature booster 547
Figure B.14 – Example of detailed winding diagram of voltage regulating auto-transformer and quadrature booster 548
Figure C.1 – Representation of a 12-p back-to-back installation 550
Figure C.2 – Representation of a 12-p monopole installation with ground return 551
Figure C.3 – Representation of a 12-p monopole installation with metallic return 552
Figure C.4 – Representation of a voltage source converter 553

Table 1 – Mapping of phase shift transformers to CIM classes 58
Table 2 – Mapping of symbols used in formulas to CIM attributes 59
Table 3 – Impedance variations in a phase shift transformer 59
Table 4 – Description of variables 60
Table 5 – Tap changer control options 69
Table 6 – measurementType naming conventions 82

AVA Documents
Document Sharing Hub

Table 7 – MeasurementValueSource naming conventions 83
Table 8 – Attributes of Package1::Class1 121
Table 9 – Association ends of Package1::Class1 with other classes 122
Table 10 – Literals of Package1::Enumeration1 122
Table 11 – Attributes of Domain::ActivePower 128
Table 12 – Attributes of Domain::ActivePowerChangeRate 129
Table 13 – Attributes of Domain::ActivePowerPerCurrentFlow 129
Table 14 – Attributes of Domain::ActivePowerPerFrequency 129
Table 15 – Attributes of Domain::Admittance 129
Table 16 – Attributes of Domain::AngleDegrees 130
Table 17 – Attributes of Domain::AngleRadians 130
Table 18 – Attributes of Domain::ApparentPower 130
Table 19 – Attributes of Domain::Area 130
Table 20 – Attributes of Domain::Capacitance 131
Table 21 – Attributes of Domain::CapacitancePerLength 131
Table 22 – Attributes of Domain::Classification 131
Table 23 – Attributes of Domain::Conductance 132
Table 24 – Attributes of Domain::ConductancePerLength 132
Table 25 – Attributes of Domain::CostPerEnergyUnit 132
Table 26 – Attributes of Domain::CostPerHeatUnit 132
Table 27 – Attributes of Domain::CostPerVolume 133
Table 28 – Attributes of Domain::CostRate 133
Table 29 – Literals of Domain::Currency 133
Table 30 – Attributes of Domain::CurrentFlow 137
Table 31 – Attributes of Domain::Damping 137
Table 32 – Attributes of Domain::DateInterval 138
Table 33 – Attributes of Domain::DateTimeInterval 138
Table 34 – Attributes of Domain::DecimalQuantity 138
Table 35 – Attributes of Domain::Displacement 139
Table 36 – Attributes of Domain::Emission 139
Table 37 – Attributes of Domain::FloatQuantity 139
Table 38 – Attributes of Domain::Frequency 140
Table 39 – Attributes of Domain::HeatRate 140
Table 40 – Attributes of Domain::Hours 140
Table 41 – Attributes of Domain::Impedance 140
Table 42 – Attributes of Domain::Inductance 141
Table 43 – Attributes of Domain::InductancePerLength 141
Table 44 – Attributes of Domain::IntegerQuantity 141
Table 45 – Attributes of Domain::KiloActivePower 141
Table 46 – Attributes of Domain::Length 142
Table 47 – Attributes of Domain::Mass 142
Table 48 – Attributes of Domain::Minutes 142
Table 49 – Attributes of Domain::Money 142

AVA Documents
Document Sharing Hub

Table 50 – Attributes of Domain::MonthDayInterval ... 143
Table 51 – Attributes of Domain::PU ... 143
Table 52 – Attributes of Domain::PerCent ... 143
Table 53 – Attributes of Domain::Pressure ... 144
Table 54 – Attributes of Domain::Reactance ... 144
Table 55 – Attributes of Domain::ReactancePerLength ... 144
Table 56 – Attributes of Domain::ReactivePower ... 144
Table 57 – Attributes of Domain::RealEnergy ... 145
Table 58 – Attributes of Domain::Resistance ... 145
Table 59 – Attributes of Domain::ResistancePerLength ... 145
Table 60 – Attributes of Domain::RotationSpeed ... 145
Table 61 – Attributes of Domain::Seconds ... 146
Table 62 – Attributes of Domain::Speed ... 146
Table 63 – Attributes of Domain::StringQuantity ... 146
Table 64 – Attributes of Domain::Susceptance ... 147
Table 65 – Attributes of Domain::SusceptancePerLength ... 147
Table 66 – Attributes of Domain::Temperature ... 147
Table 67 – Attributes of Domain::TimeInterval ... 147
Table 68 – Literals of Domain::UnitMultiplier ... 148
Table 69 – Literals of Domain::UnitSymbol ... 149
Table 70 – Attributes of Domain::Voltage ... 154
Table 71 – Attributes of Domain::VoltagePerReactivePower ... 154
Table 72 – Attributes of Domain::Volume ... 154
Table 73 – Attributes of Domain::VolumeFlowRate ... 155
Table 74 – Attributes of Domain::WaterLevel ... 155
Table 75 – Attributes of Core::ACDCTerminal ... 160
Table 76 – Association ends of Core::ACDCTerminal with other classes ... 161
Table 77 – Attributes of Core::BaseFrequency ... 161
Table 78 – Association ends of Core::BaseFrequency with other classes ... 162
Table 79 – Attributes of Core::BasePower ... 162
Table 80 – Association ends of Core::BasePower with other classes ... 162
Table 81 – Attributes of Core::BaseVoltage ... 162
Table 82 – Association ends of Core::BaseVoltage with other classes ... 163
Table 83 – Attributes of Core::BasicIntervalSchedule ... 163
Table 84 – Association ends of Core::BasicIntervalSchedule with other classes ... 163
Table 85 – Attributes of Core::Bay ... 164
Table 86 – Association ends of Core::Bay with other classes ... 164
Table 87 – Literals of Core::BreakerConfiguration ... 165
Table 88 – Literals of Core::BusbarConfiguration ... 165
Table 89 – Attributes of Core::ConductingEquipment ... 165
Table 90 – Association ends of Core::ConductingEquipment with other classes ... 166
Table 91 – Attributes of Core::ConnectivityNode ... 166
Table 92 – Association ends of Core::ConnectivityNode with other classes ... 167

AVA Documents
Document Sharing Hub
Full document details: BS EN IEC 61970-301:2020

Table 93 – Attributes of Core::ConnectivityNodeContainer 167
Table 94 – Association ends of Core::ConnectivityNodeContainer with other classes 167
Table 95 – Attributes of Core::Curve 168
Table 96 – Association ends of Core::Curve with other classes 168
Table 97 – Attributes of Core::CurveData 168
Table 98 – Association ends of Core::CurveData with other classes 169
Table 99 – Literals of Core::CurveStyle 169
Table 100 – Attributes of Core::Equipment 169
Table 101 – Association ends of Core::Equipment with other classes 170
Table 102 – Attributes of Core::EquipmentContainer 170
Table 103 – Association ends of Core::EquipmentContainer with other classes 171
Table 104 – Attributes of Core::Feeder 171
Table 105 – Association ends of Core::Feeder with other classes 172
Table 106 – Attributes of Core::GeographicalRegion 172
Table 107 – Association ends of Core::GeographicalRegion with other classes 173
Table 108 – Attributes of Core::IdentifiedObject 173
Table 109 – Association ends of Core::IdentifiedObject with other classes 173
Table 110 – Attributes of Core::IrregularIntervalSchedule 174
Table 111 – Association ends of Core::IrregularIntervalSchedule with other classes 174
Table 112 – Attributes of Core::IrregularTimePoint 174
Table 113 – Association ends of Core::IrregularTimePoint with other classes 175
Table 114 – Attributes of Core::Name 175
Table 115 – Association ends of Core::Name with other classes 175
Table 116 – Attributes of Core::NameType 175
Table 117 – Association ends of Core::NameType with other classes 176
Table 118 – Attributes of Core::NameTypeAuthority 176
Table 119 – Association ends of Core::NameTypeAuthority with other classes 176
Table 120 – Attributes of Core::OperatingParticipant 176
Table 121 – Association ends of Core::OperatingParticipant with other classes 177
Table 122 – Attributes of Core::OperatingShare 177
Table 123 – Association ends of Core::OperatingShare with other classes 177
Table 124 – Attributes of Core::PSRType 177
Table 125 – Association ends of Core::PSRType with other classes 178
Table 126 – Literals of Core::PhaseCode 178
Table 127 – Attributes of Core::PowerSystemResource 179
Table 128 – Association ends of Core::PowerSystemResource with other classes 179
Table 129 – Attributes of Core::RegularIntervalSchedule 180
Table 130 – Association ends of Core::RegularIntervalSchedule with other classes 180
Table 131 – Attributes of Core::RegularTimePoint 180
Table 132 – Association ends of Core::RegularTimePoint with other classes 181
Table 133 – Attributes of Core::ReportingGroup 181
Table 134 – Association ends of Core::ReportingGroup with other classes 181
Table 135 – Attributes of Core::ReportingSuperGroup 182

AVA Documents
Document Sharing Hub

Table 136 – Association ends of Core::ReportingSuperGroup with other classes 182
Table 137 – Attributes of Core::SubGeographicalRegion 182
Table 138 – Association ends of Core::SubGeographicalRegion with other classes 182
Table 139 – Attributes of Core::Substation 183
Table 140 – Association ends of Core::Substation with other classes 183
Table 141 – Attributes of Core::Terminal 184
Table 142 – Association ends of Core::Terminal with other classes 184
Table 143 – Attributes of Core::VoltageLevel 185
Table 144 – Association ends of Core::VoltageLevel with other classes 186
Table 145 – Literals of Wires::AsynchronousMachineKind 202
Table 146 – Attributes of Wires::ACLineSegment 202
Table 147 – Association ends of Wires::ACLineSegment with other classes 203
Table 148 – Attributes of Wires::ACLineSegmentPhase 204
Table 149 – Association ends of Wires::ACLineSegmentPhase with other classes 204
Table 150 – Attributes of Wires::AsynchronousMachine 205
Table 151 – Association ends of Wires::AsynchronousMachine with other classes 206
Table 152 – Attributes of Wires::Breaker 207
Table 153 – Association ends of Wires::Breaker with other classes 207
Table 154 – Attributes of Wires::BusbarSection 208
Table 155 – Association ends of Wires::BusbarSection with other classes 208
Table 156 – Attributes of Wires::Clamp 209
Table 157 – Association ends of Wires::Clamp with other classes 210
Table 158 – Attributes of Wires::CompositeSwitch 210
Table 159 – Association ends of Wires::CompositeSwitch with other classes 211
Table 160 – Attributes of Wires::Conductor 211
Table 161 – Association ends of Wires::Conductor with other classes 212
Table 162 – Attributes of Wires::Connector 212
Table 163 – Association ends of Wires::Connector with other classes 213
Table 164 – Literals of Wires::CoolantType 213
Table 165 – Attributes of Wires::Cut 214
Table 166 – Association ends of Wires::Cut with other classes 214
Table 167 – Attributes of Wires::Disconnector 215
Table 168 – Association ends of Wires::Disconnector with other classes 215
Table 169 – Attributes of Wires::DisconnectingCircuitBreaker 216
Table 170 – Association ends of Wires::DisconnectingCircuitBreaker with other classes 217
Table 171 – Attributes of Wires::EarthFaultCompensator 217
Table 172 – Association ends of Wires::EarthFaultCompensator with other classes 218
Table 173 – Attributes of Wires::EnergyConnection 218
Table 174 – Association ends of Wires::EnergyConnection with other classes 219
Table 175 – Attributes of Wires::EnergyConsumer 219
Table 176 – Association ends of Wires::EnergyConsumer with other classes 220
Table 177 – Attributes of Wires::EnergyConsumerPhase 221
Table 178 – Association ends of Wires::EnergyConsumerPhase with other classes 222

AVA Documents
Document Sharing Hub
Full document details: BS EN IEC 61970-301:2020

Table 179 – Attributes of Wires::EnergySchedulingType 222
Table 180 – Association ends of Wires::EnergySchedulingType with other classes 222
Table 181 – Attributes of Wires::EnergySource 223
Table 182 – Association ends of Wires::EnergySource with other classes 224
Table 183 – Attributes of Wires::EnergySourcePhase 224
Table 184 – Association ends of Wires::EnergySourcePhase with other classes 225
Table 185 – Attributes of Wires::ExternalNetworkInjection 225
Table 186 – Association ends of Wires::ExternalNetworkInjection with other classes 226
Table 187 – Attributes of Wires::FrequencyConverter 227
Table 188 – Association ends of Wires::FrequencyConverter with other classes 228
Table 189 – Attributes of Wires::Fuse 228
Table 190 – Association ends of Wires::Fuse with other classes 229
Table 191 – Attributes of Wires::Ground 229
Table 192 – Association ends of Wires::Ground with other classes 230
Table 193 – Attributes of Wires::GroundingImpedance 230
Table 194 – Association ends of Wires::GroundingImpedance with other classes 231
Table 195 – Attributes of Wires::GroundDisconnector 231
Table 196 – Association ends of Wires::GroundDisconnector with other classes 232
Table 197 – Attributes of Wires::Jumper 233
Table 198 – Association ends of Wires::Jumper with other classes 233
Table 199 – Attributes of Wires::Junction 234
Table 200 – Association ends of Wires::Junction with other classes 234
Table 201 – Attributes of Wires::Line 235
Table 202 – Association ends of Wires::Line with other classes 235
Table 203 – Attributes of Wires::LinearShuntCompensator 235
Table 204 – Association ends of Wires::LinearShuntCompensator with other classes 236
Table 205 – Attributes of Wires::LinearShuntCompensatorPhase 237
Table 206 – Association ends of Wires::LinearShuntCompensatorPhase with other classes 237
Table 207 – Attributes of Wires::LoadBreakSwitch 238
Table 208 – Association ends of Wires::LoadBreakSwitch with other classes 238
Table 209 – Attributes of Wires::MutualCoupling 239
Table 210 – Association ends of Wires::MutualCoupling with other classes 240
Table 211 – Attributes of Wires::NonlinearShuntCompensator 240
Table 212 – Association ends of Wires::NonlinearShuntCompensator with other classes 241
Table 213 – Attributes of Wires::NonlinearShuntCompensatorPhase 241
Table 214 – Association ends of Wires::NonlinearShuntCompensatorPhase with other classes 242
Table 215 – Attributes of Wires::NonlinearShuntCompensatorPhasePoint 242
Table 216 – Association ends of Wires::NonlinearShuntCompensatorPhasePoint with other classes 242
Table 217 – Attributes of Wires::NonlinearShuntCompensatorPoint 243
Table 218 – Association ends of Wires::NonlinearShuntCompensatorPoint with other classes 243

AVA Documents
Document Sharing Hub

Table 219 – Attributes of Wires::PerLengthImpedance 243
Table 220 – Association ends of Wires::PerLengthImpedance with other classes 244
Table 221 – Attributes of Wires::PerLengthLineParameter 244
Table 222 – Association ends of Wires::PerLengthLineParameter with other classes 244
Table 223 – Attributes of Wires::PerLengthPhaseImpedance 244
Table 224 – Association ends of Wires::PerLengthPhaseImpedance with other classes 245
Table 225 – Attributes of Wires::PerLengthSequenceImpedance 245
Table 226 – Association ends of Wires::PerLengthSequenceImpedance with other classes 246
Table 227 – Attributes of Wires::PetersenCoil 246
Table 228 – Association ends of Wires::PetersenCoil with other classes 247
Table 229 – Literals of Wires::PetersenCoilModeKind 247
Table 230 – Attributes of Wires::PhaseImpedanceData 248
Table 231 – Association ends of Wires::PhaseImpedanceData with other classes 248
Table 232 – Literals of Wires::PhaseShuntConnectionKind 248
Table 233 – Attributes of Wires::PhaseTapChanger 249
Table 234 – Association ends of Wires::PhaseTapChanger with other classes 249
Table 235 – Attributes of Wires::PhaseTapChangerAsymmetrical 250
Table 236 – Association ends of Wires::PhaseTapChangerAsymmetrical with other classes 251
Table 237 – Attributes of Wires::PhaseTapChangerLinear 251
Table 238 – Association ends of Wires::PhaseTapChangerLinear with other classes 252
Table 239 – Attributes of Wires::PhaseTapChangerNonLinear 253
Table 240 – Association ends of Wires::PhaseTapChangerNonLinear with other classes 253
Table 241 – Attributes of Wires::PhaseTapChangerSymmetrical 254
Table 242 – Association ends of Wires::PhaseTapChangerSymmetrical with other classes 255
Table 243 – Attributes of Wires::PhaseTapChangerTable 255
Table 244 – Association ends of Wires::PhaseTapChangerTable with other classes 255
Table 245 – Attributes of Wires::PhaseTapChangerTablePoint 256
Table 246 – Association ends of Wires::PhaseTapChangerTablePoint with other classes 256
Table 247 – Attributes of Wires::PhaseTapChangerTabular 256
Table 248 – Association ends of Wires::PhaseTapChangerTabular with other classes 257
Table 249 – Attributes of Wires::Plant 257
Table 250 – Association ends of Wires::Plant with other classes 257
Table 251 – Attributes of Wires::PowerElectronicsConnection 258
Table 252 – Association ends of Wires::PowerElectronicsConnection with other classes 259
Table 253 – Attributes of Wires::PowerElectronicsConnectionPhase 260
Table 254 – Association ends of Wires::PowerElectronicsConnectionPhase with other classes 260
Table 255 – Attributes of Wires::PowerTransformer 261
Table 256 – Association ends of Wires::PowerTransformer with other classes 262

AVA Documents
Document Sharing Hub
Full document details: BS EN IEC 61970-301:2020

Table 257 – Attributes of Wires::PowerTransformerEnd 263
Table 258 – Association ends of Wires::PowerTransformerEnd with other classes 264
Table 259 – Attributes of Wires::ProtectedSwitch 265
Table 260 – Association ends of Wires::ProtectedSwitch with other classes 265
Table 261 – Attributes of Wires::RatioTapChanger 266
Table 262 – Association ends of Wires::RatioTapChanger with other classes 267
Table 263 – Attributes of Wires::RatioTapChangerTable 267
Table 264 – Association ends of Wires::RatioTapChangerTable with other classes 267
Table 265 – Attributes of Wires::RatioTapChangerTablePoint 268
Table 266 – Association ends of Wires::RatioTapChangerTablePoint with other classes 268
Table 267 – Attributes of Wires::ReactiveCapabilityCurve 268
Table 268 – Association ends of Wires::ReactiveCapabilityCurve with other classes 269
Table 269 – Attributes of Wires::Recloser 269
Table 270 – Association ends of Wires::Recloser with other classes 270
Table 271 – Attributes of Wires::RegulatingCondEq 270
Table 272 – Association ends of Wires::RegulatingCondEq with other classes 271
Table 273 – Attributes of Wires::RegulatingControl 272
Table 274 – Association ends of Wires::RegulatingControl with other classes 273
Table 275 – Literals of Wires::RegulatingControlModeKind 273
Table 276 – Attributes of Wires::RegulationSchedule 274
Table 277 – Association ends of Wires::RegulationSchedule with other classes 274
Table 278 – Attributes of Wires::RotatingMachine 274
Table 279 – Association ends of Wires::RotatingMachine with other classes 275
Table 280 – Attributes of Wires::Sectionaliser 276
Table 281 – Association ends of Wires::Sectionaliser with other classes 276
Table 282 – Attributes of Wires::SeriesCompensator 277
Table 283 – Association ends of Wires::SeriesCompensator with other classes 278
Table 284 – Literals of Wires::ShortCircuitRotorKind 278
Table 285 – Attributes of Wires::ShuntCompensator 279
Table 286 – Association ends of Wires::ShuntCompensator with other classes 280
Table 287 – Attributes of Wires::ShuntCompensatorPhase 280
Table 288 – Association ends of Wires::ShuntCompensatorPhase with other classes 281
Table 289 – Literals of Wires::SinglePhaseKind 282
Table 290 – Attributes of Wires::StaticVarCompensator 282
Table 291 – Association ends of Wires::StaticVarCompensator with other classes 283
Table 292 – Literals of Wires::SVCControlMode 283
Table 293 – Attributes of Wires::Switch 284
Table 294 – Association ends of Wires::Switch with other classes 285
Table 295 – Attributes of Wires::SwitchPhase 285
Table 296 – Association ends of Wires::SwitchPhase with other classes 286
Table 297 – Attributes of Wires::SwitchSchedule 286
Table 298 – Association ends of Wires::SwitchSchedule with other classes 287
Table 299 – Attributes of Wires::SynchronousMachine 287

AVA Documents
Document Sharing Hub
Full document details: BS EN IEC 61970-301:2020

Table 300 – Association ends of Wires::SynchronousMachine with other classes 289
Table 301 – Literals of Wires::SynchronousMachineOperatingMode 290
Table 302 – Literals of Wires::SynchronousMachineKind 290
Table 303 – Attributes of Wires::TapChanger 291
Table 304 – Association ends of Wires::TapChanger with other classes 292
Table 305 – Attributes of Wires::TapChangerControl 292
Table 306 – Association ends of Wires::TapChangerControl with other classes 293
Table 307 – Attributes of Wires::TapChangerTablePoint 293
Table 308 – Attributes of Wires::TapSchedule 294
Table 309 – Association ends of Wires::TapSchedule with other classes 295
Table 310 – Literals of Wires::TransformerControlMode 295
Table 311 – Attributes of Wires::TransformerCoreAdmittance 295
Table 312 – Association ends of Wires::TransformerCoreAdmittance with other classes 296
Table 313 – Attributes of Wires::TransformerEnd 296
Table 314 – Association ends of Wires::TransformerEnd with other classes 297
Table 315 – Attributes of Wires::TransformerMeshImpedance 297
Table 316 – Association ends of Wires::TransformerMeshImpedance with other classes 298
Table 317 – Attributes of Wires::TransformerStarImpedance 298
Table 318 – Association ends of Wires::TransformerStarImpedance with other classes 298
Table 319 – Attributes of Wires::TransformerTank 299
Table 320 – Association ends of Wires::TransformerTank with other classes 299
Table 321 – Attributes of Wires::TransformerTankEnd 300
Table 322 – Association ends of Wires::TransformerTankEnd with other classes 300
Table 323 – Attributes of Wires::VoltageControlZone 301
Table 324 – Association ends of Wires::VoltageControlZone with other classes 301
Table 325 – Attributes of Wires::WireSegment 301
Table 326 – Association ends of Wires::WireSegment with other classes 302
Table 327 – Attributes of Wires::WireSegmentPhase 302
Table 328 – Association ends of Wires::WireSegmentPhase with other classes 303
Table 329 – Literals of Wires::WindingConnection 303
Table 330 – Attributes of LoadModel::ConformLoad 305
Table 331 – Association ends of LoadModel::ConformLoad with other classes 305
Table 332 – Attributes of LoadModel::ConformLoadGroup 306
Table 333 – Association ends of LoadModel::ConformLoadGroup with other classes 306
Table 334 – Attributes of LoadModel::ConformLoadSchedule 307
Table 335 – Association ends of LoadModel::ConformLoadSchedule with other classes 307
Table 336 – Attributes of LoadModel::DayType 307
Table 337 – Association ends of LoadModel::DayType with other classes 308
Table 338 – Attributes of LoadModel::EnergyArea 308
Table 339 – Association ends of LoadModel::EnergyArea with other classes 308
Table 340 – Attributes of LoadModel::LoadArea 308
Table 341 – Association ends of LoadModel::LoadArea with other classes 309
Table 342 – Attributes of LoadModel::LoadGroup 309

AVA Documents
Document Sharing Hub
Full document details: BS EN IEC 61970-301:2020

Table 343 – Association ends of LoadModel::LoadGroup with other classes 309
Table 344 – Attributes of LoadModel::LoadResponseCharacteristic 310
Table 345 – Association ends of LoadModel::LoadResponseCharacteristic with other classes 311
Table 346 – Attributes of LoadModel::NonConformLoad 311
Table 347 – Association ends of LoadModel::NonConformLoad with other classes 312
Table 348 – Attributes of LoadModel::NonConformLoadGroup 312
Table 349 – Association ends of LoadModel::NonConformLoadGroup with other classes 313
Table 350 – Attributes of LoadModel::NonConformLoadSchedule 313
Table 351 – Association ends of LoadModel::NonConformLoadSchedule with other classes 313
Table 352 – Attributes of LoadModel::PowerCutZone 314
Table 353 – Association ends of LoadModel::PowerCutZone with other classes 314
Table 354 – Attributes of LoadModel::Season 314
Table 355 – Association ends of LoadModel::Season with other classes 315
Table 356 – Attributes of LoadModel::SeasonDayTypeSchedule 315
Table 357 – Association ends of LoadModel::SeasonDayTypeSchedule with other classes 315
Table 358 – Attributes of LoadModel::StationSupply 316
Table 359 – Association ends of LoadModel::StationSupply with other classes 316
Table 360 – Attributes of LoadModel::SubLoadArea 317
Table 361 – Association ends of LoadModel::SubLoadArea with other classes 317
Table 362 – Attributes of GenerationTrainingSimulation::BWRSteamSupply 319
Table 363 – Association ends of GenerationTrainingSimulation::BWRSteamSupply with other classes 320
Table 364 – Literals of GenerationTrainingSimulation::BoilerControlMode 320
Table 365 – Attributes of GenerationTrainingSimulation::CTTempActivePowerCurve 321
Table 366 – Association ends of GenerationTrainingSimulation::CTTempActivePowerCurve with other classes 321
Table 367 – Attributes of GenerationTrainingSimulation::CombustionTurbine 321
Table 368 – Association ends of GenerationTrainingSimulation::CombustionTurbine with other classes 322
Table 369 – Attributes of GenerationTrainingSimulation::DrumBoiler 323
Table 370 – Association ends of GenerationTrainingSimulation::DrumBoiler with other classes 324
Table 371 – Attributes of GenerationTrainingSimulation::FossilSteamSupply 324
Table 372 – Association ends of GenerationTrainingSimulation::FossilSteamSupply with other classes 325
Table 373 – Attributes of GenerationTrainingSimulation::HeatRecoveryBoiler 325
Table 374 – Association ends of GenerationTrainingSimulation::HeatRecoveryBoiler with other classes 326
Table 375 – Attributes of GenerationTrainingSimulation::HydroTurbine 327
Table 376 – Association ends of GenerationTrainingSimulation::HydroTurbine with other classes 327
Table 377 – Attributes of GenerationTrainingSimulation::PWRSteamSupply 328

AVA Documents
Document Sharing Hub

Table 378 – Association ends of GenerationTrainingSimulation::PWRSteamSupply with other classes ... 328
Table 379 – Attributes of GenerationTrainingSimulation::PrimeMover ... 329
Table 380 – Association ends of GenerationTrainingSimulation::PrimeMover with other classes ... 329
Table 381 – Attributes of GenerationTrainingSimulation::SteamSupply ... 329
Table 382 – Association ends of GenerationTrainingSimulation::SteamSupply with other classes ... 330
Table 383 – Attributes of GenerationTrainingSimulation::SteamTurbine ... 330
Table 384 – Association ends of GenerationTrainingSimulation::SteamTurbine with other classes ... 331
Table 385 – Attributes of GenerationTrainingSimulation::Subcritical ... 331
Table 386 – Association ends of GenerationTrainingSimulation::Subcritical with other classes ... 332
Table 387 – Attributes of GenerationTrainingSimulation::Supercritical ... 332
Table 388 – Association ends of GenerationTrainingSimulation::Supercritical with other classes ... 333
Table 389 – Literals of GenerationTrainingSimulation::HydroTurbineKind ... 334
Table 390 – Attributes of Production::AirCompressor ... 339
Table 391 – Association ends of Production::AirCompressor with other classes ... 340
Table 392 – Literals of Production::BatteryStateKind ... 340
Table 393 – Attributes of Production::BatteryUnit ... 340
Table 394 – Association ends of Production::BatteryUnit with other classes ... 341
Table 395 – Attributes of Production::CAESPlant ... 341
Table 396 – Association ends of Production::CAESPlant with other classes ... 342
Table 397 – Attributes of Production::CogenerationPlant ... 342
Table 398 – Association ends of Production::CogenerationPlant with other classes ... 343
Table 399 – Attributes of Production::CombinedCyclePlant ... 343
Table 400 – Association ends of Production::CombinedCyclePlant with other classes ... 343
Table 401 – Attributes of Production::EmissionAccount ... 344
Table 402 – Association ends of Production::EmissionAccount with other classes ... 344
Table 403 – Attributes of Production::EmissionCurve ... 345
Table 404 – Association ends of Production::EmissionCurve with other classes ... 345
Table 405 – Literals of Production::EmissionType ... 346
Table 406 – Literals of Production::WindGenUnitKind ... 346
Table 407 – Literals of Production::EmissionValueSource ... 346
Table 408 – Attributes of Production::FossilFuel ... 347
Table 409 – Association ends of Production::FossilFuel with other classes ... 347
Table 410 – Attributes of Production::FuelAllocationSchedule ... 348
Table 411 – Association ends of Production::FuelAllocationSchedule with other classes ... 348
Table 412 – Literals of Production::FuelType ... 349
Table 413 – Attributes of Production::GenUnitOpCostCurve ... 349
Table 414 – Association ends of Production::GenUnitOpCostCurve with other classes ... 350
Table 415 – Attributes of Production::GenUnitOpSchedule ... 350
Table 416 – Association ends of Production::GenUnitOpSchedule with other classes ... 351

AVA Documents
Document Sharing Hub
Full document details: BS EN IEC 61970-301:2020

Table 417 – Attributes of Production::GeneratingUnit 351
Table 418 – Association ends of Production::GeneratingUnit with other classes 353
Table 419 – Literals of Production::GeneratorControlMode 354
Table 420 – Literals of Production::GeneratorControlSource 354
Table 421 – Attributes of Production::GrossToNetActivePowerCurve 354
Table 422 – Association ends of Production::GrossToNetActivePowerCurve with other classes 355
Table 423 – Attributes of Production::HeatInputCurve 355
Table 424 – Association ends of Production::HeatInputCurve with other classes 356
Table 425 – Attributes of Production::HeatRateCurve 356
Table 426 – Association ends of Production::HeatRateCurve with other classes 356
Table 427 – Literals of Production::HydroEnergyConversionKind 357
Table 428 – Attributes of Production::HydroGeneratingEfficiencyCurve 357
Table 429 – Association ends of Production::HydroGeneratingEfficiencyCurve with other classes 358
Table 430 – Attributes of Production::HydroGeneratingUnit 358
Table 431 – Association ends of Production::HydroGeneratingUnit with other classes 359
Table 432 – Literals of Production::HydroPlantStorageKind 360
Table 433 – Attributes of Production::HydroPowerPlant 360
Table 434 – Association ends of Production::HydroPowerPlant with other classes 361
Table 435 – Attributes of Production::HydroPump 362
Table 436 – Association ends of Production::HydroPump with other classes 362
Table 437 – Attributes of Production::HydroPumpOpSchedule 363
Table 438 – Association ends of Production::HydroPumpOpSchedule with other classes 363
Table 439 – Attributes of Production::IncrementalHeatRateCurve 364
Table 440 – Association ends of Production::IncrementalHeatRateCurve with other classes 364
Table 441 – Attributes of Production::InflowForecast 364
Table 442 – Association ends of Production::InflowForecast with other classes 365
Table 443 – Attributes of Production::LevelVsVolumeCurve 365
Table 444 – Association ends of Production::LevelVsVolumeCurve with other classes 366
Table 445 – Attributes of Production::NuclearGeneratingUnit 366
Table 446 – Association ends of Production::NuclearGeneratingUnit with other classes 367
Table 447 – Attributes of Production::PenstockLossCurve 368
Table 448 – Association ends of Production::PenstockLossCurve with other classes 368
Table 449 – Attributes of Production::PhotoVoltaicUnit 369
Table 450 – Association ends of Production::PhotoVoltaicUnit with other classes 369
Table 451 – Attributes of Production::PowerElectronicsUnit 370
Table 452 – Association ends of Production::PowerElectronicsUnit with other classes 370
Table 453 – Attributes of Production::PowerElectronicsWindUnit 371
Table 454 – Association ends of Production::PowerElectronicsWindUnit with other classes 371
Table 455 – Attributes of Production::Reservoir 372
Table 456 – Association ends of Production::Reservoir with other classes 372

AVA Documents
Document Sharing Hub
Full document details: BS EN IEC 61970-301:2020

Table 457 – Attributes of Production::ShutdownCurve 373
Table 458 – Association ends of Production::ShutdownCurve with other classes 373
Table 459 – Attributes of Production::SolarGeneratingUnit 374
Table 460 – Association ends of Production::SolarGeneratingUnit with other classes 375
Table 461 – Attributes of Production::StartIgnFuelCurve 376
Table 462 – Association ends of Production::StartIgnFuelCurve with other classes 376
Table 463 – Attributes of Production::StartMainFuelCurve 376
Table 464 – Association ends of Production::StartMainFuelCurve with other classes 377
Table 465 – Attributes of Production::StartRampCurve 377
Table 466 – Association ends of Production::StartRampCurve with other classes 378
Table 467 – Attributes of Production::StartupModel 378
Table 468 – Association ends of Production::StartupModel with other classes 379
Table 469 – Attributes of Production::SteamSendoutSchedule 379
Table 470 – Association ends of Production::SteamSendoutSchedule with other classes 379
Table 471 – Attributes of Production::TailbayLossCurve 380
Table 472 – Association ends of Production::TailbayLossCurve with other classes 380
Table 473 – Attributes of Production::TargetLevelSchedule 381
Table 474 – Association ends of Production::TargetLevelSchedule with other classes 381
Table 475 – Attributes of Production::ThermalGeneratingUnit 382
Table 476 – Association ends of Production::ThermalGeneratingUnit with other classes 383
Table 477 – Attributes of Production::WindGeneratingUnit 384
Table 478 – Association ends of Production::WindGeneratingUnit with other classes 385
Table 479 – Attributes of DC::ACDCConverter 391
Table 480 – Association ends of DC::ACDCConverter with other classes 392
Table 481 – Attributes of DC::ACDCConverterDCTerminal 393
Table 482 – Association ends of DC::ACDCConverterDCTerminal with other classes 393
Table 483 – Attributes of DC::CsConverter 394
Table 484 – Association ends of DC::CsConverter with other classes 396
Table 485 – Attributes of DC::DCTopologicalNode 396
Table 486 – Association ends of DC::DCTopologicalNode with other classes 397
Table 487 – Literals of DC::CsOperatingModeKind 397
Table 488 – Literals of DC::CsPpccControlKind 397
Table 489 – Attributes of DC::DCBaseTerminal 398
Table 490 – Association ends of DC::DCBaseTerminal with other classes 398
Table 491 – Attributes of DC::DCBreaker 398
Table 492 – Association ends of DC::DCBreaker with other classes 399
Table 493 – Attributes of DC::DCBusbar 399
Table 494 – Association ends of DC::DCBusbar with other classes 400
Table 495 – Attributes of DC::DCChopper 400
Table 496 – Association ends of DC::DCChopper with other classes 401
Table 497 – Attributes of DC::DCConductingEquipment 401
Table 498 – Association ends of DC::DCConductingEquipment with other classes 402

AVA Documents
Document Sharing Hub
Full document details: BS EN IEC 61970-301:2020

Table 499 – Literals of DC::DCConverterOperatingModeKind 402
Table 500 – Attributes of DC::DCConverterUnit 402
Table 501 – Association ends of DC::DCConverterUnit with other classes 403
Table 502 – Attributes of DC::DCDisconnector 403
Table 503 – Association ends of DC::DCDisconnector with other classes 404
Table 504 – Attributes of DC::DCEquipmentContainer 404
Table 505 – Association ends of DC::DCEquipmentContainer with other classes 405
Table 506 – Attributes of DC::DCGround 405
Table 507 – Association ends of DC::DCGround with other classes 406
Table 508 – Attributes of DC::DCLine 406
Table 509 – Association ends of DC::DCLine with other classes 406
Table 510 – Attributes of DC::DCLineSegment 407
Table 511 – Association ends of DC::DCLineSegment with other classes 408
Table 512 – Attributes of DC::DCNode 408
Table 513 – Association ends of DC::DCNode with other classes 409
Table 514 – Literals of DC::DCPolarityKind 409
Table 515 – Attributes of DC::DCSeriesDevice 409
Table 516 – Association ends of DC::DCSeriesDevice with other classes 410
Table 517 – Attributes of DC::DCShunt 410
Table 518 – Association ends of DC::DCShunt with other classes 411
Table 519 – Attributes of DC::DCSwitch 411
Table 520 – Association ends of DC::DCSwitch with other classes 412
Table 521 – Attributes of DC::DCTerminal 412
Table 522 – Association ends of DC::DCTerminal with other classes 412
Table 523 – Attributes of DC::DCTopologicalIsland 413
Table 524 – Association ends of DC::DCTopologicalIsland with other classes 413
Table 525 – Attributes of DC::PerLengthDCLineParameter 413
Table 526 – Association ends of DC::PerLengthDCLineParameter with other classes 414
Table 527 – Attributes of DC::VsCapabilityCurve 414
Table 528 – Association ends of DC::VsCapabilityCurve with other classes 414
Table 529 – Attributes of DC::VsConverter 415
Table 530 – Association ends of DC::VsConverter with other classes 416
Table 531 – Literals of DC::VsPpccControlKind 417
Table 532 – Literals of DC::VsQpccControlKind 418
Table 533 – Attributes of Equivalents::EquivalentBranch 420
Table 534 – Association ends of Equivalents::EquivalentBranch with other classes 422
Table 535 – Attributes of Equivalents::EquivalentEquipment 422
Table 536 – Association ends of Equivalents::EquivalentEquipment with other classes 423
Table 537 – Attributes of Equivalents::EquivalentInjection 423
Table 538 – Association ends of Equivalents::EquivalentInjection with other classes 425
Table 539 – Attributes of Equivalents::EquivalentNetwork 425
Table 540 – Association ends of Equivalents::EquivalentNetwork with other classes 426
Table 541 – Attributes of Equivalents::EquivalentShunt 426

AVA Documents
Document Sharing Hub
Full document details: BS EN IEC 61970-301:2020

Table 542 – Association ends of Equivalents::EquivalentShunt with other classes 427
Table 543 – Attributes of AuxiliaryEquipment::AuxiliaryEquipment 429
Table 544 – Association ends of AuxiliaryEquipment::AuxiliaryEquipment with other classes 429
Table 545 – Attributes of AuxiliaryEquipment::CurrentTransformer 430
Table 546 – Association ends of AuxiliaryEquipment::CurrentTransformer with other classes 430
Table 547 – Attributes of AuxiliaryEquipment::FaultIndicator 431
Table 548 – Association ends of AuxiliaryEquipment::FaultIndicator with other classes 431
Table 549 – Attributes of AuxiliaryEquipment::PostLineSensor 432
Table 550 – Association ends of AuxiliaryEquipment::PostLineSensor with other classes 432
Table 551 – Attributes of AuxiliaryEquipment::PotentialTransformer 433
Table 552 – Association ends of AuxiliaryEquipment::PotentialTransformer with other classes 433
Table 553 – Literals of AuxiliaryEquipment::PotentialTransformerKind 434
Table 554 – Attributes of AuxiliaryEquipment::Sensor 434
Table 555 – Association ends of AuxiliaryEquipment::Sensor with other classes 434
Table 556 – Attributes of AuxiliaryEquipment::SurgeArrester 435
Table 557 – Association ends of AuxiliaryEquipment::SurgeArrester with other classes 435
Table 558 – Attributes of AuxiliaryEquipment::WaveTrap 436
Table 559 – Association ends of AuxiliaryEquipment::WaveTrap with other classes 436
Table 560 – Attributes of Meas::Accumulator 440
Table 561 – Association ends of Meas::Accumulator with other classes 441
Table 562 – Attributes of Meas::AccumulatorLimit 441
Table 563 – Association ends of Meas::AccumulatorLimit with other classes 441
Table 564 – Attributes of Meas::AccumulatorLimitSet 442
Table 565 – Association ends of Meas::AccumulatorLimitSet with other classes 442
Table 566 – Attributes of Meas::AccumulatorReset 442
Table 567 – Association ends of Meas::AccumulatorReset with other classes 443
Table 568 – Attributes of Meas::AccumulatorValue 443
Table 569 – Association ends of Meas::AccumulatorValue with other classes 443
Table 570 – Attributes of Meas::Analog 444
Table 571 – Association ends of Meas::Analog with other classes 444
Table 572 – Attributes of Meas::AnalogControl 445
Table 573 – Association ends of Meas::AnalogControl with other classes 445
Table 574 – Attributes of Meas::AnalogLimit 445
Table 575 – Association ends of Meas::AnalogLimit with other classes 446
Table 576 – Attributes of Meas::AnalogLimitSet 446
Table 577 – Association ends of Meas::AnalogLimitSet with other classes 446
Table 578 – Attributes of Meas::AnalogValue 447
Table 579 – Association ends of Meas::AnalogValue with other classes 447
Table 580 – Attributes of Meas::Command 448
Table 581 – Association ends of Meas::Command with other classes 448

AVA Documents
Document Sharing Hub

Full document details: BS EN IEC 61970-301:2020

Table 582 – Attributes of Meas::Control 449
Table 583 – Association ends of Meas::Control with other classes 449
Table 584 – Attributes of Meas::Discrete 450
Table 585 – Association ends of Meas::Discrete with other classes 450
Table 586 – Attributes of Meas::DiscreteValue 450
Table 587 – Association ends of Meas::DiscreteValue with other classes 451
Table 588 – Attributes of Meas::IOPoint 451
Table 589 – Association ends of Meas::IOPoint with other classes 451
Table 590 – Attributes of Meas::Limit 452
Table 591 – Association ends of Meas::Limit with other classes 452
Table 592 – Attributes of Meas::LimitSet 452
Table 593 – Association ends of Meas::LimitSet with other classes 453
Table 594 – Attributes of Meas::Measurement 453
Table 595 – Association ends of Meas::Measurement with other classes 454
Table 596 – Attributes of Meas::MeasurementValue 454
Table 597 – Association ends of Meas::MeasurementValue with other classes 455
Table 598 – Attributes of Meas::MeasurementValueQuality 455
Table 599 – Association ends of Meas::MeasurementValueQuality with other classes 456
Table 600 – Attributes of Meas::MeasurementValueSource 456
Table 601 – Association ends of Meas::MeasurementValueSource with other classes 456
Table 602 – Attributes of Meas::Quality61850 457
Table 603 – Attributes of Meas::RaiseLowerCommand 458
Table 604 – Association ends of Meas::RaiseLowerCommand with other classes 458
Table 605 – Attributes of Meas::SetPoint 458
Table 606 – Association ends of Meas::SetPoint with other classes 459
Table 607 – Attributes of Meas::StringMeasurement 459
Table 608 – Association ends of Meas::StringMeasurement with other classes 460
Table 609 – Attributes of Meas::StringMeasurementValue 460
Table 610 – Association ends of Meas::StringMeasurementValue with other classes 460
Table 611 – Literals of Meas::Validity 461
Table 612 – Attributes of Meas::ValueAliasSet 461
Table 613 – Association ends of Meas::ValueAliasSet with other classes 461
Table 614 – Attributes of Meas::ValueToAlias 462
Table 615 – Association ends of Meas::ValueToAlias with other classes 462
Table 616 – Attributes of Topology::BusNameMarker 464
Table 617 – Association ends of Topology::BusNameMarker with other classes 464
Table 618 – Attributes of Topology::TopologicalIsland 465
Table 619 – Association ends of Topology::TopologicalIsland with other classes 465
Table 620 – Attributes of Topology::TopologicalNode 465
Table 621 – Association ends of Topology::TopologicalNode with other classes 466
Table 622 – Attributes of DiagramLayout::Diagram 467
Table 623 – Association ends of DiagramLayout::Diagram with other classes 468
Table 624 – Attributes of DiagramLayout::DiagramObject 468

AVA Documents
Document Sharing Hub
Full document details: BS EN IEC 61970-301:2020

Table 625 – Association ends of DiagramLayout::DiagramObject with other classes 469
Table 626 – Association ends of DiagramLayout::DiagramObjectGluePoint with other classes 470
Table 627 – Attributes of DiagramLayout::DiagramObjectPoint 470
Table 628 – Association ends of DiagramLayout::DiagramObjectPoint with other classes 470
Table 629 – Attributes of DiagramLayout::DiagramObjectStyle 471
Table 630 – Association ends of DiagramLayout::DiagramObjectStyle with other classes 471
Table 631 – Attributes of DiagramLayout::DiagramStyle 471
Table 632 – Association ends of DiagramLayout::DiagramStyle with other classes 471
Table 633 – Literals of DiagramLayout::OrientationKind 472
Table 634 – Attributes of DiagramLayout::TextDiagramObject 472
Table 635 – Association ends of DiagramLayout::TextDiagramObject with other classes 472
Table 636 – Attributes of DiagramLayout::VisibilityLayer 473
Table 637 – Association ends of DiagramLayout::VisibilityLayer with other classes 473
Table 638 – Attributes of OperationalLimits::ActivePowerLimit 475
Table 639 – Association ends of OperationalLimits::ActivePowerLimit with other classes 476
Table 640 – Attributes of OperationalLimits::ApparentPowerLimit 476
Table 641 – Association ends of OperationalLimits::ApparentPowerLimit with other classes 476
Table 642 – Attributes of OperationalLimits::BranchGroup 477
Table 643 – Association ends of OperationalLimits::BranchGroup with other classes 477
Table 644 – Attributes of OperationalLimits::BranchGroupTerminal 477
Table 645 – Association ends of OperationalLimits::BranchGroupTerminal with other classes 477
Table 646 – Attributes of OperationalLimits::CurrentLimit 478
Table 647 – Association ends of OperationalLimits::CurrentLimit with other classes 478
Table 648 – Attributes of OperationalLimits::OperationalLimit 478
Table 649 – Association ends of OperationalLimits::OperationalLimit with other classes 479
Table 650 – Literals of OperationalLimits::OperationalLimitDirectionKind 479
Table 651 – Attributes of OperationalLimits::OperationalLimitSet 479
Table 652 – Association ends of OperationalLimits::OperationalLimitSet with other classes 480
Table 653 – Attributes of OperationalLimits::OperationalLimitType 480
Table 654 – Association ends of OperationalLimits::OperationalLimitType with other classes 480
Table 655 – Attributes of OperationalLimits::VoltageLimit 481
Table 656 – Association ends of OperationalLimits::VoltageLimit with other classes 481
Table 657 – Attributes of ControlArea::AltGeneratingUnitMeas 484
Table 658 – Association ends of ControlArea::AltGeneratingUnitMeas with other classes 484
Table 659 – Attributes of ControlArea::AltTieMeas 484
Table 660 – Association ends of ControlArea::AltTieMeas with other classes 485

Documents
Document Sharing Hub
Full document details: BS EN IEC 61970-301:2020

Table 661 – Attributes of ControlArea::ControlArea 485
Table 662 – Association ends of ControlArea::ControlArea with other classes 486
Table 663 – Attributes of ControlArea::ControlAreaGeneratingUnit 486
Table 664 – Association ends of ControlArea::ControlAreaGeneratingUnit with other classes 487
Table 665 – Literals of ControlArea::ControlAreaTypeKind 487
Table 666 – Attributes of ControlArea::TieFlow 487
Table 667 – Association ends of ControlArea::TieFlow with other classes 488
Table 668 – Attributes of Contingency::Contingency 489
Table 669 – Association ends of Contingency::Contingency with other classes 489
Table 670 – Attributes of Contingency::ContingencyElement 489
Table 671 – Association ends of Contingency::ContingencyElement with other classes 489
Table 672 – Attributes of Contingency::ContingencyEquipment 490
Table 673 – Association ends of Contingency::ContingencyEquipment with other classes 490
Table 674 – Literals of Contingency::ContingencyEquipmentStatusKind 490
Table 675 – Attributes of StateVariables::SvInjection 492
Table 676 – Association ends of StateVariables::SvInjection with other classes 492
Table 677 – Attributes of StateVariables::SvPowerFlow 492
Table 678 – Association ends of StateVariables::SvPowerFlow with other classes 492
Table 679 – Attributes of StateVariables::SvShuntCompensatorSections 493
Table 680 – Association ends of StateVariables::SvShuntCompensatorSections with other classes 493
Table 681 – Attributes of StateVariables::SvStatus 493
Table 682 – Association ends of StateVariables::SvStatus with other classes 493
Table 683 – Attributes of StateVariables::SvSwitch 494
Table 684 – Association ends of StateVariables::SvSwitch with other classes 494
Table 685 – Attributes of StateVariables::SvTapStep 494
Table 686 – Association ends of StateVariables::SvTapStep with other classes 494
Table 687 – Attributes of StateVariables::SvVoltage 495
Table 688 – Association ends of StateVariables::SvVoltage with other classes 495
Table 689 – Attributes of Protection::CurrentRelay 496
Table 690 – Association ends of Protection::CurrentRelay with other classes 497
Table 691 – Attributes of Protection::ProtectionEquipment 497
Table 692 – Association ends of Protection::ProtectionEquipment with other classes 498
Table 693 – Attributes of Protection::RecloseSequence 498
Table 694 – Association ends of Protection::RecloseSequence with other classes 499
Table 695 – Attributes of Protection::SynchrocheckRelay 499
Table 696 – Association ends of Protection::SynchrocheckRelay with other classes 500
Table 697 – Attributes of Faults::EquipmentFault 501
Table 698 – Association ends of Faults::EquipmentFault with other classes 501
Table 699 – Attributes of Faults::Fault 501
Table 700 – Association ends of Faults::Fault with other classes 502
Table 701 – Attributes of Faults::FaultCauseType 502

AVA Documents
Document Sharing Hub
Full document details: BS EN IEC 61970-301:2020

Table 702 – Association ends of Faults::FaultCauseType with other classes 502
Table 703 – Attributes of Faults::FaultImpedance 503
Table 704 – Attributes of Faults::LineFault 503
Table 705 – Association ends of Faults::LineFault with other classes 503
Table 706 – Literals of Faults::PhaseConnectedFaultKind 504
Table 707 – Attributes of SCADA::CommunicationLink 505
Table 708 – Association ends of SCADA::CommunicationLink with other classes 506
Table 709 – Attributes of SCADA::RemoteControl 506
Table 710 – Association ends of SCADA::RemoteControl with other classes 506
Table 711 – Attributes of SCADA::RemotePoint 507
Table 712 – Association ends of SCADA::RemotePoint with other classes 507
Table 713 – Attributes of SCADA::RemoteSource 507
Table 714 – Association ends of SCADA::RemoteSource with other classes 508
Table 715 – Attributes of SCADA::RemoteUnit 508
Table 716 – Association ends of SCADA::RemoteUnit with other classes 508
Table 717 – Literals of SCADA::RemoteUnitType 509
Table 718 – Literals of SCADA::Source 509
Table 719 – Literals of ICCPConfiguration::ApplicationSecurityKind 512
Table 720 – Attributes of ICCPConfiguration::BilateralExchangeActor 512
Table 721 – Association ends of ICCPConfiguration::BilateralExchangeActor with other classes 512
Table 722 – Attributes of ICCPConfiguration::BilateralExchangeAgreement 513
Table 723 – Association ends of ICCPConfiguration::BilateralExchangeAgreement with other classes 513
Table 724 – Literals of ICCPConfiguration::ICCPAccessPrivilegeKind 513
Table 725 – Attributes of ICCPConfiguration::ICCPInformationMessage 514
Table 726 – Association ends of ICCPConfiguration::ICCPInformationMessage with other classes 514
Table 727 – Literals of ICCPConfiguration::ICCPPointKind 514
Table 728 – Attributes of ICCPConfiguration::ICCPProvidedPoint 515
Table 729 – Association ends of ICCPConfiguration::ICCPProvidedPoint with other classes 515
Table 730 – Literals of ICCPConfiguration::ICCPQualityKind 516
Table 731 – Literals of ICCPConfiguration::ICCPScopeKind 516
Table 732 – Attributes of ICCPConfiguration::ICCPVCC 516
Table 733 – Association ends of ICCPConfiguration::ICCPVCC with other classes 517
Table 734 – Attributes of ICCPConfiguration::ICCPVirtualControlCentre 517
Table 735 – Association ends of ICCPConfiguration::ICCPVirtualControlCentre with other classes 518
Table 736 – Attributes of ICCPConfiguration::IOPointSource 518
Table 737 – Association ends of ICCPConfiguration::IOPointSource with other classes 519
Table 738 – Attributes of ICCPConfiguration::IPAccessPoint 519
Table 739 – Association ends of ICCPConfiguration::IPAccessPoint with other classes 519
Table 740 – Literals of ICCPConfiguration::IPAddressKind 520
Table 741 – Attributes of ICCPConfiguration::ISOUpperLayer 520

AVA Documents
Document Sharing Hub

Table 742 – Association ends of ICCPConfiguration::ISOUpperLayer with other classes.....521
Table 743 – Attributes of ICCPConfiguration::ProvidedBilateralPoint 521
Table 744 – Association ends of ICCPConfiguration::ProvidedBilateralPoint with other classes 521
Table 745 – Attributes of ICCPConfiguration::PublicX509Certificate 522
Table 746 – Association ends of ICCPConfiguration::PublicX509Certificate with other classes 522
Table 747 – Attributes of ICCPConfiguration::TASE2BilateralTable.....522
Table 748 – Association ends of ICCPConfiguration::TASE2BilateralTable with other classes 523
Table 749 – Attributes of ICCPConfiguration::TCPAccessPoint.....523
Table 750 – Association ends of ICCPConfiguration::TCPAccessPoint with other classes 524
Table A.1 – Attributes of ExtEuCore::BoundaryPoint.....527
Table A.2 – Association ends of ExtEuCore::BoundaryPoint with other classes.....528
Table A.3 – Attributes of ExtEuCore::ExtEuIdentifiedObject 528
Table A.4 – Attributes of ExtEuOperationalLimits::ExtEuOperationalLimitType.....529
Table A.5 – Literals of ExtEuOperationalLimits::LimitKind 530
Table A.6 – Attributes of ExtEuProduction::SolarPowerPlant.....532
Table A.7 – Association ends of ExtEuProduction::SolarPowerPlant with other classes 532
Table A.8 – Attributes of ExtEuProduction::WindPowerPlant.....533
Table A.9 – Association ends of ExtEuProduction::WindPowerPlant with other classes.....533

Documents
Document Sharing Hub
Full document details: BS EN IEC 61970-301:2020

INTERNATIONAL ELECTROTECHNICAL COMMISSION

ENERGY MANAGEMENT SYSTEM APPLICATION PROGRAM INTERFACE (EMS-API) –

Part 301: Common information model (CIM) base

FOREWORD

1) The International Electrotechnical Commission (IEC) is a worldwide organization for standardization comprising all national electrotechnical committees (IEC National Committees). The object of IEC is to promote international co-operation on all questions concerning standardization in the electrical and electronic fields. To this end and in addition to other activities, IEC publishes International Standards, Technical Specifications, Technical Reports, Publicly Available Specifications (PAS) and Guides (hereafter referred to as "IEC Publication(s)"). Their preparation is entrusted to technical committees; any IEC National Committee interested in the subject dealt with may participate in this preparatory work. International, governmental and non-governmental organizations liaising with the IEC also participate in this preparation. IEC collaborates closely with the International Organization for Standardization (ISO) in accordance with conditions determined by agreement between the two organizations.
2) The formal decisions or agreements of IEC on technical matters express, as nearly as possible, an international consensus of opinion on the relevant subjects since each technical committee has representation from all interested IEC National Committees.
3) IEC Publications have the form of recommendations for international use and are accepted by IEC National Committees in that sense. While all reasonable efforts are made to ensure that the technical content of IEC Publications is accurate, IEC cannot be held responsible for the way in which they are used or for any misinterpretation by any end user.
4) In order to promote international uniformity, IEC National Committees undertake to apply IEC Publications transparently to the maximum extent possible in their national and regional publications. Any divergence between any IEC Publication and the corresponding national or regional publication shall be clearly indicated in the latter.
5) IEC itself does not provide any attestation of conformity. Independent certification bodies provide conformity assessment services and, in some areas, access to IEC marks of conformity. IEC is not responsible for any services carried out by independent certification bodies.
6) All users should ensure that they have the latest edition of this publication.
7) No liability shall attach to IEC or its directors, employees, servants or agents including individual experts and members of its technical committees and IEC National Committees for any personal injury, property damage or other damage of any nature whatsoever, whether direct or indirect, or for costs (including legal fees) and expenses arising out of the publication, use of, or reliance upon, this IEC Publication or any other IEC Publications.
8) Attention is drawn to the Normative references cited in this publication. Use of the referenced publications is indispensable for the correct application of this publication.
9) Attention is drawn to the possibility that some of the elements of this IEC Publication may be the subject of patent rights. IEC shall not be held responsible for identifying any or all such patent rights.

International Standard IEC 61970-301 has been prepared by IEC technical committee 57: Power systems management and associated information exchange.

This seventh edition cancels and replaces the sixth edition, published in 2016. This edition constitutes a technical revision.

This edition reflects the model content version 'IEC61970CIM17v38', dated '2020-01-21', and includes the following significant technical changes with respect to the previous edition:

a) Added Feeder modelling;
b) Added ICCP configuration modelling;
c) Correction of issues found in interoperability testing or use of the standard;
d) Improved documentation;
e) Updated Annex A with custom extensions;
f) Added Annex B Examples of PST transformer modelling;

Documents
Document Sharing Hub

g) Added Annex C HVDC use cases.

The text of this standard is based on the following documents:

FDIS	Report on voting
57/2210/FDIS	57/2224/RVD

Full information on the voting for the approval of this standard can be found in the report on voting indicated in the above table.

This publication has been drafted in accordance with the ISO/IEC Directives, Part 2.

A list of all parts of the IEC 61970 series, under the general title: *Energy management system application program interface (EMS-API)*, can be found on the IEC website.

The committee has decided that the contents of this publication will remain unchanged until the stability date indicated on the IEC website under "http://webstore.iec.ch" in the data related to the specific publication. At this date, the publication will be

- reconfirmed,
- withdrawn,
- replaced by a revised edition, or
- amended.

IMPORTANT – The 'colour inside' logo on the cover page of this publication indicates that it contains colours which are considered to be useful for the correct understanding of its contents. Users should therefore print this document using a colour printer.

Documents
Document Sharing Hub

Full document details: BS EN IEC 61970-301:2020

INTRODUCTION

This document is part of the IEC 61970 series which define an application program interface (API) for an energy management system (EMS). IEC 61970 was originally based upon the work of the EPRI Control Center API (CCAPI) research project (RP-3654-1). The principle objectives of the EPRI CCAPI project were to:

- reduce the cost and time needed to add new applications to an EMS;
- protect the investment of existing applications or systems that are working effectively with an EMS.

The principal objective of the IEC 61970 series is to produce documents which facilitate the integration of EMS applications developed independently by different vendors, between entire EMS systems developed independently, or between an EMS system and other systems concerned with different aspects of power system operations, such as generation or distribution management systems (DMS). This is accomplished by defining application program interfaces to enable these applications or systems access to public data and exchange information independent of how such information is represented internally.

The Common Information Model (CIM) specifies the semantics for this API. The Component Interface Specifications (CIS), which are contained in other parts of the IEC 61970 series, specify the content of the messages exchanged.

The CIM is an abstract model that represents all the major objects in an electric utility enterprise typically needed to model the operational aspects of a utility. This model includes public classes and attributes for these objects, as well as the relationships between them.

This document defines the CIM Base set of packages which provide a logical view of the functional aspects of an Energy Management System including Supervisory Control and Data Acquisition (SCADA). Other functional areas are standardized in separate IEC documents that augment and reference this document. For example, IEC 61968-11 addresses distribution models and references this document. While there are multiple IEC standards dealing with different parts of the CIM, there is a single, unified information model comprising the CIM behind all these individual standards documents.

The International Electrotechnical Commission (IEC) draws attention to the fact that it is claimed that compliance with this document may involve the use of a patent concerning a computer-based implementation of an object-oriented power system model in a relational database. As such, it does not conflict with the development of any logical power system model including the Common Information Model (CIM), where implementation of the model is not defined.

The IEC takes no position concerning the evidence, validity and scope of this patent right.

The holder of this patent right has assured the IEC that he/she is willing to negotiate licences either free of charge or under reasonable and non-discriminatory terms and conditions with applicants throughout the world. In this respect, the statement of the holder of this patent right is registered with IEC. Information may be obtained from:

ICL
Wenlock Way
West Gorton
Manchester
M12 5DR
United Kingdom

Documents
Document Sharing Hub

Full document details: BS EN IEC 61970-301:2020

Attention is drawn to the possibility that some of the elements of this document may be the subject of patent rights other than those identified above. IEC shall not be held responsible for identifying any or all such patent rights.

ISO (www.iso.org/patents) and IEC (http://www.iec.ch/tctools/patent_decl.htm) maintain on-line data bases of patents relevant to their standards. Users are encouraged to consult the data bases for the most up to date information concerning patents.

Documents
Document Sharing Hub

Full document details: BS EN IEC 61970-301:2020

ENERGY MANAGEMENT SYSTEM APPLICATION PROGRAM INTERFACE (EMS-API) –

Part 301: Common information model (CIM) base

1 Scope

The common information model (CIM) is an abstract model that represents all the major objects in an electric utility enterprise typically involved in utility operations. By providing a standard way of representing power system resources as object classes and attributes, along with their relationships, the CIM facilitates the integration and interoperability of network applications developed independently by different vendors, between entire systems running network applications developed independently, or between a system running network applications and other systems concerned with different aspects of power system operations, such as generation or distribution management. SCADA is modelled to the extent necessary to support power system simulation and inter-control centre communication. The CIM facilitates integration by defining a common language (i.e. semantics) based on the CIM to enable these applications or systems to access public data and exchange information independent of how such information is represented internally.

The object classes represented in the CIM are abstract in nature and can be used in a wide variety of applications. The use of the CIM goes far beyond its application in an EMS. This document should be understood as a tool to enable integration in any domain where a common power system model is needed to facilitate interoperability and plug compatibility between applications and systems independent of any particular implementation.

Due to the size of the complete CIM, the object classes contained in the CIM are grouped into several logical Packages, each of which represents a certain part of the overall power system being modelled. Collections of these Packages are progressed as separate International Standards. This document specifies a Base set of packages which provide a logical view of the functional aspects of Energy Management System (EMS) and power system modelling information within the electric utility enterprise that is shared between all applications. Other standards specify more specific parts of the model that are needed by only certain applications. Subclause 4.3 of this document provides the current grouping of packages into standards documents.

2 Normative references

The following documents are referred to in the text in such a way that some or all of their content constitutes requirements of this document. For dated references, only the edition cited applies. For undated references, the latest edition of the referenced document (including any amendments) applies.

IEC 61850 (all parts), *Communication networks and systems for power utility automation*

IEC 61850-7-4:2010, *Communication networks and systems for power utility automation – Part 7-4: Basic communication structure – Compatible logical node classes and data object classes*

IEC 61968 (all parts), *Application integration at electric utilities – System interfaces for distribution management*

IEC TS 61970-2, *Energy management system application program interface (EMS-API) – Part 2: Glossary*

Object Management Group: *UML 2.0 Specification* – http://www.omg.org

Documents
Document Sharing Hub

Full document details: BS EN IEC 61970-301:2020

3 Terms and definitions

For the purposes of this document, the terms and definitions given in IEC TS 61970-2 and the following apply.

ISO and IEC maintain terminological databases for use in standardization at the following addresses:

- IEC Electropedia: available at http://www.electropedia.org/
- ISO Online browsing platform: available at http://www.iso.org/obp

3.1
energy management system
EMS
computer system comprising a software platform providing basic support services and a set of applications providing the functionality needed for the effective operation of electrical generation and transmission facilities so as to assure adequate security of energy supply at minimum cost

3.2
application program interface
API
set of public functions provided by an executable application component for use by other executable application components

3.3
unified modelling language
UML
formal and comprehensive descriptive language with diagramming techniques used to represent software systems, from requirements analysis, through design and implementation, to documentation

Note 1 to entry: UML has evolved from a collection of methods contributed by different practitioners into an International Standard (ISO/IEC 19505, published in 2012). The CIM relies on UML for defining the model, and automated tools generate the documentation, schemas, and other artefacts directly from the UML. A basic understanding of UML is necessary to understand the CIM.

3.4
profile
subset of CIM classes, associations and attributes needed to accomplish a specific type of interface

Note 1 to entry: This may be expressed in XSD, RDF, and/or OWL files. A profile can be tested between applications. A profile is necessary in order to “use” the CIM. Several profiles are defined in other parts of the IEC 61968 and IEC 62325 series.

4 CIM specification

4.1 Overview

The CIM model is described in the Unified Modelling Language (UML) which is maintained as a UML file managed by a UML editing tool. The UML file exists in two different formats:

- a tool proprietary format,
- a standardized xmi format.

The CIM model is described in Clause 6, which is a report generated from the UML file. The name of the UML file use to generate Clause 6 is:

- iec61970cim17v38_iec61968cim13v12_iec62325cim03v17a.eap.

Documents
Document Sharing Hub

Full document details: BS EN IEC 61970-301:2020

This file can be obtained from CIM users group.

4.2 CIM modelling notation

The CIM is defined using object-oriented modelling techniques. Specifically, the CIM specification uses the UML notation, which defines the CIM as a group of packages.

Each package in the CIM contains one or more class diagrams showing graphically all the classes in that package and their relationships. Each class is then defined in text in terms of its attributes and relationships to other classes.

The UML notation is described in Object Management Group (OMG) documents and several published textbooks.

4.3 CIM packages

A package is a general purpose means of grouping related model elements. The packages have been chosen to make the model easier to design, understand and review. Entities may have associations that cross many package boundaries. Each application will use information represented in several packages.

Different groups of packages are assigned to different working groups within the IEC for convenience in managing and maintaining them.

WG13 packages are included in this document and contained under the IEC61970 package. The IEC61970 packages do not depend upon other outside packages. As shown in Figure 1, the IEC61970 package and its subpackages are used as a core or base model for other CIM packages. The dashed lines indicate dependency relationships, with the arrowhead pointing from the dependent package to the package on which it has a dependency. WG14 packages in the IEC 61968 series describe additional parts of the CIM that deal with other logical views of utility operations including assets, locations, activities, consumers, documentation, work management, and metering. WG16 packages in the IEC 62325 series describe electric energy markets.

Documents
Document Sharing Hub

Full document details: BS EN IEC 61970-301:2020

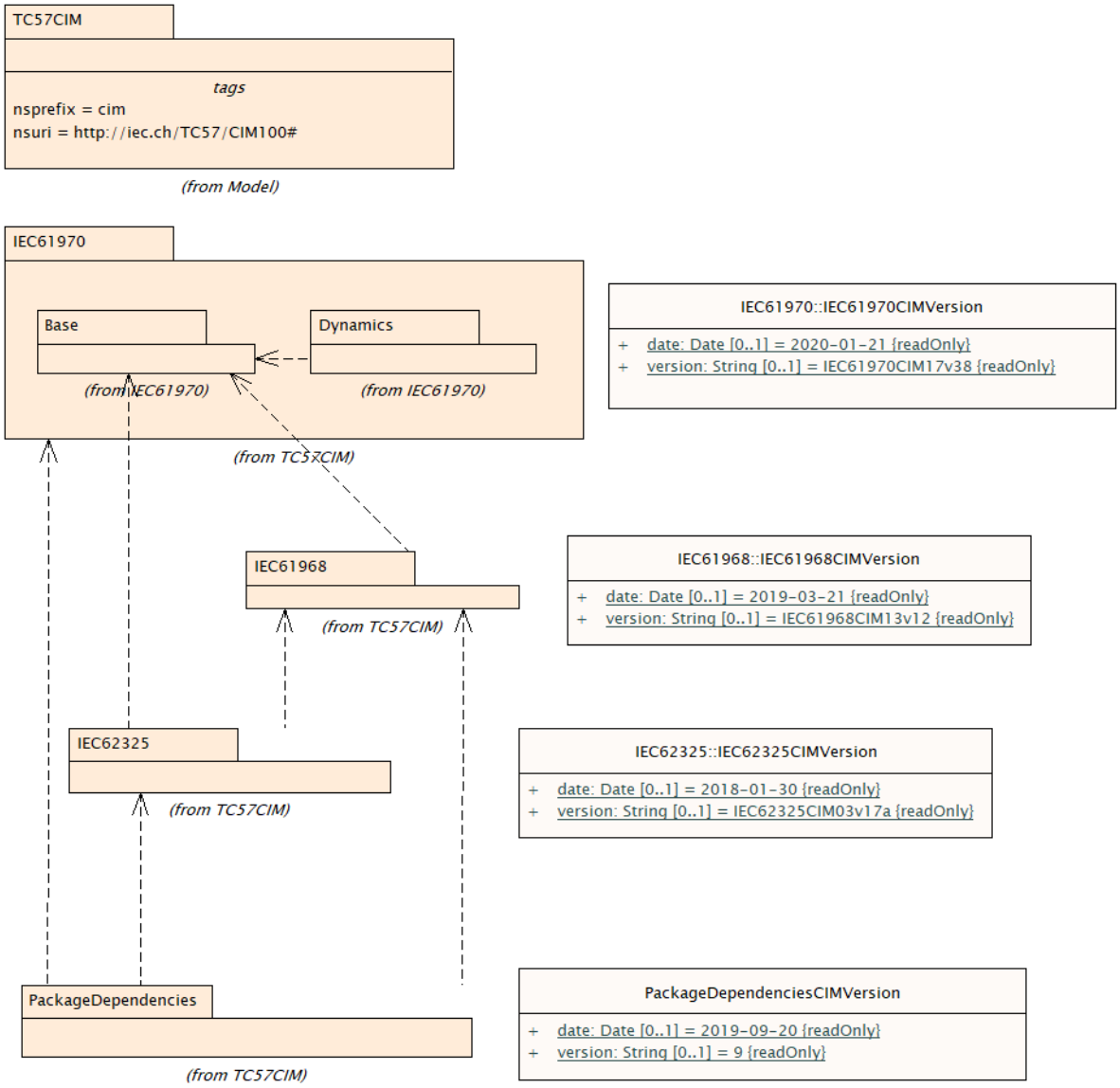

Figure 1 – Defined dependencies between CIM packages and packages' versions information

Note that the package boundaries do not imply application boundaries. An application may use CIM entities from several packages. It is also anticipated that CIM packages outside of this document will have dependencies upon some of the packages described in this document, and particularly the Domain and Core packages, though other dependencies will also exist.

Figure 2 shows the packages defined for IEC 61970-301 CIM Base and their dependency relationships.

Documents
Document Sharing Hub
Full document details: BS EN IEC 61970-301:2020

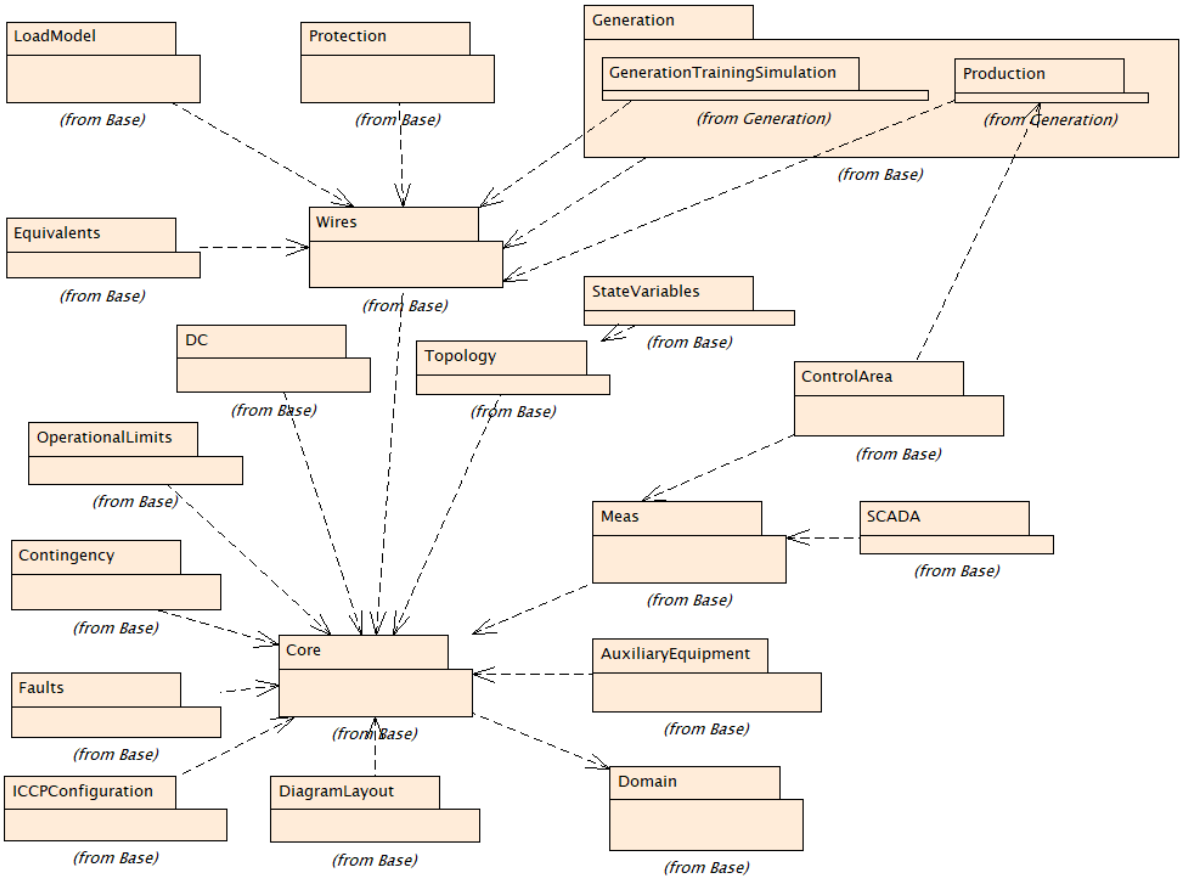

Figure 2 – CIM IEC 61970-301 package diagram

4.4 CIM classes and relationships

4.4.1 Classes

The class diagram(s) for each CIM package shows all the classes in the package and their relationships. Where relationships exist with classes in other packages, those classes may also be shown.

Classes and objects model what is in a power system that needs to be represented in a common way to power system applications. A class is a description of an object found in the real world, such as a power transformer, generator, or load that needs to be represented as part of the overall power system model in, for example, an EMS. Other types of objects include things such as schedules and measurements that EMS applications also need to process, analyse, and store. Such objects need a common representation to achieve the purposes of the EMS-API standard for plug-compatibility and interoperability. A particular object in a power system with a unique identity is modelled as an instance of the class to which it belongs.

It should also be noted that the CIM is defined to facilitate data exchange. As defined in this document, the properties of CIM entities are modelled, but not their behaviour. For a specific interface, a profile is defined consisting of subsets of CIM classes, attributes, and associations. A profile defines the message payload for an interface.

Classes have attributes that describe the characteristics of the objects. Each class in the CIM contains the attributes that describe and identify a specific instance of the class. Only the attributes that are important for the integration and interoperability of power system applications are included in the class descriptions.

Documents
Document Sharing Hub
Full document details: BS EN IEC 61970-301:2020

Each attribute has a type, which identifies what kind of attribute it is. Typical attributes are of type Integer, Float, Boolean, String, Date, and Decimal, which are called primitive types. However, many additional types are defined as part of the CIM specification. For example, ShuntCompensator has a "maxU" attribute of type Voltage. The definition of many shared types is contained in the Domain package. The UML stereotypes of Primitive, enumeration, CIMDatatype, and Compound are added to classes used as types. The CIMDatatype stereotype is used with a specific CIM semantics for a simple value with additional attributes describing the unit and multiplier of the value, e.g. unit, multiplier. This implies custom mapping to serialization artefacts such as RDFS, OWL, and XSD. Classes with these stereotypes do not participate in generalization or association relationships and are simply used as types for attributes. The enumeration stereotype is used to describe an attribute with an enumerated list of choices. The Compound stereotype is used to describe sets of related attributes that are commonly reused. Compound classes may consist of Primitive, enumeration, CIMDatatype or other Compound classes as long as the Compound classes do not recurse.

All CIM attributes are optional in the sense that profiles using the CIM may eliminate any attributes.

Relationships between classes reveal how they are structured in terms of each other. CIM classes are related in a variety of ways, as described in 4.4.2 to 4.4.4.

4.4.2 Generalization

A generalization is a relationship between a more general and a more specific class. The more specific class can contain only additional information. Generalization provides for the specific class to inherit attributes and relationships from all the more general classes above it.

Figure 3 is an example of generalization. In this example taken from the Wires package, a Breaker is a more specific type of ProtectedSwitch, which in turn is a more specific type of Switch, which is a more specific type of ConductingEquipment, etc. A PowerTransformer is another more specific type of ConductingEquipment. Note that PowerSystemResource inherits from class IdentifiedObject which is not on the diagram. Therefore, IdentifiedObject is shown in italic type in the upper right corner of class PowerSystemResource.

Documents
Document Sharing Hub

Full document details: BS EN IEC 61970-301:2020

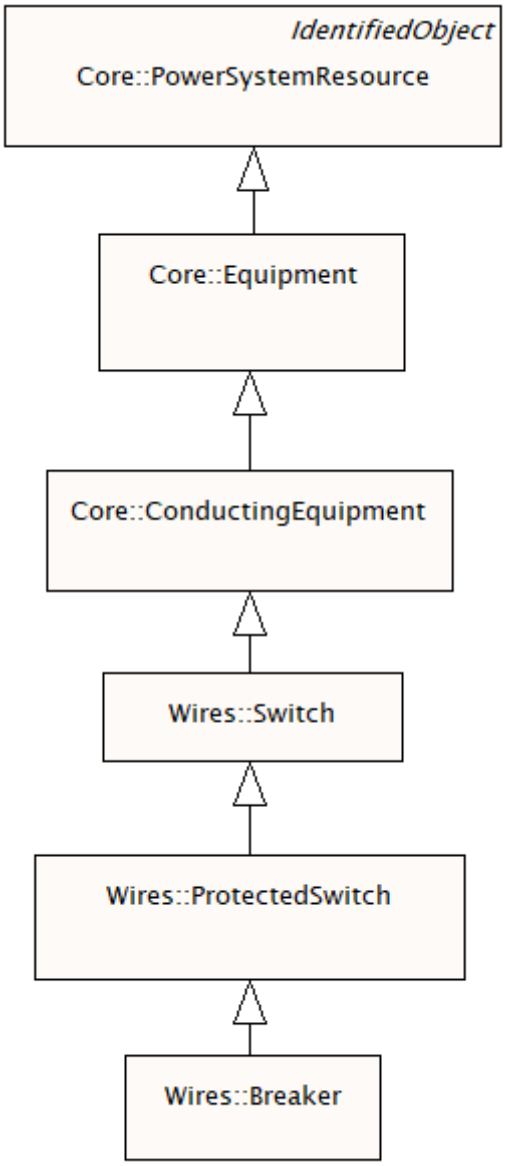

Figure 3 – Example of generalization

4.4.3 Simple association

An association is a conceptual connection between classes. Each association has two "association ends". The "association ends" were called "roles" prior to the UML 2.0 specification. Each association end describes the role the target class (i.e. the class the association end goes *to*) has in relation to the source class (i.e. the class the association end goes *from*). Association ends are usually given the name of the target class with or without a verb phrase. Each association end also has multiplicity/cardinality, which is an indication of how many objects may participate in the given relationship. In the CIM, associations are not named, only association ends are named. For example, as shown by Figure 4, in the CIM there is an association between a BaseVoltage and a VoltageLevel. Multiplicity is shown at both ends of the association. In this example, a VoltageLevel object may reference 1 BaseVoltage, and a BaseVoltage may be referenced by 0 or more VoltageLevel objects.

Documents
Document Sharing Hub
Full document details: BS EN IEC 61970-301:2020