BS EN IEC 62305-3:2024

BSI Standards Publication

Protection against lightning

Part 3: Physical damage to structures and life hazard

Documents
Document Sharing Hub

Full document details: BS EN IEC 62305-3:2024

National foreword

This British Standard is the UK implementation of EN IEC 62305-3:2024. It is identical to IEC 62305-3:2024. It supersedes BS EN 62305-3:2011, which will be withdrawn on 31 October 2027.

The UK committee advises users that the BS EN IEC 62305 third edition series should be implemented in full as it would not be safe to implement Parts 1, 3 and 4 of the third edition without having done a risk assessment in accordance with BS EN IEC 62305-2:2024.

The UK participation in its preparation was entrusted to Technical Committee GEL/81, Protection against lightning.

A list of organizations represented on this committee can be obtained on request to its committee manager.

Contractual and legal considerations

This publication has been prepared in good faith, however no representation, warranty, assurance or undertaking (express or implied) is or will be made, and no responsibility or liability is or will be accepted by BSI in relation to the adequacy, accuracy, completeness or reasonableness of this publication. All and any such responsibility and liability is expressly disclaimed to the full extent permitted by the law.

This publication is provided as is, and is to be used at the recipient's own risk.

The recipient is advised to consider seeking professional guidance with respect to its use of this publication.

This publication is not intended to constitute a contract. Users are responsible for its correct application.

© The British Standards Institution 2025
Published by BSI Standards Limited 2025

ISBN 978 0 580 90438 7

ICS 29.020; 91.120.40

Compliance with a British Standard cannot confer immunity from legal obligations.

This British Standard was published under the authority of the Standards Policy and Strategy Committee on 28 February 2025.

Amendments/corrigenda issued since publication

Date	Text affected

Documents
Document Sharing Hub

Full document details: BS EN IEC 62305-3:2024

EUROPEAN STANDARD

NORME EUROPÉENNE

EUROPÄISCHE NORM

EN IEC 62305-3

October 2024

ICS 29.020; 91.120.40

Supersedes EN 62305-3:2011

English Version

Protection against lightning - Part 3: Physical damage to structures and life hazard (IEC 62305-3:2024)

Protection contre la foudre - Partie 3: Dommages physiques sur les structures et risques humains (IEC 62305-3:2024)

Blitzschutz - Teil 3: Schutz von baulichen Anlagen und Personen (IEC 62305-3:2024)

This European Standard was approved by CENELEC on 2024-10-17. CENELEC members are bound to comply with the CEN/CENELEC Internal Regulations which stipulate the conditions for giving this European Standard the status of a national standard without any alteration.

Up-to-date lists and bibliographical references concerning such national standards may be obtained on application to the CEN-CENELEC Management Centre or to any CENELEC member.

This European Standard exists in three official versions (English, French, German). A version in any other language made by translation under the responsibility of a CENELEC member into its own language and notified to the CEN-CENELEC Management Centre has the same status as the official versions.

CENELEC members are the national electrotechnical committees of Austria, Belgium, Bulgaria, Croatia, Cyprus, the Czech Republic, Denmark, Estonia, Finland, France, Germany, Greece, Hungary, Iceland, Ireland, Italy, Latvia, Lithuania, Luxembourg, Malta, the Netherlands, Norway, Poland, Portugal, Republic of North Macedonia, Romania, Serbia, Slovakia, Slovenia, Spain, Sweden, Switzerland, Türkiye and the United Kingdom.

European Committee for Electrotechnical Standardization
Comité Européen de Normalisation Electrotechnique
Europäisches Komitee für Elektrotechnische Normung

CEN-CENELEC Management Centre: Rue de la Science 23, B-1040 Brussels

© 2024 CENELEC All rights of exploitation in any form and by any means reserved worldwide for CENELEC Members.

Ref. No. EN IEC 62305-3:2024 E

AVA Documents Document Sharing Hub

Full document details: BS EN IEC 62305-3:2024

European foreword

The text of document 81/764/FDIS, future edition 3 of IEC 62305-3, prepared by TC 81 "Lightning protection" was submitted to the IEC-CENELEC parallel vote and approved by CENELEC as EN IEC 62305-3:2024.

The following dates are fixed:

- latest date by which the document has to be implemented at national level by publication of an identical national standard or by endorsement (dop) 2025-10-31
- latest date by which the national standards conflicting with the document have to be withdrawn (dow) 2027-10-31

This document supersedes EN 62305-3:2011 and all of its amendments and corrigenda (if any).

Attention is drawn to the possibility that some of the elements of this document may be the subject of patent rights. CENELEC shall not be held responsible for identifying any or all such patent rights.

Any feedback and questions on this document should be directed to the users' national committee. A complete listing of these bodies can be found on the CENELEC website.

Endorsement notice

The text of the International Standard IEC 62305-3:2024 was approved by CENELEC as a European Standard without any modification.

In the official version, for Bibliography, the following notes have to be added for the standard indicated:

IEC 61400-24	NOTE	Approved as EN IEC 61400-24
ISO 1182	NOTE	Approved as EN ISO 1182
ISO 11925-2	NOTE	Approved as EN ISO 11925-2
IEC 60071-2	NOTE	Approved as EN IEC 60071-2
IEC 60079-17	NOTE	Approved as EN IEC 60079-17
IEC 62858	NOTE	Approved as EN IEC 62858

Documents
Document Sharing Hub

Full document details: BS EN IEC 62305-3:2024

Annex ZA
(normative)

Normative references to international publications with their corresponding European publications

The following documents are referred to in the text in such a way that some or all of their content constitutes requirements of this document. For dated references, only the edition cited applies. For undated references, the latest edition of the referenced document (including any amendments) applies.

NOTE 1 Where an International Publication has been modified by common modifications, indicated by (mod), the relevant EN/HD applies.

NOTE 2 Up-to-date information on the latest versions of the European Standards listed in this annex is available here: www.cencenelec.eu.

Publication	Year	Title	EN/HD	Year
IEC 60079-10-1	2020	Explosive atmospheres - Part 10-1: Classification of areas - Explosive gas atmospheres	EN IEC 60079-10-1	2021
IEC 60079-10-2	2015	Explosive atmospheres - Part 10-2: Classification of areas - Explosive dust atmospheres	EN 60079-10-2	2015
IEC 60079-14	-	Explosive atmospheres - Part 14: Electrical installation design, selection and installation of equipment, including initial inspection	EN IEC 60079-14	-
IEC 60364-5-53	-	Low-voltage electrical installations -- Part 5-53: Selection and erection of electrical equipment - Protection, isolation, switching, control and monitoring	-	-
IEC 61643-11	-	Low-voltage surge protective devices - Part 11: Surge protective devices connected to low-voltage power systems - Requirements and test methods	EN 61643-11	-
IEC 61643-21	-	Low voltage surge protective devices - Part 21: Surge protective devices connected to telecommunications and signalling networks - Performance requirements and testing methods	EN 61643-21	-
IEC 62305-1	2024	Protection against lightning - Part 1: General principles	EN IEC 62305-1	2024
IEC 62305-2	2024	Protection against lightning - Part 2: Risk management	EN IEC 62305-2	2024
IEC 62305-4	2024	Protection against lightning - Part 4: Electrical and electronic systems within structures	EN IEC 62305-4	2024
IEC 62561	series	Lightning protection system components (LPSC) - Part 1: Requirements for connection components	EN IEC 62561	series

Documents
Document Sharing Hub

Full document details: BS EN IEC 62305-3:2024

Publication	Year	Title	EN/HD	Year
IEC 62561-1	2017	Lightning protection system components (LPSC)	EN 62561-1	2017
IEC/TS 62561-8	2018	Lightning protection system components (LPSC) - Part 8: Requirements for components for isolated LPS	-	-
ISO 3864-1	-	Graphical symbols - Safety colours and safety signs - Part 1: Design principles for safety signs and safety markings	-	-

Documents
Document Sharing Hub

Full document details: BS EN IEC 62305-3:2024

CONTENTS

FOREWORD 7
INTRODUCTION 10
1 Scope 12
2 Normative references 12
3 Terms and definitions 13
4 Lightning protection system (LPS) 18
4.1 Class of LPS 18
4.2 Design of the LPS 19
5 External lightning protection system 19
5.1 General 19
5.1.1 Application of an external LPS 19
5.1.2 Application of an isolated LPS or an electrically insulated LPS 19
5.1.3 Use of natural components 20
5.2 Air-termination systems 20
5.2.1 General 20
5.2.2 Positioning 20
5.2.3 Air terminations against flashes to the side of tall structures 25
5.2.4 Construction 26
5.2.5 Natural components 26
5.3 Down-conductor systems 29
5.3.1 General 29
5.3.2 Positioning of an isolated LPS 29
5.3.3 Positioning of an attached LPS 29
5.3.4 Construction 30
5.3.5 Natural components 32
5.3.6 Test joints and test points 33
5.4 Earth-termination system 33
5.4.1 General 33
5.4.2 Earthing arrangement in general conditions 33
5.4.3 Installation of earth electrodes 35
5.4.4 Natural earth electrodes 36
5.5 Components 36
5.5.1 General 36
5.5.2 Fixing 37
5.5.3 Connections 38
5.5.4 Components of an electrically insulated LPS 38
5.6 Materials and dimensions 38
5.6.1 Materials 38
5.6.2 Dimensions 38
6 Internal lightning protection system 41
6.1 General 41
6.2 Lightning equipotential bonding 41
6.2.1 General 41
6.2.2 Lightning equipotential bonding for metal installations 42
6.2.3 Lightning equipotential bonding for external conductive parts 43
6.2.4 Lightning equipotential bonding for internal systems 43

AVA Documents
Document Sharing Hub

6.2.5 Lightning equipotential bonding for lines connected to the structure to be protected ... 44
6.3 Separation distance ... 45
6.3.1 General approach ... 45
6.3.2 Simplified approach ... 46
7 Maintenance and inspection of an LPS ... 47
7.1 General ... 47
7.2 Maintenance ... 47
7.3 Objective of inspections ... 47
7.4 Need for inspection ... 48
8 Protection measures against injury to human beings due to touch and step voltages ... 48
8.1 Protection measures against touch voltages ... 48
8.2 Protection measures against step voltages ... 49
Annex A (normative) Minimum cross-section of the entering cable screen to avoid dangerous sparking ... 50
Annex B (informative) Evaluation of the separation distance s ... 51
Annex C (normative) Additional requirements for LPSs in the case of structures with a risk of explosion ... 56
C.1 General ... 56
C.2 Basic requirements ... 56
C.2.1 General ... 56
C.2.2 Required information ... 56
C.2.3 Earthing ... 56
C.3 Structures containing solid explosive material ... 57
C.4 Structures with hazardous areas ... 57
C.4.1 General ... 57
C.4.2 Structures with Zones 2 and 22 ... 58
C.4.3 Structures with Zones 1 and 21 ... 58
C.4.4 Structures with Zones 0 and 20 ... 58
C.4.5 Specific applications ... 58
C.5 Maintenance and inspection ... 59
Annex D (informative) Explanatory text concerning the design, construction, maintenance and inspection of lightning protection systems ... 60
D.1 General ... 60
D.2 Structure of Annex D ... 60
D.3 Additional information ... 60
D.4 Design of lightning protection systems (LPSs) ... 60
D.4.1 General remarks ... 60
D.4.2 Design of the LPS ... 62
D.5 External lightning protection system ... 66
D.5.1 General ... 66
D.5.2 Air-termination systems ... 67
D.5.3 Down-conductor systems ... 87
D.5.4 Earth-termination systems ... 108
D.5.5 Components ... 117
D.5.6 Materials and dimensions ... 117
D.6 Internal lightning protection system ... 122
D.6.1 General ... 122

AVA Documents
Document Sharing Hub
Full document details: BS EN IEC 62305-3:2024

D.6.2 Lightning equipotential bonding (EB) ... 122
D.6.3 Electrical isolation of the external LPS ... 128
D.6.4 Protection against effects of induced currents in internal systems ... 132
D.7 Maintenance and inspection of the LPS ... 132
D.7.1 General ... 132
D.7.2 Inspection ... 132
D.7.3 Testing ... 134
D.7.4 Maintenance ... 135
Bibliography ... 136

Figure 1 – Protection angle corresponding to the class of LPS ... 22
Figure 2 – Contacting the rolling sphere with the structure to be protected ... 23
Figure 3 – Application of the protection angle method ... 24
Figure 4 – Loop in a down conductor ... 31
Figure 5 – Minimum length l_1 of each earth electrode according to the class of LPS ... 34
Figure B.1 – Values of coefficient k_C in the case of a wire air-termination system ... 51
Figure B.2 – Values of coefficient k_C in the case of a multiple down-conductor system ... 52
Figure B.3 – Values of coefficients k_C in the case of multiple down conductors with an interconnecting ring of down conductors at each level ... 53
Figure B.4 – Values of coefficient k_C in the case of a meshed air-termination system, with a multiple down-conductor system ... 54
Figure D.1 – LPS design flow diagram ... 61
Figure D.2 – Space protected by two parallel air-termination horizontal wires or two air-termination rods ($r > d/2$) ... 69
Figure D.3 – Designing the protection volume of catenary wire ... 70
Figure D.4 – Horizontal section of the protected area at a given height ... 71
Figure D.5 – Three examples of design of attached LPS air termination according to the mesh method air-termination design ... 73
Figure D.6 – Lateral protected volume constructed from the rolling sphere and the lateral protection angle methods near the height equal to the radius of the sphere ... 74
Figure D.7 – Application of the protection angle method for lateral impact with heights up to 60 m ... 75
Figure D.8 – Air termination and visually concealed conductors for buildings less than 20 m high with sloping roofs ... 76
Figure D.9 – Construction of an LPS using natural components on the roof of the structure ... 78
Figure D.10 – Positioning of the external LPS on a structure made of insulating material (e.g. wood or bricks) with a height up to 60 m with flat roof and with roof fixtures ... 79
Figure D.11 – Connection of natural air-termination rod to air-termination conductor ... 81
Figure D.12 – Construction of the bridging between the segments of the metallic facade plates ... 82
Figure D.13 – Air-termination rod used for protection of a metallic roof fixture with electric power installations which are not bonded to the air-termination system ... 83
Figure D.14 – Method of achieving electrical continuity on metallic parapet capping ... 84
Figure D.15 – Examples of air termination for a house with an antenna using an attached LPS ... 86

AVA Documents
Document Sharing Hub
Full document details: BS EN IEC 62305-3:2024

Figure D.16 – Installation of external LPS on a structure of insulating material with different roof levels 90
Figure D.17 – LPS design for a cantilevered part of a structure 91
Figure D.18 – Use of a metallic facade covering as a natural down-conductor system on a structure of steel-reinforced concrete 93
Figure D.19 – Use of metallic facade as natural down-conductor system and connection of facade supports 94
Figure D.20 – Connection of the continuous strip windows to a metal facade covering 95
Figure D.21 – Measuring the overall electrical resistance of steel reinforcement 96
Figure D.22 – Equipotential bonding in a structure with a steel reinforcement 98
Figure D.23 – Typical methods of joining reinforcing rods in concrete (where permitted) 99
Figure D.24 – Examples of clamps used as joints between reinforcing rods and conductors 100
Figure D.25 – Examples of connection points to the reinforcement in a reinforced concrete wall 101
Figure D.26 – Internal down conductors in industrial structures 104
Figure D.27 – Installation of bonding conductors on plate-like prefabricated reinforced concrete parts by means of bolted or welded conductor links 106
Figure D.28 – Installation of bonding conductors in reinforced concrete structures and flexible bonds between two reinforced concrete parts 107
Figure D.29 – Combined foundation earth electrode 112
Figure D.30 – Construction of foundation earth ring for structures of different foundation design 113
Figure D.31 – Example of a Type A earthing arrangement with a vertical conductor type electrode 114
Figure D.32 – Example of a Type A earthing arrangement with a vertical rod type electrode 115
Figure D.33 – Meshed earth-termination system of a plant 118
Figure D.34 – Example of an equipotential bonding arrangement 124
Figure D.35 – Example of bonding arrangement in a structure with multiple entry points of external conductive parts using a ring electrode for interconnection of bonding bars 125
Figure D.36 – Example of bonding in the case of multiple entry points of external conductive parts and an electric power or communication line, using an internal ring conductor for interconnection of the bonding bars 126
Figure D.37 – Example of bonding arrangement in a structure with multiple entry points of external conductive parts entering the structure above ground level 127
Figure D.38 – Directions for calculations of the separation distance, s, for a worse case lightning interception point at a distance, l, from the reference point according to 6.3 130

Table 1 – Relation between lightning protection levels (LPL) and class of LPS (see IEC 62305-1) 18
Table 2 – Values of rolling sphere radius, mesh size and protection angle corresponding to the class of LPS 21
Table 3 – Minimum thickness of metal sheets or metal pipes in air-termination systems 27
Table 4 – Maximum temperature rises ΔT (K) of inner surface and time duration t_{50} (s) for different thickness t'' (mm) and long strokes according to LPL I (Q_{LONG} = 200 C) 28
Table 5 – Preferred values of the distance between down conductors by LPS according to the class of LPS 30

AVA Documents
Document Sharing Hub
Full document details: BS EN IEC 62305-3:2024

Table 6 – LPS materials and conditions of use 37
Table 7 – Material, configuration and minimum cross-sectional area of air-termination conductors, air-termination rods, earth lead-in conductors and down conductors 39
Table 8 – Material, configuration and minimum dimensions of earth electrodes 40
Table 9 – Minimum dimensions of conductors connecting different bonding bars or connecting bonding bars to the earth-termination system 42
Table 10 – Minimum dimensions of conductors connecting internal metal installations to the bonding bar 42
Table 11 – Separation distance – Values of coefficient k_i 45
Table 12 – Separation distance – Values of coefficient k_m 45
Table 13 – Separation distance – Approximated values of coefficient k_c 47
Table A.1 – Cable length to be considered according to the condition of the screen 50
Table D.1 – Suggested fixing centres 75

Documents
Document Sharing Hub
Full document details: BS EN IEC 62305-3:2024

INTERNATIONAL ELECTROTECHNICAL COMMISSION

PROTECTION AGAINST LIGHTNING –

Part 3: Physical damage to structures and life hazard

FOREWORD

1) The International Electrotechnical Commission (IEC) is a worldwide organization for standardization comprising all national electrotechnical committees (IEC National Committees). The object of IEC is to promote international co-operation on all questions concerning standardization in the electrical and electronic fields. To this end and in addition to other activities, IEC publishes International Standards, Technical Specifications, Technical Reports, Publicly Available Specifications (PAS) and Guides (hereafter referred to as "IEC Publication(s)"). Their preparation is entrusted to technical committees; any IEC National Committee interested in the subject dealt with may participate in this preparatory work. International, governmental and non-governmental organizations liaising with the IEC also participate in this preparation. IEC collaborates closely with the International Organization for Standardization (ISO) in accordance with conditions determined by agreement between the two organizations.
2) The formal decisions or agreements of IEC on technical matters express, as nearly as possible, an international consensus of opinion on the relevant subjects since each technical committee has representation from all interested IEC National Committees.
3) IEC Publications have the form of recommendations for international use and are accepted by IEC National Committees in that sense. While all reasonable efforts are made to ensure that the technical content of IEC Publications is accurate, IEC cannot be held responsible for the way in which they are used or for any misinterpretation by any end user.
4) In order to promote international uniformity, IEC National Committees undertake to apply IEC Publications transparently to the maximum extent possible in their national and regional publications. Any divergence between any IEC Publication and the corresponding national or regional publication shall be clearly indicated in the latter.
5) IEC itself does not provide any attestation of conformity. Independent certification bodies provide conformity assessment services and, in some areas, access to IEC marks of conformity. IEC is not responsible for any services carried out by independent certification bodies.
6) All users should ensure that they have the latest edition of this publication.
7) No liability shall attach to IEC or its directors, employees, servants or agents including individual experts and members of its technical committees and IEC National Committees for any personal injury, property damage or other damage of any nature whatsoever, whether direct or indirect, or for costs (including legal fees) and expenses arising out of the publication, use of, or reliance upon, this IEC Publication or any other IEC Publications.
8) Attention is drawn to the Normative references cited in this publication. Use of the referenced publications is indispensable for the correct application of this publication.
9) IEC draws attention to the possibility that the implementation of this document may involve the use of (a) patent(s). IEC takes no position concerning the evidence, validity or applicability of any claimed patent rights in respect thereof. As of the date of publication of this document, IEC had not received notice of (a) patent(s), which may be required to implement this document. However, implementers are cautioned that this may not represent the latest information, which may be obtained from the patent database available at https://patents.iec.ch. IEC shall not be held responsible for identifying any or all such patent rights.

IEC 62305-3 has been prepared by IEC technical committee 81: Lightning protection. It is an International Standard.

This third edition cancels and replaces the second edition published in 2010. This edition constitutes a technical revision.

This edition includes the following significant technical changes with respect to the previous edition:

a) Minimum thicknesses of metal sheets or metal pipes are given in Table 4 for air-termination systems where it is necessary to prevent hot-spot problems. Maximum temperature rises ΔT (K) and time duration t_{50} (s) for different thicknesses and long strokes are also given.
b) Cross-reference to the IEC 62561 series is made for the use of reliable, stable, safe and appropriate LPS components.

Documents
Document Sharing Hub

c) The application of two methods – general and simplified – for separation distance calculation is clarified.

d) Some changes to the requirements for continuity of steel reinforcement are made.

e) Annex C is revised to address comments from IEC subcommittee 31J.

f) Revision of positioning of air-termination conductors are modified according to the three accepted methods. A more precise description of the methods for positioning of the air-termination systems is made according to the complexity of structures to be protected. The main text has been simplified, Annex A has been deleted and all detailed information has been moved to Annex D.

g) Information on the protection of green roofs is introduced in Annex D.

h) Information on the protection of protruding parts on facades of tall buildings is introduced in Annex D;

i) a new definition of “electrically insulated LPS” has been introduced to distinguish it from an LPS both electrically and physically isolated from the structure, with a slight modification of the other LPS definitions.

The text of this International Standard is based on the following documents:

Draft	Report on voting
81/764/FDIS	81/767/RVD

Full information on the voting for its approval can be found in the report on voting indicated in the above table.

The language used for the development of this International Standard is English.

This document was drafted in accordance with ISO/IEC Directives, Part 2, and developed in accordance with ISO/IEC Directives, Part 1 and ISO/IEC Directives, IEC Supplement, available at www.iec.ch/members_experts/refdocs. The main document types developed by IEC are described in greater detail at www.iec.ch/publications.

A list of all parts in the IEC 62305 series, published under the general title *Protection against lightning,* can be found on the IEC website.

The following differing practices of a less permanent nature exist in the countries indicated below.

In Austria, Annex C shall not be applied and is replaced by the National standard ÖVE/ÖNORM EN 62305-3 Beiblatt 1:2013-11-01 Blitzschutz – Teil 3: Schutz von baulichen Anlagen und Personen – Beiblatt 1: Zusätzliche Informationen für bauliche Anlagen mit explosionsgefährdeten Bereichen. In Austria, Annex C shall be classified as "Informative".

In Germany, the need for lightning protection is determined by, and the class of required LPS shall be selected according to, a national annex to the third edition of IEC 62305-1 (including an option for a risk assessment following the third edition of IEC 62305-2).

In Germany, for a metallic or electrically-continuous connected reinforced concrete framework, in addition, DIN EN 62305-3 Beiblatt 1 shall be applied.

In Germany, 8.1 condition b) is not applied – see DIN EN 62305-3 Beiblatt 1. Instead, the alternate measures, as described in DIN EN 62305-3 Beiblatt 1, shall be applied.

In Germany, for 8.2, the alternate measures, as described in DIN EN 62305-3 Beiblatt 1, shall be applied.

Documents
Document Sharing Hub

Full document details: BS EN IEC 62305-3:2024

In Japan, when using country-specific lightning protection components, the manufacturer and/or lightning protection designer shall explain that the component will withstand the electromagnetic effects of lightning currents and possible accidental stresses without damage.

In Italy, a separation distance is not required in structures with metallic or electrically-continuous connected reinforced concrete framework according to 5.3.5.

In Italy, in reinforced concrete structures, the reinforcement may be used for equipotential bonding. In this case, if a ring electrode is not yet installed and connected to the reinforcement steels, a ring conductor welded or bolted to the steel reinforcement will be installed, to which the bonding bars should be connected via welded conductors.

In the Netherlands, in some situations, special fasteners which are necessary and which are not available on the commercial market and are not tested according to IEC 62561-4 (because of a small number of required special fasteners), must comply with the lateral and axial test mentioned in IEC 62561-4. A written statement of passing these lateral and axial tests must be issued by the designer and/or the installer of the LPS and must be a part of the commissioning documents.

In South Africa, the class of required LPS shall be selected on the basis of a risk assessment of either the second edition of IEC 62305-2 or the third edition of IEC 62305-2 . This note applies also for D.4.1 and D.4.2.1.

The committee has decided that the contents of this document will remain unchanged until the stability date indicated on the IEC website under webstore.iec.ch in the data related to the specific document. At this date, the document will be

- reconfirmed,
- withdrawn, or
- revised.

IMPORTANT – The "colour inside" logo on the cover page of this document indicates that it contains colours which are considered to be useful for the correct understanding of its contents. Users should therefore print this document using a colour printer.

Documents
Document Sharing Hub

Full document details: BS EN IEC 62305-3:2024

INTRODUCTION

This part of IEC 62305 deals with the protection, in and around a structure, against physical damage and injury to human beings due to touch and step voltages.

The main and most effective measure for protection of structures and its content against physical damage is considered to be a lightning protection system (LPS). It usually consists of both external and internal lightning protection measures.

An external LPS is intended to

a) intercept a lightning flash to the structure (with an air-termination system),

b) conduct the lightning current safely towards earth (using a down-conductor system),

c) disperse the lightning current into the earth (using an earth-termination system).

NOTE The purpose of the external LPS is to protect the structure from a direct lightning strike by providing the preferred attachment points, conducting and dispersing the lightning current. It will not significantly influence the attachment process between the structure and the lightning to increase or reduce the number of direct lightning strikes (S1) to the structure.

An internal LPS prevents dangerous sparking within the structure using either equipotential bonding or a separation distance (and hence isolation) between the external LPS (as defined in 3.2) and other electrically conducting elements internal to the structure.

Main protection measures against injury to human beings due to touch and step voltages are intended to:

1) reduce dangerous current flowing through bodies by either insulating exposed conductive parts, or by increasing the surface soil resistivity, or both,

2) reduce the occurrence of dangerous touch and step voltages by either physical restrictions or warning notices, or both.

The type and location of an LPS should be carefully considered in the initial design of a new structure, thereby enabling maximum advantage to be taken of the electrically conductive parts of the structure. By so doing, design and construction of an integrated installation is made easier, the overall aesthetic aspects can be improved, and the effectiveness of the LPS can be increased at minimum cost and effort.

Access to the ground and the proper use of foundation steelwork for the purpose of forming an effective earth termination may well be impossible once construction work on a site has commenced. Therefore, soil resistivity and the nature of the earth should be considered at the earliest possible stage of a project. This information is fundamental to the design of an earth-termination system and can influence the foundation design work for the structure.

Regular consultation between LPS designers and installers, architects and builders is essential in order to achieve the best result at minimum cost.

If lightning protection is to be added to an existing structure, every effort should be made to ensure that it conforms to the principles of this document. The design of the type and location of an LPS should take into account the features of the existing structure.

When safety is involved and significant changes are made to the structure or its use changes, consideration of updating the lightning protection installation to the present edition of this document is recommended.

Documents
Document Sharing Hub

Full document details: BS EN IEC 62305-3:2024

National or local laws and regulations can provide guidance or minimum requirements on the application of this document. This includes specifying the class of a required LPS for specific applications without a risk assessment, the conditions of separation and bonding of other earth-termination systems, the additional information given in Annex C for LPSs in case of structures with a risk of explosion, and the mandatory requirements for inspection, testing and maintenance of LPSs given in Clause 7.

Documents
Document Sharing Hub

Full document details: BS EN IEC 62305-3:2024

PROTECTION AGAINST LIGHTNING –

Part 3: Physical damage to structures and life hazard

1 Scope

This part of IEC 62305 provides the requirements for protection of a structure against physical damage by means of a lightning protection system (LPS), and for protection against injury to human beings due to touch and step voltages in the vicinity of an LPS (see IEC 62305-1).

This document is applicable to the:

a) design, installation, inspection and maintenance of an LPS for structures without limitation of their height,

b) establishment of measures for protection against injury to human beings primarily due to touch and step voltages.

NOTE 1 Specific requirements for an LPS in structures dangerous to their surroundings due to the risk of explosion are provided in Annex C.

NOTE 2 This document is not intended to provide protection against failures of electrical and electronic systems due to overvoltages. Specific requirements for such cases are provided in IEC 62305-4.

NOTE 3 Specific requirements for the protection against lightning of wind turbines are reported in IEC 61400-24 [1][1].

NOTE 4 Specific requirements for the protection against overvoltage of photovoltaic systems are reported in IEC 61643-32 [2] and in IEC 62305-4:2024, Annex F.

2 Normative references

The following documents are referred to in the text in such a way that some or all of their content constitutes requirements of this document. For dated references, only the edition cited applies. For undated references, the latest edition of the referenced document (including any amendments) applies.

IEC 60079-10-1:2020, *Explosive atmospheres – Part 10-1: Classification of areas – Explosive gas atmospheres*

IEC 60079-10-2:2015, *Explosive atmospheres – Part 10-2: Classification of areas – Explosive dust atmospheres*

IEC 60079-14, *Explosive atmospheres – Part 14: Electrical installations design, selection and erection*

IEC 60364-5-53, *Low-voltage electrical installations – Part 5-53: Selection and erection of electrical equipment – Devices for protection for safety, isolation, switching, control and monitoring*

IEC 61643-11, *Low-voltage surge protective devices – Part 11: Surge protective devices connected to low-voltage power systems – Requirements and test methods*

[1] Numbers in square brackets refer to the Bibliography.

Documents
Document Sharing Hub

Full document details: BS EN IEC 62305-3:2024

IEC 61643-21, *Low-voltage surge protective devices – Part 21: Surge protective devices connected to telecommunications and signalling networks – Performance requirements and testing methods*

IEC 62305-1:2024, *Protection against lightning – Part 1: General principles*

IEC 62305-2:—[2], *Protection against lightning – Part 2: Risk management*

IEC 62305-4:2024, *Protection against lightning – Part 4: Electrical and electronic systems within structures*

IEC 62561 (all parts), *Lightning protection system components (LPSC)*

IEC 62561-1:2017[3], *Lightning protection system components (LPSC) – Part 1: Requirements for connection components*

IEC TS 62561-8:2018, *Lightning protection system components (LPSC) – Part 8: Requirements for components for isolated LPS*

ISO 3864-1, *Graphical symbols – Safety colours and safety signs – Part 1: Design principles for safety signs and safety markings*

3 Terms and definitions

For the purposes of this document, the terms and definitions given in IEC 62305-1, IEC 62305-2, IEC 62305-4 and IEC 60079-14 and the following apply.

ISO and IEC maintain terminology databases for use in standardization at the following addresses:

- IEC Electropedia: available at https://www.electropedia.org/
- ISO Online browsing platform: available at https://www.iso.org/obp

3.1
lightning protection system
LPS
complete system used to reduce injury to human beings and physical damage due to lightning flashes to a structure and its contents

Note 1 to entry: A lightning protection system usually consists of external and internal lightning protection systems. To protect internal systems against the effects of LEMP, measures according to IEC 62305-4 are necessary.

3.2
external lightning protection system
part of the LPS consisting of an air-termination system, a down-conductor system and an earth-termination system

[2] Third edition under preparation. Stage at the time of publication IEC FDIS 62305-2:2024.

[3] Withdrawn.

Documents
Document Sharing Hub

Full document details: BS EN IEC 62305-3:2024

3.3
isolated LPS
LPS with an air-termination system and down-conductor system positioned in such a way that the LPS has no electrical and no physical contact with the structure to be protected except at ground level for equipotential bonding and that along the complete path of the lightning current the separation distance is respected

Note 1 to entry: In an isolated LPS, dangerous sparks between the LPS and the structure are avoided.

3.4
attached LPS
LPS with an air-termination system and down-conductor system and earth-termination system positioned in such a way that the path of the lightning current can be in contact with the structure to be protected

3.5
electrically insulated LPS
LPS with an air-termination system and down-conductor system attached to the structure but positioned in such a way that the LPS has no electrical contact with the structure to be protected except at ground level for equipotential bonding and that along the complete path of the lightning current the separation distance is maintained

Note 1 to entry: In an electrically insulated LPS dangerous sparks between the LPS and the structure and partial lightning currents are avoided.

Note 2 to entry: An insulating down conductor or insulating stand-offs that meet the requirements of IEC TS 62561-8 ensure that the LPS has no direct electrical contact with the structure to be protected and ensure an adequate equivalent separation distance to avoid flashover.

3.6
internal lightning protection system
part of the LPS consisting of either lightning equipotential bonding or electrical separation from an external LPS, or both

3.7
air-termination system
part of an external LPS using metallic elements such as rods, masts, mesh conductors or catenary wires intended to intercept lightning flashes

3.8
down-conductor system
part of an external LPS intended to conduct lightning current between the air-termination system and the earth-termination system

3.9
ring conductor
conductor forming a loop around the structure and interconnecting the down conductors for distribution of lightning current among them

3.10
earth-termination system
part of an external LPS which is intended to conduct and disperse lightning current into the earth

3.11
earth electrode
part or a group of parts of the earth-termination system which provides direct electrical contact with the earth and disperses lightning current into the earth

Documents
Document Sharing Hub
Full document details: BS EN IEC 62305-3:2024

3.12
ring earth electrode
earth electrode forming a closed loop around the structure below or on the surface of the earth

3.13
foundation earth electrode
conductive part buried in the soil under a building foundation or, preferably, embedded in concrete of a building foundation, generally in the form of a closed loop or mesh

[SOURCE: IEC 60050-826:2022 [3], 826-13-08, modified – "or mesh" has been added.]

3.14
equipotential earth grid
mat consisting of an array of conductors intended for potential equalization

3.15
natural component
conductive part of a structure not installed specifically for lightning protection but that can perform the function of one or more parts of the LPS

3.16
connection component
part of an LPS used to interconnect conductors or connect conductors to other items

Note 1 to entry: Connection components also include bridging components and expansion pieces.

Note 2 to entry: A connection component is also referred to as a connector in some countries.

3.17
fixing component
part of an LPS which is used to fix the elements of the LPS to the structure to be protected

3.18
metal installation
extensive metal item in the structure to be protected that can form a path for lightning current

EXAMPLE Pipework, staircases, elevator guide rails, ventilation, heating and air-conditioning ducts, interconnected reinforcing steel, and structural metal parts.

3.19
external conductive part
metal item entering or leaving the structure to be protected and which can carry a part of the lightning current

EXAMPLE Pipework, metallic cable elements, metal ducts.

3.20
electrical system
system incorporating low-voltage power supply components

3.21
electronic system
system incorporating sensitive electronic components such as telecommunication equipment, computer, control and instrumentation systems, and power electronic installations

3.22
internal system
electrical and electronic systems within a structure

Documents
Document Sharing Hub
Full document details: BS EN IEC 62305-3:2024

3.23
lightning equipotential bonding
EB
bonding to the LPS of separated conductive parts, by direct connections or via surge protective devices, to reduce potential differences caused by lightning current

3.24
bonding bar
metal bar on which metal installations, external conductive parts, electric power and telecommunication lines and other cables can be bonded to an LPS

3.25
bonding conductor
conductor connecting separated conductive parts to an LPS

3.26
interconnected reinforcing steel
steelwork within a concrete structure which is considered electrically continuous

3.27
dangerous sparking
electrical discharge due to lightning which causes physical damage in the structure to be protected

3.28
separation distance
s
necessary distance between a conductor carrying partial lightning current and other conductive parts to avoid dangerous sparking

3.29
surge protective device
SPD
device containing at least one non-linear component, intended to limit transient overvoltages and divert surge currents

3.30
test joint
detachable bonding between down conductor and earth lead-in conductor for the measurement of earthing resistance

3.31
test point
point for the measurement of either total earthing resistance or continuity, or both, by electrical connection to a down conductor installed in an inaccessible location

3.32
class of LPS
number denoting the classification of an LPS according to the lightning protection level for which it is designed

3.33
lightning protection designer
specialist competent and skilled in the design of the LPS

3.34
LPS installer
person competent and skilled in the installation of the LPS

Documents
Document Sharing Hub
Full document details: BS EN IEC 62305-3:2024

3.35
structure with a risk of explosion
structure with hazardous areas as determined in accordance with IEC 60079-10-1 and IEC 60079-10-2 or containing explosive materials

3.36
isolating spark gap
ISG
component designed to interconnect electrically-isolated conductive sections when the potential difference between the sections exceeds the rated breakdown voltage

3.37
solid explosive material
solid chemical compound, mixture, or device with explosion as its primary or common purpose

3.38
Zone 0
area in which an explosive gas atmosphere is present continuously, or for long periods, or frequently

[SOURCE: IEC 60079-10-1:2020, 3.3.4]

3.39
Zone 1
area in which an explosive gas atmosphere is likely to occur occasionally in normal operation

[SOURCE: IEC 60079-10-1:2020, 3.3.5]

3.40
Zone 2
area in which an explosive gas atmosphere is not likely to occur in normal operation, but, if it does occur, will exist for a short period only

[SOURCE: IEC 60079-10-1:2020, 3.3.6]

3.41
Zone 20
place in which an explosive atmosphere, in the form of a cloud of combustible dust in air, is present continuously, or for long periods or frequently

[SOURCE: IEC 60079-10-2:2015, 3.25.1, modified – "explosive dust atmosphere" has been replaced with "explosive atmosphere" and "a cloud of dust in air" has been replaced with "a cloud of combustible dust in air".]

3.42
Zone 21
place in which an explosive atmosphere, in the form of a cloud of combustible dust in air, is likely to occur in normal operation occasionally

[SOURCE: IEC 60079-10-2:2015, 3.25.2, modified – "explosive dust atmosphere" has been replaced with "explosive atmosphere" and "a cloud of dust in air" has been replaced with "a cloud of combustible dust in air".]

Documents
Document Sharing Hub
Full document details: BS EN IEC 62305-3:2024

3.43
Zone 22
place in which an explosive atmosphere, in the form of a cloud of combustible dust in air, is not likely to occur in normal operation but, if it does occur, will persist for a short period only

[SOURCE: IEC 60079-10-2:2015, 3.25.3, modified – "area" has been replaced with "place", "explosive dust atmosphere" has been replaced with "explosive atmosphere" and the Note to entry has been deleted.]

3.44
sliding contact
<for floating roof tank> device that moves up and down with the floating roof for the purpose of making contact between the roof and tank shell to conduct the short and intermediate components of a lightning strike

Note 1 to entry: Common types of sliding contacts are shunts and shoes.

3.45
fixed contact
<for floating roof tank> device providing a contact between a floating roof and the tank shell installed to conduct the intermediate and long-duration current component of a lightning strike

Note 1 to entry: The most common type of fixed contact for floating roofs is a bypass conductor.

4 Lightning protection system (LPS)

4.1 Class of LPS

The characteristics of an LPS are determined by the characteristics of the structure to be protected and by the considered lightning protection level.

Four classes of LPS (I to IV), as shown in Table 1, are defined in this document, corresponding to lightning protection levels defined in IEC 62305-1.

Table 1 – Relation between lightning protection levels (LPL) and class of LPS (see IEC 62305-1)

LPL	Class of LPS
I	I
II	II
III	III
IV	IV

Each class of LPS is characterized by the following:

a) Data dependent upon the class of LPS:
   – lightning parameters (see IEC 62305-1:2024, Table 3 and Table 4);
   – rolling sphere radius, mesh size and protection angle (see 5.2.2);
   – distances between down conductors (see 5.3.3);
   – separation distance against dangerous sparking (see 6.3);
   – minimum length of earth electrodes (see 5.4.2);
   – connection components (see 5.5.3);
   – selection of SPD or ISG for lightning equipotential bonding (see 6.2).

Documents
Document Sharing Hub
Full document details: BS EN IEC 62305-3:2024

b) Factors not dependent upon the class of LPS:
- minimum thickness of metal sheets or metal pipes in air-termination systems (see 5.2.5);
- LPS materials and conditions of use (see 5.5);
- material, configuration and minimum dimensions for air terminations, down conductors and earth terminations (see 5.6) and equipotential bonding conductors connecting different bonding bars or connecting bonding bars to the earth-termination system (see Table 9);
- conductors connecting internal metal installations to the bonding bar (see Table 10);
- lightning equipotential bonding via metallic conductors.

The class of the required LPS should be selected on the basis of a risk assessment (see IEC 62305-2).

The probability of the performance of each class of LPS is given in IEC 62305-2:—, Annex B.

4.2 Design of the LPS

A technically and economically optimized design of an LPS is possible, especially if the steps in the design and construction of the LPS are coordinated with the steps in the design and construction of the structure to be protected. In particular, the design of the structure itself should utilize the natural components of the structure as parts of the LPS.

The design documentation of an LPS shall contain all the information necessary to ensure a correct and complete installation. For detailed information, see Annex D.

The LPS should be designed and installed by well-trained and expert (or certified) LPS designers and installers (see D.4.1).

The design of the class and location of the LPS for existing structures shall take into account the constraints of the existing situation.

5 External lightning protection system

5.1 General

5.1.1 Application of an external LPS

The external LPS is intended to intercept direct lightning flashes to the structure, including flashes to the side of the structure, and conduct the lightning current from the point of strike to ground. The external LPS is also intended to disperse this current into the earth without causing thermal or mechanical damage, or dangerous sparking which can trigger fire or explosions.

5.1.2 Application of an isolated LPS or an electrically insulated LPS

In most cases, the external LPS can be attached to the structure to be protected.

An isolated LPS or an electrically insulated LPS should be considered when the thermal and explosive effects at the point of strike, or on the conductors carrying the lightning current, can cause damage to the structure or to its contents (see Annex D). Typical examples include structures with combustible coverings, structures with combustible walls and areas at risk of explosion and fire.

NOTE 1 The use of an isolated LPS can be convenient where it is expected that future changes in the structure, its contents or its use will require modifications to the LPS.

Documents
Document Sharing Hub
Full document details: BS EN IEC 62305-3:2024

An isolated LPS should also be considered when the susceptibility of the contents warrants the reduction of the radiated electromagnetic field associated with the lightning current pulse in the down conductor.

An isolated LPS or an electrically insulated LPS should also be considered if partial lightning currents entering the structure can interfere with or destroy sensitive electrical or electronic equipment.

NOTE 2 See more information in IEC 62305-4.

5.1.3 Use of natural components

Natural components made of conductive materials, which will always remain in or on the structure and will not be modified (e.g. interconnected steel-reinforcement, metal framework of the structure and metal sheets) can be used as parts of an LPS. When using natural components as part of an LPS, the risk of damage to the natural components shall be considered.

Other natural components can only be considered as being additional to an LPS.

NOTE For further information, see Annex D.

5.2 Air-termination systems

5.2.1 General

The probability of lightning current penetrating a structure is decreased considerably by the presence of a properly designed air-termination system.

Air-termination systems can be composed of any combination of the following elements:

a) rods (including free-standing masts);

b) catenary wires;

c) meshed conductors.

To conform to this document, all types of air-termination systems shall be positioned in accordance with 5.2.2 and 5.2.3. All types of air terminals shall comply in full with this document.

For all types of air terminals only the real physical dimensions of the metal air-termination systems shall be used for the determination of the volume protected.

The individual air-termination rods should be connected together at roof level to ensure current division.

Radioactive air terminals are not allowed.

5.2.2 Positioning

5.2.2.1 General methods

Air-termination components installed on a structure shall be located at roof level on corners, exposed points and edges and the structure's horizontal and vertical protrusions in accordance with one or more of the following methods.

NOTE Research indicates that the probability of strikes to the vertical side of a structure of less than 60 m in height is low enough that taking it into consideration is not necessary.

Documents
Document Sharing Hub

Full document details: BS EN IEC 62305-3:2024

Acceptable methods to be used in determining the position of the air-termination system include:

– the rolling sphere method;
– the protection angle method;
– the mesh method.

The rolling sphere method is the general procedure suitable in all cases.

The protection angle method is a supplementary procedure to the rolling sphere method suitable for simple-shaped parts of buildings but it is subject to limits of air-termination height indicated in Figure 1.

The mesh method is a suitable procedure of protection where plane surfaces shall be protected.

The values for the rolling sphere radius, mesh size and protection angle for each class of LPS are given in Table 2 and Figure 1.

Detailed information on the positioning of the air-termination system is given in Annex D.

Table 2 – Values of rolling sphere radius, mesh size and protection angle corresponding to the class of LPS

	Protection method		
Class of LPS	**Rolling sphere radius r** m	**Mesh cell size w_m** m	**Protection angle α** °
I	20	5 × 5	See Figure 1 below.
II	30	10 × 10	
III	45	15 × 15	
IV	60	20 × 20	

One dimension of the mesh cell given in Table 2 can be increased by a maximum of +25 %, provided the mesh cell perimeter is not increased.

Documents
Document Sharing Hub
Full document details: BS EN IEC 62305-3:2024

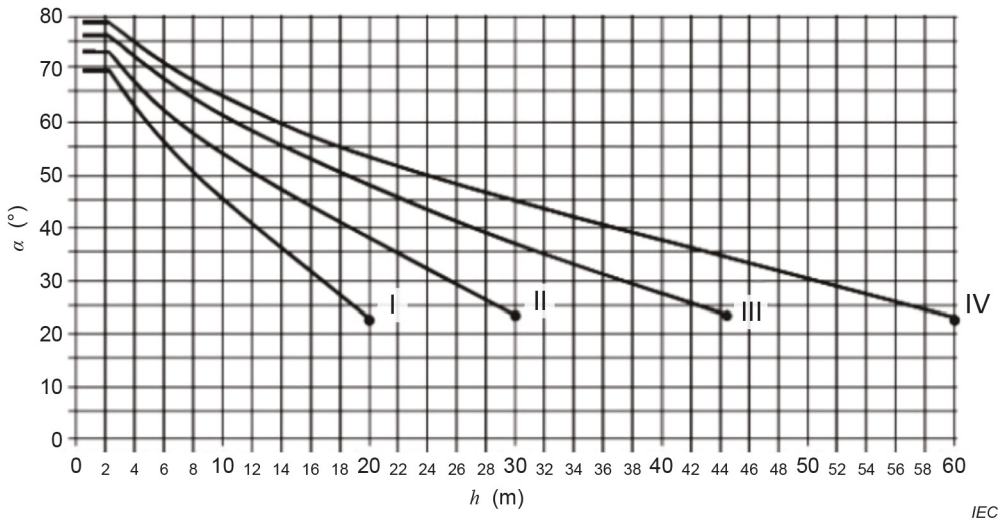

NOTE 1 The protection angle method is not applicable beyond the values marked with • in this Figure 1. Only the rolling sphere and mesh methods apply in these cases.

NOTE 2 h is the reference height of an air termination above the reference plane of the area to be protected.

NOTE 3 The angle will not change for values of h below 2 m.

Figure 1 – Protection angle corresponding to the class of LPS

5.2.2.2 Positioning of the air-termination system utilizing the rolling sphere method

Applying this method, the positioning of the air-termination system is adequate if it can prevent a fictive sphere from touching the structure to be protected when the sphere approaches from any possible direction (see Figure 2 a) and Figure 2 b)). Figure 2 a) shows the unprotected area between four air-termination points while Figure 2 b) shows the eaves of the pitched roof are not protected by the air termination on the ridge of the structure.

Documents
Document Sharing Hub
Full document details: BS EN IEC 62305-3:2024

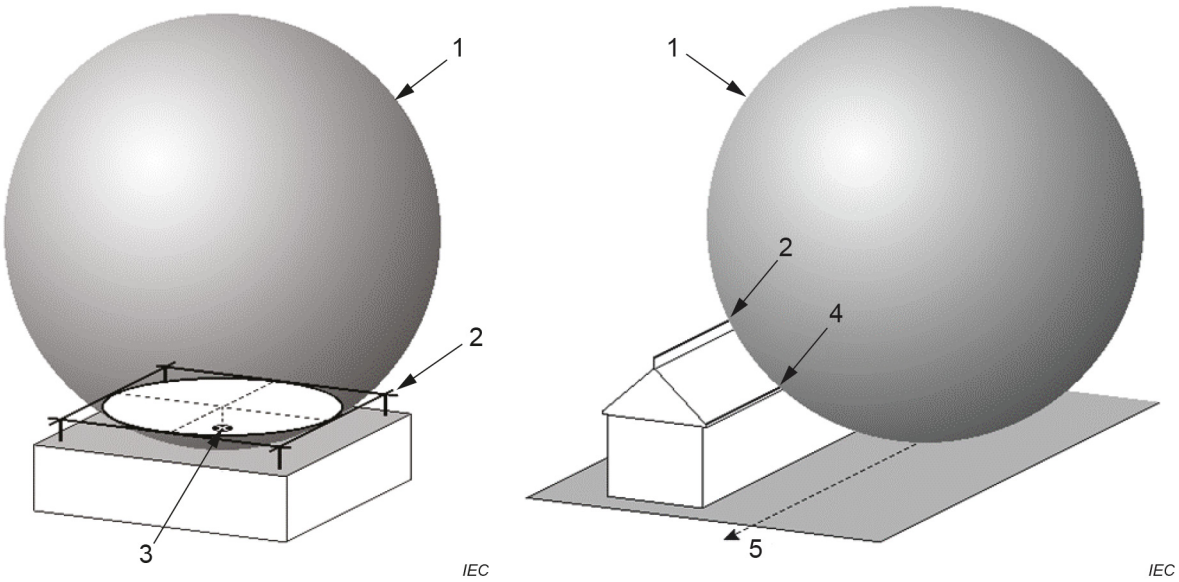

a) Unprotected area between air terminations

b) Eaves of the pitched roof not protected

Key

1 rolling sphere

2 air termination

3 contact point (shall be avoided)

4 contact line (shall be avoided)

5 rolling direction

Figure 2 – Contacting the rolling sphere with the structure to be protected

5.2.2.3 Positioning the air-termination system when utilizing the protection angle method

5.2.2.3.1 General

The position of the air-termination system is considered to be adequate if the considered part of the structure to be protected is fully situated within the protected volume provided by the air-termination system.

The protection angle depends on the class of LPS and on the reference height of the air termination as given in Table 2.

The reference height is the height between the reference plane and the top of the air termination.

The reference plane can be:

– the ground level which can be considered as the reference plane in all cases, or

– any other horizontal plane surface which is protected.

The protection angle is applicable up to, but excluding, the physical edges of an elevated reference plane, such as a roof. At the edges the protection angle appropriate to a lower reference plane such as another protected horizontal plane or the ground shall be used.

The application of the protection angle method is reported in 5.2.2.3.2.

NOTE The hypotenuse associated with the protection angle is a line approximating the appropriate curve of a rolling sphere. The reference plane is the surface on which the rolling sphere would rest.

AVA Documents Document Sharing Hub

Full document details: BS EN IEC 62305-3:2024

5.2.2.3.2 Volume protected by rod-type air termination

The volume protected by a vertical or near vertical rod is represented by a straight line rotating from the tip of the air termination around an axis perpendicular to the reference plane at an angle from this axis equal to the protection angle. The shape of the protected volume in the simple case shown in Figure 3 a) is a vertical cone or in the case involving two reference planes, two segments of cones, as shown in Figure 3 c).

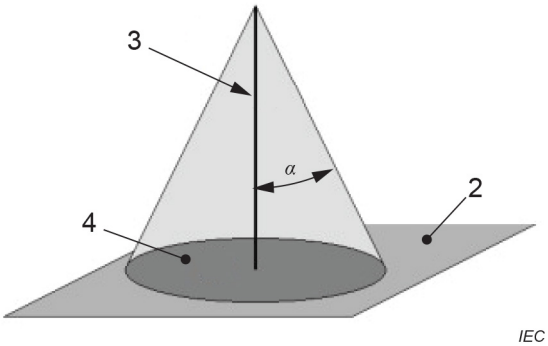

a) Protected volume of vertical rod

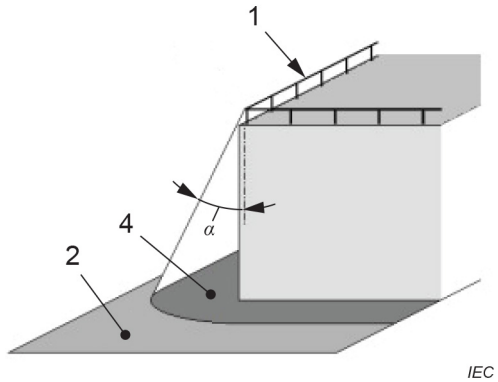

b) Protected volume of line conductor at the external side of a corner

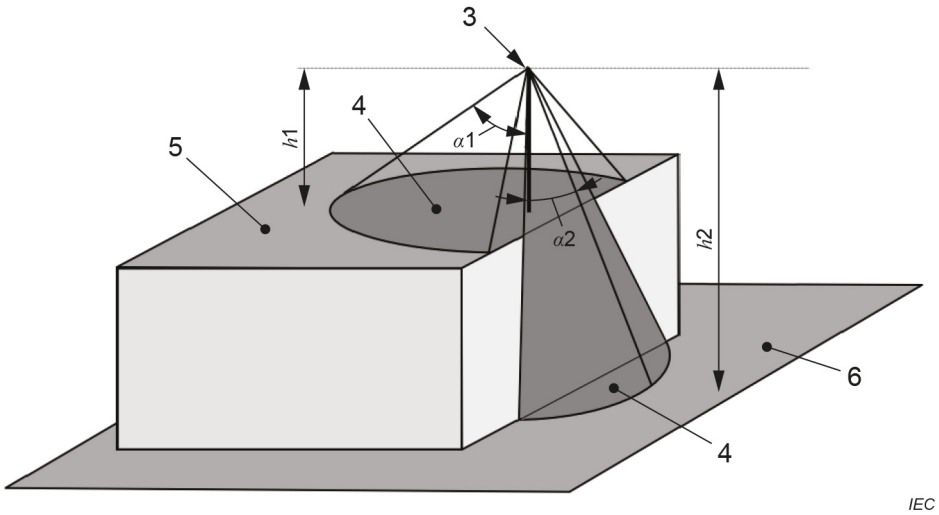

c) Protected volume of a vertical rod using different reference planes

Key

1 air-termination conductor

2 reference plane (α)

3 air-termination rod

4 protected area

5 reference plane for $h1$ ($\alpha 1$)

6 reference plane for $h2$ ($\alpha 2$)

Figure 3 – Application of the protection angle method

Documents
Document Sharing Hub
Full document details: BS EN IEC 62305-3:2024

5.2.2.3.3 Volume protected by line-type air termination

A horizontal line air termination provides a protected volume described in two parts. Along the side of a regular structure the protected volume is represented by a straight line in the plane of the protection angle, moving along the horizontal air-termination conductors, and containing the protection angle. At a corner it is represented by a quarter of a cone with the semi-angle equal to the protection angle, having its base in the reference plane. An example of the protected volume is given in Figure 3 b).

5.2.2.4 Positioning of the air-termination system utilizing the mesh method

For the purposes of protecting flat surfaces, a mesh system is considered to protect the whole surface provided all of the following conditions are fulfilled:

a) Air-termination conductors are positioned
   - on roof edge lines,
   - on roof overhangs,
   - on roof ridge lines, if the slope of the roof exceeds 1/10.

   NOTE 1 The mesh method is suitable for horizontal and inclined roofs.

   NOTE 2 The mesh method is suitable for lateral surfaces to protect against flashes to the side of the structure.

b) The mesh dimensions meet the values given in Table 2.

   NOTE 3 Damage to a mesh air termination due to snow slabs on roofs with a slope exceeding 1/10 is minimized by the use of parallel air-termination conductors instead of a mesh with a spacing between the conductors not greater than the required mesh width. Subclause 6.3.1 provides a general approach to calculate the separation distance. See a more detailed explanation in D.5.2.2.4.

c) The network of the air-termination system is constructed in such a way that the lightning current will always encounter at least two distinct metal routes to the earth termination.

d) No installation protrudes outside the volume protected by air-termination systems.

   NOTE 4 Further information can be found in Annex D.

e) Metal installations at earth potential on the surface of the roof are required to be protected by an air termination if they do not meet the requirements for a natural air termination.

f) The air-termination conductors follow, as far as possible, the shortest and most direct route.

   NOTE 5 Air terminations installed below the highest probable water level can cause damages.

5.2.3 Air terminations against flashes to the side of tall structures

Lateral impacts of flashes to the side of tall structures are considered as negligible for structures up to 60 m in height measured from ground level. However, elements significantly protruding the facade can be endangered (e.g. balconies, cameras, antennas).

On structures taller than 60 m, flashes to the side can occur, especially to protruding parts, and to corners and edges of facades.

NOTE 1 In general, the risk due to these flashes is low because only a few per cent of all flashes to tall structures will be to the side and their parameters are significantly lower than those of flashes to the top of structures. However, electrical and electronic equipment on walls outside structures can be destroyed even by lightning flashes with low current peak values.

An air-termination system shall be installed to protect significant protrusions (such as balconies, viewing platforms) on vertical surfaces on the upper part of tall structures (i.e. typically the topmost 20 % of the height of the structure), as well as the equipment installed on them (see Annex D). For parts of the upper 20 % that do not exceed 60 m above ground level, protection of the vertical surface is optional.

NOTE 2 Elements protruding through the facade of structures up to 60 m in height are rarely endangered.

AVA Documents
Document Sharing Hub

Full document details: BS EN IEC 62305-3:2024

NOTE 3 In the United States ground level is also called local grade.

NOTE 4 More information on the protection of protruding parts on tall structures is given in Annex D.

5.2.4 Construction

The air terminations of an attached LPS shall be installed as follows.

- If the roof is made of non-combustible material, the air-termination conductors can be positioned on the surface of the roof.

  NOTE 1 Criteria for non-combustible material is given in ISO 1182 [4] as class A1, A2.

  NOTE 2 Examples of non-combustible building elements are steel frame walls with masonry in-fill, brickwork, blockwork, ceramic tiles, metal sheathing, built-up roof with gravel, seamed metal panels, concrete slabs, steel and glass.

- If the roof is made of normal-flammable material, the air-termination conductors can be positioned on the surface of the roof, provided their temperature rise due to the passage of lightning current is not dangerous for the material of the roof.

  NOTE 3 Criteria for normal-flammable material, class B through class E follow ISO 11925-2 [5], with reference for classification to EN 13501-1 [6].

  NOTE 4 Examples of normal-flammable building elements are wooden rafters, wooden-framed walls, floors, roof deck, wooden sheets and single-ply plastic membranes.

  NOTE 5 For temperature rise see IEC 62305-1:2024, Table D.3.

- Adequate distance shall be maintained between the roof made of easily-flammable material and the air-termination conductors. For thatched roofs, where no steel bars are used for mounting of the reed, a distance of at least 0,15 m is adequate. For other easily-flammable materials, a distance not lower than 0,10 m is considered adequate.
- Easily-flammable parts of the structure to be protected shall not remain in direct contact with the conductors of an external LPS and shall not remain directly under any metallic roofing membrane that can be punctured by a lightning flash (see 5.2.5).

  NOTE 6 Criteria for easily-flammable material, class F, follow ISO 11925-2, with reference for classification to EN 13501-1.

  NOTE 7 Examples of easily-flammable parts of the structure are those made of textile materials, wood (thinner than 3 mm) or paper.

  NOTE 8 National rules regulating construction work and the erection of structures are sometimes used as other criteria to describe non-, normal- and easily-flammable materials.

Account shall also be taken of less flammable membranes such as wooden sheets (see also D.5.2.4).

5.2.5 Natural components

Natural components can be of high technical benefit for lightning protection, for example by reducing induction effects and reducing the necessary separation distance.

The use of natural components can give rise to damage, hot spot or ignition problems. The suitability of natural components as LPS shall be considered if the temperature rise of the inner surface at the point of strike does not constitute a danger. Hot spot or ignition problems can be less likely to occur when the metal sheets lie inside an LPZ 0_B or higher. For the LPZ concept refer to IEC 62305-1.

Documents
Document Sharing Hub

Full document details: BS EN IEC 62305-3:2024

The following parts of a structure should be considered and can be used as natural air-termination components in accordance with 5.1.3.

a) Metal sheets covering the structure to be protected provided that the electrical current path has been made durable for transferring the lightning current (e.g. by means of brazing, welding, crimping, seaming, screwing or bolting). Any connection not tested on the basis of IEC 62561-1 shall be evaluated by the designer and the installer of the LPS for its ability to perform as a natural air-termination. This risk can be evaluated and assessed by analysing the physical effects of lightning, described in IEC 62305-1.

   A type test based on IEC 62561-1:2017[4] shall include at least:

   i) a reference to IEC 62561-1:2017, 6.3 relating to ageing (exceptions can be insulated coated material as well as the usage in concrete or material indoors);

   ii) a reference to IEC 62561-1:2017, 6.4 relating to lightning impulse current criteria a) and b);

   iii) description of the method and the connection configuration in which it is necessary for the connection to be made at the construction site;

   iv) description of the required qualification (if any is required). The installer on site shall have the qualification to repeat the quality of the test sample;

   v) description of all materials and dimensions of the connection including the natural conductors;

      – the thickness of the metal sheet is not less than the value t' given in Table 3 if it is not important to prevent puncture of the sheeting or to consider ignition of any readily- combustible materials or explosive atmosphere underneath;

      – the thickness of the metal sheet is not less than the value t given in Table 3 if it is necessary to take precautions against puncture;

      – the thickness of the metal sheet is not less than the value t'' given in Table 4 if it is necessary to take precautions against puncture and to consider hot spot problems;

      – they are not coated with insulating material;

         • for interception purposes, a thin coating of protective paint (max. 0,2 mm) or thin coating of PVC (max. 0,5 mm), or asphalt (max. 1 mm) is not regarded as insulator – it will be penetrated at the point of strike;

         • for electrical continuity purposes a thin coating of protective paint (max. 0,2 mm) is not regarded as insulator – it will be penetrated at the contact area of the connection. However, such a thin coating may cause arcing.

Table 3 – Minimum thickness of metal sheets or metal pipes in air-termination systems

Class of LPS	Material	Thickness[a] t mm	Thickness[b] t' mm
I to IV	Lead	–	2,0
	Steel (stainless, galvanized)	4	0,5
	Titanium	4	0,5
	Copper	5	0,5
	Aluminium	7	0,65
	Zinc	–	0,7

[a] t prevents puncture.

[b] t' applies if it is not important to prevent puncture, hot spot or ignition problems.

[4] Withdrawn.

Documents
Document Sharing Hub
Full document details: BS EN IEC 62305-3:2024

Table 4 – Maximum temperature rises ΔT (K) of inner surface and time duration t_{50} (s) for different thickness t'' (mm) and long strokes according to LPL I (Q_{LONG} = 200 C)

Metal	Maximum temperature rises ΔT K					t_{50} [a] s
	For thickness t'' of 3 mm	For thickness t'' of 4 mm	For thickness t'' of 5 mm	For thickness t'' of 6 mm	For thickness t'' of 7 mm	
Copper	1 050	890	670	520	430	0,65
Brass	860	730	550	400	290	0,80
Aluminium	640	630	590	520	440	0,95
Steel (St37)	1 430	1 080	830	660	520	3,6
Stainless steel (V2A)	1 360	940	620	410	290	8,0

NOTE 1 The values given in this table are only valid to process equipment operating near atmospheric pressure. In practice this precludes application to items other than tanks.

NOTE 2 If the metals are coated with a thermally insulating material at the inner surface, the temperatures do not exceed 200 °C for sheets with at least 4 mm thickness and 260 °C for sheets with 3 mm thickness. The coating can consist of polytetrafluoroethylene (PTFE) or rubber with 2 mm thickness.

[a] t_{50} indicates that a value of 50 % of the given maximum temperature rise is exceeded for the given time. The given time is a typical time valid for all thicknesses of the sheets.

b) Metal components of roof construction (trusses, interconnected reinforcing steel, etc.), underneath non-metallic roofing, provided any damage to this non-metallic roofing is acceptable.

c) Metal parts such as ornamentation, railings, coverings of parapets, with cross-sections not less than that specified for standard air-termination components.

d) Metal pipes and tanks on the roof, provided that they are constructed of material with thicknesses and cross-sections in accordance with Table 7.

e) Metal pipes and tanks carrying readily-combustible or explosive mixtures, provided that they are constructed of material with a thickness not less than the appropriate value of t given in Table 3 and that the temperature rise of the inner surface at the point of strike (see Table 4) does not constitute a danger (for detailed information, see Annex C).

If the conditions for thickness are not fulfilled, the pipes and tanks shall be included in the protected volume.

Piping and tanks carrying readily-combustible or explosive mixtures (e.g. pipes or ducts of exhaust or extraction systems) shall not be considered as an air-termination natural component if the gasket in the flange sides is neither metallic nor otherwise properly bonded.

The possibility of puncture and material loss caused by a direct strike should be considered because of reduction in the compressive strength of the pipe.

NOTE CLC/TS 50703-1 [7] includes requirements for metal sheet joint tests in Europe.

Documents
Document Sharing Hub
Full document details: BS EN IEC 62305-3:2024

5.3 Down-conductor systems

5.3.1 General

To reduce the probability of damage due to lightning current flowing in the LPS, the down conductors shall be arranged in such a way that from the point of strike to earth:

a) several parallel current paths exist;

b) the length of the current paths is kept to a minimum;

c) equipotential bonding to conducting parts of the structure is performed according to the requirements of 6.2.

NOTE 1 Lateral connection of down conductors is considered good practice.

The geometry of the down conductors and of the ring conductors affects the separation distance (see 6.3).

NOTE 2 The installation of as many down conductors as possible, at equal spacing around the perimeter interconnected by ring conductors, reduces the probability of dangerous sparking and facilitates the protection of internal installations (see IEC 62305-4). This condition is fulfilled in metal framework structures and in reinforced concrete structures in which the interconnected steel is electrically continuous.

Preferred values of the distance between down conductors are given in Table 5.

More information on partitioning of the lightning current amongst down conductors is given in Annex B.

5.3.2 Positioning of an isolated LPS

When positioning an isolated LPS system, the separation distance shall always be kept. The positioning of down conductors meets the minimum location requirements under the following conditions:

a) If the air termination consists of rods on a separated mast(s) not made of metal or steel reinforced concrete, at least one down conductor is required for each mast. Where masts are made of metal or steel reinforced concrete, the mast can be used as the down conductor and no additional down conductors are required.

b) If the air termination consists of catenary wires (or one wire), at least one down conductor is necessary at each supporting structure.

c) If the air termination forms a network of conductors, at least one down conductor is necessary at each supporting wire end.

5.3.3 Positioning of an attached LPS

For each attached LPS the number of down conductors shall be not less than two and should be distributed around the perimeter of the structure to be protected, subject to architectural and practical constraints.

NOTE 1 Planning of the down-conductor layout is important for structures with complex geometry.

Equal spacing of the down conductors is preferred around the perimeter of an air-termination system. Preferred values of the distance between down conductors are given in Table 5.

Documents
Document Sharing Hub

Full document details: BS EN IEC 62305-3:2024

Table 5 – Preferred values of the distance between down conductors by LPS according to the class of LPS

Class of LPS	Distances m
I	10
II	10
III	15
IV	20

A down conductor should be installed at each exposed corner of the structure, where this is possible.

NOTE 2 Further information on the application of an electrically insulated LPS, with respect to the equivalent separation distance, is under consideration. A future International standard is being developed: IEC 62561-8 [8][5].

5.3.4 Construction

The down conductors shall be installed such that, as far as practicable, they form a direct continuation of the air-termination conductors.

Down conductors shall be installed as straight and vertical as practicable, to provide the shortest and most direct path to earth; but where this is not possible, the minimum distance between any two points of a down conductor loop (1) including its fixing components (2 and 3) shall not be less than the separation distance 's' (from 6.3, using conductor length 'l' between the points). See Figure 4.

5 Under consideration.

Documents
Document Sharing Hub

Full document details: BS EN IEC 62305-3:2024

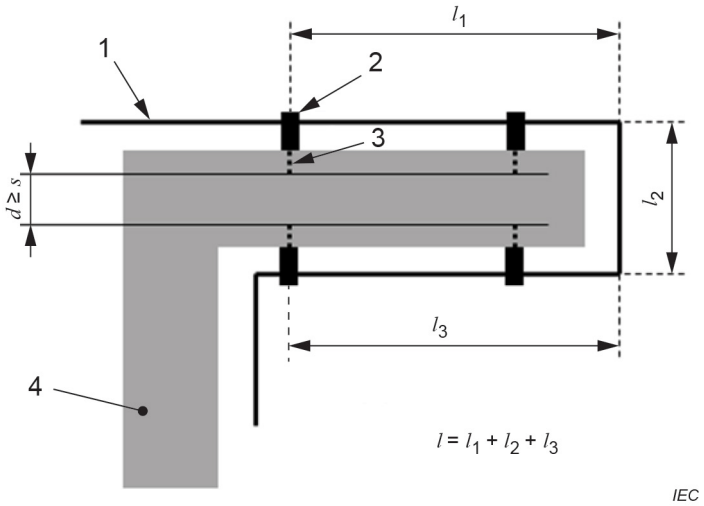

Key

1 down conductor

2 fastener

3 metal screw to fix fastener

4 structure

s separation distance

d shortest distance between conducting parts at the point of consideration

NOTE In the case of reinforced concrete the separation distance can be calculated differently.

Figure 4 – Loop in a down conductor

NOTE 1 In the United States, no bend of an LPS conductor shall form an included angle of less than 90°, nor have a bend radius less than 200 mm.

Down conductors, even if covered in insulating material, shall not be installed in gutters or down spouts.

NOTE 2 The effects of moisture in the gutters lead to intensive corrosion of the down conductor.

It is recommended that the down conductors be positioned such that a separation distance in accordance with 6.3 is provided between them and any doors and windows.

Down conductors of an LPS attached to the structure to be protected shall be installed as follows:

– if the wall is made of non-combustible material, the down conductors can be positioned on the surface or in the wall;

– if the wall is made of normal-flammable material the down conductors can be positioned on the surface of the wall, provided that their temperature rise due to the passage of lightning current is not dangerous for the material of the wall;

NOTE 3 For classification of non-combustible, normal-flammable and easily-flammable materials see 5.2.4.

NOTE 4 For temperature rise see also IEC 62305-1:2024, Table D.3

– if the wall is made of easily-flammable material and the temperature rise of down conductors is dangerous, the down conductors shall be placed in such a way that the distance between them and the wall is always greater than 0,1 m. Mounting brackets can be in contact with the wall.

When the distance from the down conductor to an easily-flammable material cannot be ensured, the cross-section of steel (regular steel and stainless steel) or thermal equivalent conductor shall be not less than 100 mm^2.

Documents
Document Sharing Hub

5.3.5 Natural components

The following parts of the structure can be used as natural down conductors:

a) the metal installations, provided that all following conditions are fulfilled:
   - the electrical current path shall be made durable against mechanical and environmental stresses, and be capable of withstanding the lightning current (e.g. by means of brazing, welding, crimping, seaming, screwing or bolting). Any natural down conductor and connections not tested according to 5.2.5 a) shall be evaluated by the designer and the installer of the LPS to assess the probability that the natural component and associated connections can withstand lightning currents at the point of installation;
   - their dimensions are at least equal to that specified in Table 7 for standard down conductors.

     Piping carrying readily-combustible or explosive mixtures (e.g. pipes or ducts of exhaust or extraction systems) shall not be considered as a down-conductor natural component if the gasket in the flange sides is neither metallic nor otherwise properly bonded.

     NOTE 1 Metal installations can be clad with insulating material or anti-corrosion coating.

     NOTE 2 In the United States, connections to metal framework used as a natural down conductor are made using bonding plates having a surface contact area of not less than 5 200 mm^2 or by welding or brazing.

b) the metal of the electrically-continuous reinforced concrete framework of the structure, provided that at least one of the following conditions is fulfilled:
   - the steelwork within reinforced concrete structures is electrically continuous, which is valid if the major interconnections of vertical and horizontal bars are welded, clamped, connected using lightning protection system components (LPSC) or overlapped and bound for a minimum length of 20 times their diameter; or otherwise securely connected (see Figure D.23);
   - the connections between reinforcement elements are specified by the designer or installer, in cooperation with the builder and the civil engineer;
   - the electrical continuity of the reinforcing bars is verified by an electrical test for structures utilizing steel-reinforced concrete (including pre-cast, pre-stressed reinforced units), where the designer or installer has not specified the connections between reinforcement elements. If it is not practical to conduct such testing, the reinforcing steel shall not be used as a natural down conductor (see D.5.3.5.2). In this case a dedicated down-conductor system shall be installed and bonded to the steel-reinforcement bars in the concrete at the top and bottom levels;

     NOTE 4 More information is given in Annex D.

   - the electrical continuity of the reinforcing steel in structures made of pre-cast reinforced concrete is ensured between individual adjacent pre-cast concrete units;
   - clamps and other connectors used to form the continuity of steelwork in reinforced concrete comply with IEC 62561-1;

     NOTE 5 For further information on the continuity of steelwork in reinforced concrete structures, see Annex D.

   With prefabricated reinforced concrete, it is important to establish interconnection points between the reinforcing elements. It is also important that reinforced concrete contains a conductive connection between the interconnection points. The individual parts should be connected on-site during assembly (see Annex D).

   NOTE 6 In the case of pre-stressed concrete, the risk of causing unacceptable mechanical consequences is present, due either to lightning current or as a result of the connection to the lightning protection system.

c) the interconnected steel framework of the structure;

   NOTE 7 Ring conductors are not necessary if the metal framework of steel structures or interconnected reinforcing steel of the structure is used as down conductors.

Documents
Document Sharing Hub

Full document details: BS EN IEC 62305-3:2024

d) the facade elements, profile rails and metallic sub-constructions of facades, provided that all following conditions are fulfilled:
   – their dimensions conform to the requirements for down conductors (see 5.6.2) and that for metal sheets or metal pipes thicknesses are not less than 0,5 mm;
   – their electrical continuity in a vertical direction conforms to the requirements of 5.5.3. Any connection not tested according to 5.2.5 a) can be used upon accepting the risk of being damaged due to lightning current and shall be evaluated by the designer and installer of the LPS.

NOTE 8 For more information, see Annex D.

5.3.6 Test joints and test points

At the connection of the earth termination, a test joint should be fitted on each down conductor, except in the case of embedded components used as down conductors combined with foundation earth electrodes.

For down conductors embedded in concrete or using other natural components only a test point is required.

For measuring purposes, the joint shall be capable of being opened with the aid of a tool. In normal use, it shall remain closed.

Test joints shall be able to conduct lightning current and to withstand the electrodynamic forces produced by the lightning current.

To fulfil the above requirements the test joints shall be tested according to 5.5.

5.4 Earth-termination system

5.4.1 General

When dealing with the dispersion of lightning current (high frequency behaviour) into the ground, whilst minimizing any potentially dangerous overvoltages, the shape and dimensions of the earth-termination system are important criteria. In general, a low earthing resistance (if possible lower than 10 Ω when measured at low frequency) of the LPS earth-termination system is recommended.

NOTE 1 Adding additional earthing electrodes or using earthing enhancing compounds according to IEC 62561-7 are methods available to reduce the earthing resistance, if necessary.

For protection against lightning, a single integrated earth-termination system is necessary and is suitable for all purposes (i.e. lightning protection, power systems and telecommunication systems, electronic and computer systems).

Earth-termination systems shall be bonded in accordance with the requirements of 6.2.

NOTE 2 Lightning equipotential bonding between the LPS earth-termination system and other earthing systems can be achieved via natural components in accordance with 5.3.5 and 5.5.3.

NOTE 3 Serious corrosion problems can occur when earthing systems made of different materials are connected to each other.

5.4.2 Earthing arrangement in general conditions

5.4.2.1 General

For the earth-termination arrangement, two basic types of earth electrode arrangements apply.

AVA Documents Document Sharing Hub

Full document details: BS EN IEC 62305-3:2024

5.4.2.2 Type A arrangement

This type of arrangement comprises horizontal or vertical earth electrodes installed outside the structure to be protected, connected to each down conductor or foundation earth electrodes, not forming a closed loop. In Type A arrangements, the total number of earth electrodes shall be not less than two.

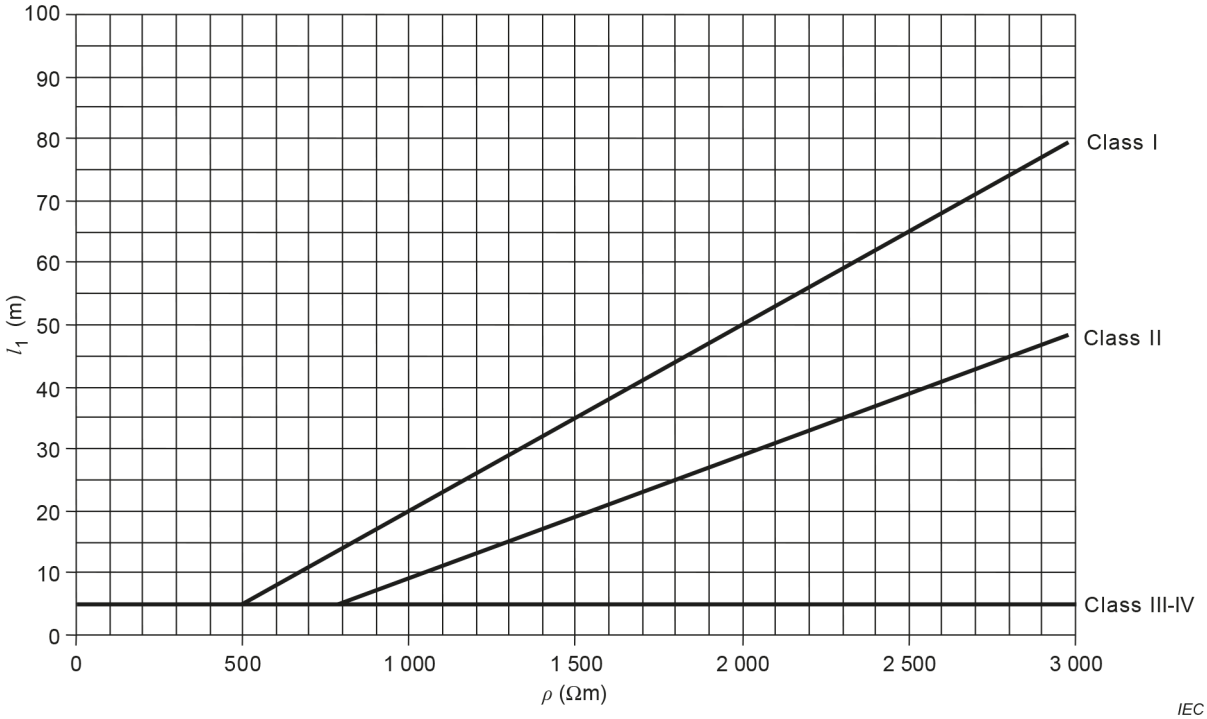

NOTE 1 Classes III and IV are independent of soil resistivity.

NOTE 2 The soil resistivity of interest is that measured to the depth to which the earth electrodes are buried.

Figure 5 – Minimum length l_1 of each earth electrode according to the class of LPS

The minimum length of each earth electrode at the base of each down conductor is

– l_1 for horizontal electrodes, or

– 0,5 l_1 for vertical (or inclined) electrodes,

where l_1 is the minimum length of each earth electrode shown in the relevant part of Figure 5.

NOTE 1 In the United States, based on the requirements of NFPA 780: Standard for the Installation of Lightning Protection Systems [9] and practical experience in the use of horizontal earth electrodes, the minimum length of horizontal earth electrodes is not required to be twice that required for vertical electrodes.

For combined (vertical or horizontal) electrodes, the total length shall be considered.

The minimum lengths stated in Figure 5 can be disregarded provided that an earthing resistance of the Type A arrangement less than 10 Ω (measured at a frequency different from the power frequency and its multiple to avoid possible interference) is achieved.

NOTE 2 When the above-mentioned requirements cannot be met, a Type B earth arrangement can be used.

NOTE 3 Reduction of earthing resistance by the extension of earth electrodes is practically convenient up to 60 m.

NOTE 4 In soil with resistivity higher than 3 000 Ω · m, Type B earth arrangements or earthing enhancing compounds are effective.

AVA Documents
Document Sharing Hub

NOTE 5 In soil with resistivity less than 200 Ω · m, earthing enhancing compounds are not effective.

NOTE 6 In soil with low resistivity, corrosion of the earth electrode can be considered. Refer to IEC 62561-7 for more information.

NOTE 7 For further information, refer to Annex D.

5.4.2.3 Type B arrangement

This type of arrangement comprises either a ring conductor external to the structure to be protected, in contact with the soil for at least 80 % of its total length, or a foundation earth electrode forming a closed loop. Such earth electrodes may also be meshed.

Although it is possible that 20 % of its total length is not in contact with the soil, the ring conductor shall always be completely connected throughout its total length.

For the ring earth electrode (or foundation earth electrode), the effective radius r_e of the area enclosed by the ring earth electrode (or foundation earth electrode) shall be not less than the value l_1 (see D.5.4.2.3.2 for details on the calculation of r_e):

$$r_e \geq l_1 \tag{1}$$

where l_1 is represented in Figure 5 according to LPS class I, II, III or IV.

When the required value of l_1 is larger than the convenient value of r_e, additional horizontal or vertical (or inclined) electrodes shall be added with individual lengths l_r (horizontal) and l_v (vertical) given by the following equations:

$$l_r = l_1 - r_e \tag{2}$$

and

$$l_v = (l_1 - r_e) / 2 \tag{3}$$

It is recommended that the number of additional electrodes should be not less than the number of the down conductors. A minimum of two additional electrodes is required.

The additional electrodes should be connected to the ring earth electrode at points where the down conductors are connected and, for as many as possible, equidistantly.

5.4.3 Installation of earth electrodes

The ring earth electrode (Type B arrangement) should preferably be buried at a depth of at least 0,5 m and at a distance of about 1 m away from the external walls.

The earth electrodes (Type A arrangement) shall be installed at a depth at least 0,5 m to the top of the electrode and distributed as uniformly as possible to minimize electrical coupling effects in the earth.

NOTE 1 If the top of a Type A earth electrode is positioned within an inspection housing, or is located below a high resistance material e.g. tarmac, then the 0,5 m requirement can be disregarded.

Earth electrodes shall be installed in such a way as to allow inspection during construction.

Documents
Document Sharing Hub

Full document details: BS EN IEC 62305-3:2024

The embedded depth and the type of earth electrodes shall be such as to minimize the effects of corrosion, soil drying and freezing to stabilize the earth resistance. The upper part of a vertical earth electrode located in the depth of drying and freezing soil should not be regarded as being effective under dry and frosty conditions. For every vertical electrode, 0,5 m should be added to the value of the length l_1, calculated in 5.4.2.2 and 5.4.2.3.

For bare solid rock, a ring-type electrode earthing arrangement is recommended.

For structures with extensive electronic systems or with high risk of fire, a Type B earthing arrangement is preferable.

In the case of a Type B arrangement foundation earthing system embedded in concrete, the earth electrode shall be correctly connected at least every 2 m with the reinforcement steel.

NOTE 2 Connection between the foundation electrode and the reinforcement steel is often made at intervals lower than 2 m for mechanical support.

NOTE 3 In Germany, foundation earthing systems are erected according to the National Standard DIN 18014 [10].

5.4.4 Natural earth electrodes

Interconnected reinforcing steel in concrete foundations in accordance with 5.6, or other suitable underground metal structures, should be used as an earth electrode. When the metallic reinforcement in concrete is used as an earth electrode, ensure the interconnections to prevent splitting of the concrete.

NOTE 1 In the case of pre-stressed concrete, the passage of lightning discharge currents can produce unacceptable mechanical stresses.

NOTE 2 If a foundation earth electrode inside waterproof concrete is used, a long-term increase in earthing resistance is possible.

NOTE 3 In the United States, reinforcing steel in concrete foundations is not the preferred electrode due to probable lack of ability to confirm interconnection quality and lack of sufficient access to the earthing system.

5.5 Components

5.5.1 General

Components of the LPS (air-termination rods, conductors, earth electrodes, connections components, isolating spark gaps, conductor fasteners, earth electrode inspection houses and electrode seals, lightning strike event counters, earthing enhancing compounds, components for isolated LPS) shall withstand the electromagnetic effects of lightning current and predictable stresses without being damaged. This shall be achieved by using components that have been successfully tested in accordance with the relevant part of the IEC 62561 series.

Components of an LPS shall be manufactured from the materials listed in Table 6 or from other materials with equivalent mechanical, electrical and chemical (corrosion) performance characteristics.

Mechanical and electrical characteristics as well as corrosion resistance properties shall meet the requirements of the IEC 62561 series.

NOTE 1 In the United States, components used shall be certified to Underwriters Laboratories Standard UL 96 [11].

NOTE 2 Components made of material other than metal can be used for fixing.

Documents
Document Sharing Hub

Full document details: BS EN IEC 62305-3:2024

Table 6 – LPS materials and conditions of use[a]

Material	Use			Corrosion		
	In open air	In earth	In concrete	Resistance	Increased by	Can be destroyed by galvanic coupling with
Copper	Solid Stranded	Solid Stranded As coating	Solid Stranded As coating	Good in many environments	Sulphur compounds Organic materials	-
Hot galvanized steel[c d e]	Solid Stranded[b]	Solid	Solid Stranded[b]	Acceptable in air, in concrete and in benign soil	High chlorides content	Copper
Steel with electro-deposited copper[f]	Solid	Solid	Solid	Good in many environments	Sulphur compounds	
Stainless steel	Solid Stranded	Solid Stranded	Solid Stranded	Good in many environments	High chlorides content	–
Aluminium[h]	Solid Stranded	Not allowed	Not allowed	Good in atmospheres containing low concentrations of sulphur and chloride	Alkaline solutions	Copper
Lead[f g]	Solid As coating	Solid As coating	Not allowed	Good in atmospheres with high concentration of sulphates	Acid soils	Copper Stainless steel

[a] This table gives general guidance only. In special circumstances, more careful corrosion immunity considerations are required (see Annex D).

[b] Stranded conductors are more vulnerable to corrosion than solid conductors. Stranded conductors are also vulnerable where they enter or exit concrete positions. This is the reason why stranded galvanized steel is not recommended in earth.

[c] Galvanized steel can be corroded in clay soil or moist soil.

[d] Galvanized steel in concrete should not extend into the soil due to possible corrosion of the steel just outside the concrete.

[e] Galvanized steel in contact with reinforcement steel in concrete should not be used in coastal areas where there can be salt in the ground water.

[f] Underground connections in soil which require removal of conductor coatings is not recommended without adequate post corrosion protection.

[g] Use of lead in the earth is often banned or restricted due to environmental concerns.

[h] To avoid corrosion, bare aluminium and aluminium alloy should not be used in direct contact with soil, gravel, limestone or lime mortar.

5.5.2 Fixing

Air terminations and down conductors shall be firmly fixed so that the electrodynamic or accidental mechanical forces (for instance wind, vibrations, slipping of slabs of snow, thermal expansion) will not cause conductors to break or loosen (see Annex D).

The conductor fasteners shall comply with IEC 62561-4.

NOTE 1 Suggested distances between fixing components are reported in Table D.1.

Documents
Document Sharing Hub

NOTE 2 In the United States, conductors are fixed to the structure upon which they are placed at intervals not exceeding 1 m.

5.5.3 Connections

The number of connections along the conductors shall be kept to a minimum.

The classes N and H of IEC 62561-1 of connection components (LPSCs – components installed specifically for lightning protection) shall be selected as follows:

– class H tested components for LPS class I and class II;

  All connections before current sharing should be performed with two connectors in parallel.

– class N tested components for LPS class III and class IV;

  All connections before current sharing should be performed with two connectors in parallel or one connector tested to class H.

Detailed calculation may also be used.

NOTE If there is a clamp with parameters corresponding to the lightning current of the class of the LPS (200 kA, 150 kA, 100 kA) tested according to IEC 62561-1, it can be installed in an LPS with the equal class of the LPS.

5.5.4 Components of an electrically insulated LPS

Insulating components, such as insulating stand-offs and insulating down conductors shall meet the requirements of IEC TS 62561-8[6].

5.6 Materials and dimensions

5.6.1 Materials

Material and its dimensions shall be chosen considering the effects of corrosion either of the structure to be protected or of the LPS and shall comply with the requirements and tests according to the IEC 62561 series.

5.6.2 Dimensions

Configurations and minimum cross-sectional areas of air-termination conductors, air-termination rods, down conductors and earth lead-in conductors are given in Table 7 and shall comply with the requirements and tests according to IEC 62561-2.

Configurations and minimum dimensions of earth electrodes are given in Table 8 and shall comply with the requirements and tests according to IEC 62561-2.

Assessment of environmental conditions (e.g. expected wind load) shall be considered during the dimensioning of air-termination rods.

[6] IEC TS 62561-8 will be replaced by a future International standard IEC 62561-8.

Documents
Document Sharing Hub

Full document details: BS EN IEC 62305-3:2024