BS EN IEC 62932-2-2:2020

BSI Standards Publication

Flow battery energy systems for stationary applications

Part 2-2: Safety requirements

Documents
Document Sharing Hub

Full document details: BS EN IEC 62932-2-2:2020

National foreword

This British Standard is the UK implementation of EN IEC 62932-2-2:2020. It is identical to IEC 62932-2-2:2020.

The UK participation in its preparation was entrusted to Technical Committee PEL/21, Secondary cells and batteries.

A list of organizations represented on this committee can be obtained on request to its secretary.

This publication does not purport to include all the necessary provisions of a contract. Users are responsible for its correct application.

© The British Standards Institution 2020
Published by BSI Standards Limited 2020

ISBN 978 0 580 92200 8

ICS 29.220.99; 29.220.20

Compliance with a British Standard cannot confer immunity from legal obligations.

This British Standard was published under the authority of the Standards Policy and Strategy Committee on 30 April 2020.

Amendments/corrigenda issued since publication

Date	Text affected

Documents
Document Sharing Hub

Full document details: BS EN IEC 62932-2-2:2020

EUROPEAN STANDARD

NORME EUROPÉENNE

EUROPÄISCHE NORM

EN IEC 62932-2-2

April 2020

ICS 29.220.99

English Version

Flow battery energy systems for stationary applications - Part 2-2: Safety requirements (IEC 62932-2-2:2020)

Systèmes de production d'énergie de batteries d'accumulateurs à circulation d'électrolyte pour applications stationnaires - Partie 2-2: Exigences de sécurité (IEC 62932-2-2:2020)

Flussbatterie-Systeme für stationäre Anwendungen - Teil 2-2: Sicherheitsanforderungen (IEC 62932-2-2:2020)

This European Standard was approved by CENELEC on 2020-03-24. CENELEC members are bound to comply with the CEN/CENELEC Internal Regulations which stipulate the conditions for giving this European Standard the status of a national standard without any alteration.

Up-to-date lists and bibliographical references concerning such national standards may be obtained on application to the CEN-CENELEC Management Centre or to any CENELEC member.

This European Standard exists in three official versions (English, French, German). A version in any other language made by translation under the responsibility of a CENELEC member into its own language and notified to the CEN-CENELEC Management Centre has the same status as the official versions.

CENELEC members are the national electrotechnical committees of Austria, Belgium, Bulgaria, Croatia, Cyprus, the Czech Republic, Denmark, Estonia, Finland, France, Germany, Greece, Hungary, Iceland, Ireland, Italy, Latvia, Lithuania, Luxembourg, Malta, the Netherlands, Norway, Poland, Portugal, Republic of North Macedonia, Romania, Serbia, Slovakia, Slovenia, Spain, Sweden, Switzerland, Turkey and the United Kingdom.

European Committee for Electrotechnical Standardization
Comité Européen de Normalisation Electrotechnique
Europäisches Komitee für Elektrotechnische Normung

CEN-CENELEC Management Centre: Rue de la Science 23, B-1040 Brussels

© 2020 CENELEC All rights of exploitation in any form and by any means reserved worldwide for CENELEC Members.

Ref. No. EN IEC 62932-2-2:2020 E

AVA Documents Document Sharing Hub

Full document details: BS EN IEC 62932-2-2:2020

European foreword

The text of document 21/1029/FDIS, future edition 1 of IEC 62932-2-2, prepared by IEC/TC 21 "Secondary cells and batteries" was submitted to the IEC-CENELEC parallel vote and approved by CENELEC as EN IEC 62932-2-2:2020.

The following dates are fixed:

- latest date by which the document has to be implemented at national level by publication of an identical national standard or by endorsement (dop) 2020-12-24
- latest date by which the national standards conflicting with the document have to be withdrawn (dow) 2023-03-24

Attention is drawn to the possibility that some of the elements of this document may be the subject of patent rights. CENELEC shall not be held responsible for identifying any or all such patent rights.

Endorsement notice

The text of the International Standard IEC 62932-2-2:2020 was approved by CENELEC as a European Standard without any modification.

In the official version, for Bibliography, the following notes have to be added for the standards indicated:

IEC 60529	NOTE	Harmonized as EN 60529
IEC 60664-1	NOTE	Harmonized as EN 60664-1
IEC 60721-3-2	NOTE	Harmonized as EN IEC 60721-3-2
IEC 60812	NOTE	Harmonized as EN IEC 60812
IEC 60900	NOTE	Harmonized as EN IEC 60900
IEC 61000 (series)	NOTE	Harmonized as EN 61000 (series)
IEC 61025	NOTE	Harmonized as EN 61025
IEC 61660-1	NOTE	Harmonized as EN 61660-1
IEC 61660-2	NOTE	Harmonized as EN 61660-2
IEC 61936-1	NOTE	Harmonized as EN 61936-1
IEC 62282-3-100	NOTE	Harmonized as EN 62282-3-100
IEC 62282-3-300	NOTE	Harmonized as EN 62282-3-300
IEC 62351 (series)	NOTE	Harmonized as EN 62351 (series)
IEC 62477-1	NOTE	Harmonized as EN 62477-1
IEC 62932-2-1	NOTE	Harmonized as EN IEC 62932-2-1[1]
ISO 13850	NOTE	Harmonized as EN ISO 13850

[1] To be published. Stage at the time of publication: FprEN IEC 62932-2-1:2019.

Documents
Document Sharing Hub

Full document details: BS EN IEC 62932-2-2:2020

Annex ZA
(normative)

Normative references to international publications with their corresponding European publications

The following documents are referred to in the text in such a way that some or all of their content constitutes requirements of this document. For dated references, only the edition cited applies. For undated references, the latest edition of the referenced document (including any amendments) applies.

NOTE 1 Where an International Publication has been modified by common modifications, indicated by (mod), the relevant EN/HD applies.

NOTE 2 Up-to-date information on the latest versions of the European Standards listed in this annex is available here: www.cenelec.eu.

Publication	Year	Title	EN/HD	Year
IEC 60079-10-1	-	Explosive atmospheres - Part 10-1: Classification of areas - Explosive gas atmospheres	EN 60079-10-1	-
IEC 60364-4-41	-	Low-voltage electrical installations - Part 4-41: Protection for safety - Protection against electric shock	HD 60364-4-41	-
IEC 60364-4-43	-	Low-voltage electrical installations - Part 4-43: Protection for safety - Protection against overcurrent	HD 60364-4-43	-
IEC 60364-6	-	Low voltage electrical installations - Part 6: Verification	HD 60364-6	-
IEC 61936-1	-	Power installations exceeding 1 kV a.c. - Part 1: Common rules	EN 61936-1	-
IEC 62485-2	2010	Safety requirements for secondary batteries and battery installations - Part 2: Stationary batteries	EN IEC 62485-2	2018
IEC 62932-1	-	Flow battery energy systems for stationary applications - Part 1: Terminology and general aspects	-	-
ISO 7010	-	Graphical symbols - Safety colours and safety signs - Registered safety signs	-	-

Documents
Document Sharing Hub
Full document details: BS EN IEC 62932-2-2:2020

CONTENTS

FOREWORD 5
INTRODUCTION 7
1 Scope 8
2 Normative references 8
3 Terms, definitions and abbreviated terms 9
3.1 Terms and definitions 9
3.2 Abbreviated terms 9
4 Procedure of the risk analysis 9
5 Safety requirements and protective measures 10
5.1 General 10
5.2 Risk information 10
5.3 Electrical hazards 10
5.3.1 Electrical shock 10
5.3.2 Short-circuits 10
5.3.3 Leakage currents 11
5.4 Hazards of gaseous emissions 11
5.4.1 General 11
5.4.2 Harmful gas 12
5.4.3 Ventilation 13
5.4.4 Warning sign 13
5.4.5 Close vicinity to emissions 14
5.5 Hazard posed by liquids 14
5.5.1 General 14
5.5.2 Detection of electrolyte leakage 14
5.5.3 Protective measures against leakage 14
5.5.4 Specific information 14
5.5.5 Flow path identification 15
5.6 Hazards of mechanical cause 15
5.7 Operational hazards and measures 15
5.7.1 General 15
5.7.2 Start 15
5.7.3 Remote monitoring and control systems 16
5.7.4 Protection 16
5.7.5 Auxiliary power failure 16
6 Instructions 16
7 Identification labels or marking 16
7.1 Name plate information 16
7.2 Warning label information and location 17
8 Transport, storage, disposal and environmental aspects 17
8.1 Packing and transport 17
8.2 Dismantling, disposal, and recycling 17
9 Inspection 17
10 Maintenance 18
11 Verification tests for protective measures 18

Documents
Document Sharing Hub

Full document details: BS EN IEC 62932-2-2:2020

11.1 General ... 18
11.1.1 Tests ... 18
11.1.2 Test object ... 19
11.1.3 Test category ... 19
11.2 Dielectric strength of the parts in contact with the fluid ... 19
11.2.1 Requirements ... 19
11.2.2 Category ... 19
11.2.3 Number of samples ... 19
11.2.4 Test and acceptance criteria ... 19
11.3 Operational sequence ... 19
11.3.1 Requirements ... 19
11.3.2 Category ... 19
11.3.3 Number of samples ... 19
11.3.4 Test ... 20
11.3.5 Acceptance criteria ... 20
11.4 Emergency stop ... 20
11.4.1 Requirement ... 20
11.4.2 Category ... 20
11.4.3 Number of samples ... 20
11.4.4 Test ... 20
11.4.5 Acceptance criteria ... 20
11.5 Protection ... 20
11.5.1 Requirements ... 20
11.5.2 Category ... 21
11.5.3 Number of samples ... 21
11.5.4 Test ... 21
11.5.5 Acceptance criteria ... 21
11.6 Safety requirement for stacks ... 21
Annex A (informative) Recommended structure of user manual ... 22
A.1 General ... 22
A.2 Table of contents ... 22
A.3 Safety warning ... 22
A.4 Introduction ... 22
A.5 Product description ... 22
A.5.1 Overview ... 22
A.5.2 Technical specifications ... 23
A.5.3 System structure ... 23
A.5.4 Applications ... 23
A.5.5 Operational sequence ... 23
A.6 Site requirements ... 23
A.6.1 Location and load ... 23
A.6.2 Access and clearance ... 23
A.6.3 Precautionary measures for fluid containment ... 23
A.6.4 Ventilation ... 24
A.6.5 Temperature ... 24
A.7 Operation ... 24
A.7.1 General ... 24
A.7.2 Checks before operation ... 24
A.7.3 Energizing and de-energizing the system ... 24

AVA Documents
Document Sharing Hub

A.7.4 Valve status 24
A.7.5 Specific operations 24
A.7.6 Notices for operation 24
A.8 Alarms and fault finding 25
A.9 Maintenance 25
A.10 Contact information 25
Annex B (normative) Safety requirements for stacks 26
B.1 General 26
B.2 External short-circuit of the stack 26
B.2.1 Requirements 26
B.2.2 Category 26
B.2.3 Number of samples 26
B.2.4 Test 26
B.2.5 Acceptance criteria 26
B.3 Heat shock strength 27
B.3.1 Requirements 27
B.3.2 Category 27
B.3.3 Number of samples 27
B.3.4 Test 27
B.3.5 Acceptance criteria 27
B.4 Leakage of the stack 27
B.4.1 Requirements 27
B.4.2 Category 28
B.4.3 Number of samples 28
B.4.4 Test 28
B.4.5 Acceptance criteria 28
Bibliography 29

Figure 1 – Flow battery energy system 7

Table 1 – List of verification tests for protective measurements 18
Table B.1 – List of verification tests for stacks for protective measurements 26

Documents
Document Sharing Hub

Full document details: BS EN IEC 62932-2-2:2020

INTERNATIONAL ELECTROTECHNICAL COMMISSION

FLOW BATTERY ENERGY SYSTEMS FOR STATIONARY APPLICATIONS –

Part 2-2: Safety requirements

FOREWORD

1) The International Electrotechnical Commission (IEC) is a worldwide organization for standardization comprising all national electrotechnical committees (IEC National Committees). The objective of IEC is to promote international co-operation on all questions concerning standardization in the electrical and electronic fields. To this end and in addition to other activities, IEC publishes International Standards, Technical Specifications, Technical Reports, Publicly Available Specifications (PAS) and Guides (hereafter referred to as "IEC Publication(s)"). Their preparation is entrusted to technical committees; any IEC National Committee interested in the subject dealt with may participate in this preparatory work. International, governmental and non-governmental organizations liaising with the IEC also participate in this preparation. IEC collaborates closely with the International Organization for Standardization (ISO) in accordance with conditions determined by agreement between the two organizations.
2) The formal decisions or agreements of IEC on technical matters express, as nearly as possible, an international consensus of opinion on the relevant subjects since each technical committee has representation from all interested IEC National Committees.
3) IEC Publications have the form of recommendations for international use and are accepted by IEC National Committees. While all reasonable efforts are made to ensure that the technical content of IEC Publications is accurate, IEC cannot be held responsible for the way in which they are used or for any misinterpretation by any end user.
4) In order to promote international uniformity, IEC National Committees undertake to apply IEC Publications transparently to the maximum extent possible in their national and regional publications. Any divergence between any IEC Publication and the corresponding national or regional publication shall be clearly indicated in the latter.
5) IEC itself does not provide any attestation of conformity. Independent certification bodies provide conformity assessment services and, in some areas, access to IEC marks of conformity. IEC is not responsible for any services carried out by independent certification bodies.
6) All users should ensure that they have the latest edition of this publication.
7) No liability shall attach to IEC or its directors, employees, servants or agents including individual experts and members of its technical committees and IEC National Committees for any personal injury, property damage or other damage of any nature whatsoever, whether direct or indirect, or for costs (including legal fees) and expenses arising out of the publication, use of, or reliance upon, this IEC Publication or any other IEC Publications.
8) Attention is drawn to the normative references cited in this publication. Use of the referenced publications is indispensable for the correct application of this edition.
9) Attention is drawn to the possibility that some of the elements of this IEC Publication may be the subject of patent rights. IEC shall not be held responsible for identifying any or all such patent rights.

International Standard IEC 62932-2-2 has been prepared by IEC technical committee 21: Secondary cells and batteries, in collaboration with IEC technical committee 105: Fuel cell technologies.

The text of this International Standard is based on the following documents:

FDIS	Report on voting
21/1029/FDIS	21/1035/RVD

Full information on the voting for the approval of this International Standard can be found in the report on voting indicated in the above table.

This document has been drafted in accordance with the ISO/IEC Directives, Part 2.

A list of all parts in the IEC 62932 series, published under the general title *Flow battery energy systems for stationary applications*, can be found on the IEC website.

Documents
Document Sharing Hub

The committee has decided that the contents of this document will remain unchanged until the stability date indicated on the IEC website under "http://webstore.iec.ch" in the data related to the specific document. At this date, the document will be

- reconfirmed
- withdrawn
- replaced by a revised edition, or
- amended.

Documents
Document Sharing Hub

Full document details: BS EN IEC 62932-2-2:2020

INTRODUCTION

A flow battery system (FBS) can be utilized in a flow battery energy system (FBES). Such an FBES can consist of:

– a flow battery system,
– a power conversion system,
– other equipment and surroundings.

The FBES is connected to the external power input/output via a point of connection (POC).

This document covers the domain of the FBES, as shown in Figure 1. Energy to the auxiliary systems such as the battery management system (BMS), the battery support system (BSS), and the power conversion system (PCS) may be supplied by one of the following:

a) direct connection to the external power source;
b) the internal power source of the FBES or FBS itself.

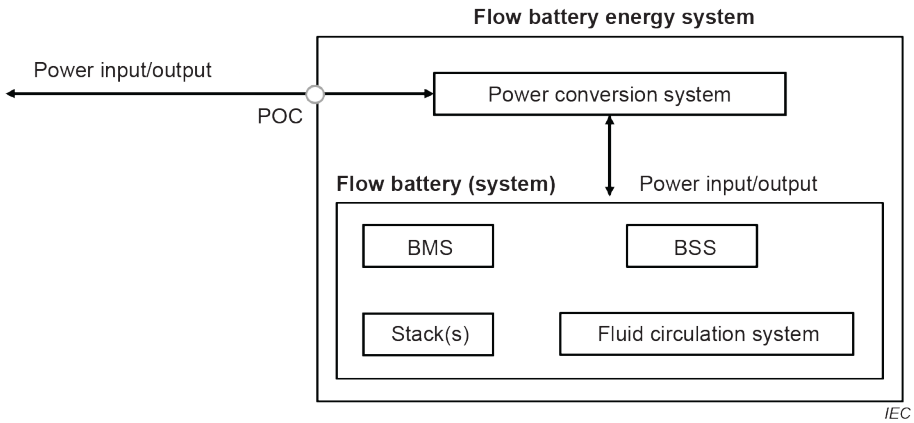

Figure 1 – Flow battery energy system

Documents
Document Sharing Hub
Full document details: BS EN IEC 62932-2-2:2020