BS EN IEC 63356-2:2024

BSI Standards Publication

LED light source characteristics

Part 2: Design parameters and values

Documents
Document Sharing Hub

Full document details: BS EN IEC 63356-2:2024

National foreword

This British Standard is the UK implementation of EN IEC 63356-2:2024. It is identical to IEC 63356-2:2024. It supersedes BS EN IEC 63356-2:2022, which is withdrawn.

The UK participation in its preparation was entrusted to Technical Committee CPL/34/1, Electric lamps.

A list of organizations represented on this committee can be obtained on request to its committee manager.

Contractual and legal considerations

This publication has been prepared in good faith, however no representation, warranty, assurance or undertaking (express or implied) is or will be made, and no responsibility or liability is or will be accepted by BSI in relation to the adequacy, accuracy, completeness or reasonableness of this publication. All and any such responsibility and liability is expressly disclaimed to the full extent permitted by the law.

This publication is provided as is, and is to be used at the recipient's own risk.

The recipient is advised to consider seeking professional guidance with respect to its use of this publication.

This publication is not intended to constitute a contract. Users are responsible for its correct application.

© The British Standards Institution 2024
Published by BSI Standards Limited 2024

ISBN 978 0 539 27489 9

ICS 29.140.99

Compliance with a British Standard cannot confer immunity from legal obligations.

This British Standard was published under the authority of the Standards Policy and Strategy Committee on 31 October 2024.

Amendments/corrigenda issued since publication

Date	Text affected

Documents
Document Sharing Hub

Full document details: BS EN IEC 63356-2:2024

EUROPEAN STANDARD

NORME EUROPÉENNE

EUROPÄISCHE NORM

EN IEC 63356-2

October 2024

ICS 29.140.99

Supersedes EN IEC 63356-2:2022

English Version

LED light source characteristics - Part 2: Design parameters and values (IEC 63356-2:2024)

Caractéristiques de source lumineuse à LED - Partie 2: Paramètres et valeurs de conception (IEC 63356-2:2024)

Eigenschaften von LED-Lichtquellen - Teil 2: Konstruktionsparameter und werte (IEC 63356-2:2024)

This European Standard was approved by CENELEC on 2024-10-18. CENELEC members are bound to comply with the CEN/CENELEC Internal Regulations which stipulate the conditions for giving this European Standard the status of a national standard without any alteration.

Up-to-date lists and bibliographical references concerning such national standards may be obtained on application to the CEN-CENELEC Management Centre or to any CENELEC member.

This European Standard exists in three official versions (English, French, German). A version in any other language made by translation under the responsibility of a CENELEC member into its own language and notified to the CEN-CENELEC Management Centre has the same status as the official versions.

CENELEC members are the national electrotechnical committees of Austria, Belgium, Bulgaria, Croatia, Cyprus, the Czech Republic, Denmark, Estonia, Finland, France, Germany, Greece, Hungary, Iceland, Ireland, Italy, Latvia, Lithuania, Luxembourg, Malta, the Netherlands, Norway, Poland, Portugal, Republic of North Macedonia, Romania, Serbia, Slovakia, Slovenia, Spain, Sweden, Switzerland, Türkiye and the United Kingdom.

European Committee for Electrotechnical Standardization
Comité Européen de Normalisation Electrotechnique
Europäisches Komitee für Elektrotechnische Normung

CEN-CENELEC Management Centre: Rue de la Science 23, B-1040 Brussels

© 2024 CENELEC All rights of exploitation in any form and by any means reserved worldwide for CENELEC Members.

Ref. No. EN IEC 63356-2:2024 E

AVA Documents Document Sharing Hub

Full document details: BS EN IEC 63356-2:2024

European foreword

The text of document 34A/2405/FDIS, future edition 2 of IEC 63356-2, prepared by SC 34A "Electric light sources" of IEC/TC 34 "Lighting" was submitted to the IEC-CENELEC parallel vote and approved by CENELEC as EN IEC 63356-2:2024.

The following dates are fixed:

- latest date by which the document has to be implemented at national level by publication of an identical national standard or by endorsement (dop) 2025-10-31
- latest date by which the national standards conflicting with the document have to be withdrawn (dow) 2027-10-31

This document supersedes EN IEC 63356-2:2022 and all of its amendments and corrigenda (if any).

Attention is drawn to the possibility that some of the elements of this document may be the subject of patent rights. CENELEC shall not be held responsible for identifying any or all such patent rights.

Any feedback and questions on this document should be directed to the users' national committee. A complete listing of these bodies can be found on the CENELEC website.

Endorsement notice

The text of the International Standard IEC 63356-2:2024 was approved by CENELEC as a European Standard without any modification.

In the official version, for Bibliography, the following note has to be added for the standard indicated:

IEC 62031:—[1] NOTE Approved as prEN IEC 62031:2024 (not modified)

IEC 63554:—[2] NOTE Approved as prEN IEC 63554:2024 (not modified)

IEC 63555:—[3] NOTE Approved as prEN IEC 63555:2024 (not modified)

[1] Third edition under preparation. Stage at the time of publication: IEC CCDV 62031:2024.

[2] First edition under preparation. Stage at the time of publication: IEC CCDV 63554:2024.

[3] First edition under preparation. Stage at the time of publication: IEC CCDV 63555:2024.

Documents
Document Sharing Hub

Full document details: BS EN IEC 63356-2:2024

CONTENTS

FOREWORD 5
1 Scope 7
2 Normative references 7
3 Terms and definitions 7
4 Overview and common information 8
4.1 General 8
4.2 Numbering system 8
5 Rectangular LED modules with undefined light emitting surface 8
5.1 General 8
5.2 Mechanical references 8
5.3 LED module categories 9
5.3.1 General 9
5.3.2 L6W6 9
5.3.3 L14W2 10
5.3.4 L28W2 11
5.3.5 L28W4 12
5.3.6 L28W6 13
5.3.7 L28W28 14
5.3.8 L38W38 16
5.3.9 L56W56 19
5.3.10 L56W2 21
5.3.11 L56W4 21
5.3.12 L112W2 22
5.3.13 L115W2 25
5.3.14 L140W2 27
5.3.15 L145W2 29
5.3.16 L30W1 31
5.3.17 L58W1 32
5.3.18 L115W1 33
5.3.19 L145W1 34
6 Circular LED modules with a circular light emitting surface for spot lighting 35
6.1 General 35
6.2 Mechanical references 35
6.3 Mechanical interface of the LED module 37
6.3.1 LED module demarcation 37
6.3.2 Optics contact area 38
6.3.3 Requirements on screw holes 40
6.3.4 LED module electrical interconnect 40
6.3.5 Luminaire exclusion limits for electrical interconnects 40
6.3.6 Inner feature 41
6.3.7 Luminaire mechanical properties 41
7 LEDni modules with a rectangular shape and a circular light emitting surface 41
7.1 General 41
7.2 Mechanical references for an LEDni module 42
7.3 Mechanical interface of the LEDni module 43
7.4 LEDni module outlines 43

AVA Documents
Document Sharing Hub

7.4.1 General 43
7.4.2 LEDni modules without mounting features 44
7.4.3 LEDni modules with mounting holes 45
7.4.4 LEDni modules with recessed corners 45
7.5 Electrical contact areas 46
7.5.1 Contact location 46
7.5.2 Minimum contact size 46
7.5.3 Contact overlap area 47
7.5.4 Maximum electrical contact area 47
7.6 PCB thickness 48
7.7 Inclusion limit zone 48
Bibliography 50

Figure 1 – Example of a luminaire with two LED modules 8
Figure 2 – Positions of the reference point and the reference plane of the LED module 9
Figure 3 – LED module demarcation of the L6W6 category 10
Figure 4 – LED module demarcation of the L14W2 category 11
Figure 5 – LED module demarcation of the L28W2 category 12
Figure 6 – LED module demarcation of the L28W4 category 13
Figure 7 – LED module demarcation of the L28W6 category 14
Figure 8 – LED module demarcation of the L28W28 category 16
Figure 9 – LED module demarcation of the L38W38 category 18
Figure 10 – LED module demarcation of the L56W56 category 20
Figure 11 – LED module demarcation of the L56W2 category 21
Figure 12 – LED module demarcation of the L56W4 category 22
Figure 13 – LED module demarcation of the L112W2 category 24
Figure 14 – LED module demarcation of the L115W2 category 26
Figure 15 – LED module demarcation of the L140W2 category 28
Figure 16 – LED module demarcation of the L145W2 category 30
Figure 17 – LED module demarcation of the L30W1 category 31
Figure 18 – LED module demarcation of the L58W1 category 32
Figure 19 – LED module demarcation of the L115W1 category 33
Figure 20 – LED module demarcation of the L145W1 category 34
Figure 21 – Positions of the reference point and reference plane of the LED module 36
Figure 22 – Positions of the reference point, plane and axis for the LED module (example for D50 category) 36
Figure 23 – Drawing of the demarcation of a D35 LED module 37
Figure 24 – Drawing of the demarcation of the D50 LED module 38
Figure 25 – Optics contact area of a D35 LED module 39
Figure 26 – Dimensions of OCAs for a D50 category 39
Figure 27 – Maximum inner feature outlines 41
Figure 28 – Positions of the reference point and the reference plane of an LEDni module 42
Figure 29 – Definition of the LEDni module border and mechanical references 43

Documents
Document Sharing Hub
Full document details: BS EN IEC 63356-2:2024

Figure 30 – Demarcation model for the outline of an LEDni module without mounting features 44
Figure 31 – Demarcation model for the outline of an LEDni module having mounting holes 45
Figure 32 – Demarcation model for the outline of an LEDni module having recessed corners 46
Figure 33 – Location of the electrical contacts for LEDni modules 46
Figure 34 – Minimum size contact area for LEDni module electrical contacts 47
Figure 35 – Overlap area for the electrical contacts of LEDni modules 47
Figure 36 – Maximum electrical contact area for LEDni modules 48
Figure 37 – Inclusion limit zone for LEDni module components 48

Table 1 – LED module demarcation of the L6W6 category 9
Table 2 – LED module demarcation of the L14W2 category 11
Table 3 – LED module demarcation of the L28W2 category 12
Table 4 – LED module demarcation of the L28W4 category 13
Table 5 – LED module demarcation of the L28W6 category 14
Table 6 – LED module demarcation of the L28W28 category 15
Table 7 – LED module demarcation of the L38W38 category 17
Table 8 – LED module demarcation of the L56W56 category 19
Table 9 – LED module demarcation of the L56W2 category 21
Table 10 – LED module demarcation of the L56W4 category 22
Table 11 – LED module demarcation of the L112W2 category 23
Table 12 – LED module demarcation of the L115W2 category 25
Table 13 – LED module demarcation of the L140W2 category 27
Table 14 – LED module demarcation of the L145W2 category 29
Table 15 – LES category specifications for circular LED modules for spot lighting 35
Table 16 – Dimensions of D35 LED module demarcation 38
Table 17 – Maximum inner OCA diameter 39
Table 18 – Minimum and maximum OCA heights 40
Table 19 – Maximum height b of inner feature 41
Table 20 – Circular LES category specifications for LEDni modules 42
Table 21 – Values of dimensions for LEDni module categories[a] 44
Table 22 – Inclusion limit zone values of dimension $\phi_{keep\text{-}in}$ by LEDni module and LES category 49

Documents
Document Sharing Hub
Full document details: BS EN IEC 63356-2:2024

INTERNATIONAL ELECTROTECHNICAL COMMISSION

LED LIGHT SOURCE CHARACTERISTICS –

Part 2: Design parameters and values

FOREWORD

1) The International Electrotechnical Commission (IEC) is a worldwide organization for standardization comprising all national electrotechnical committees (IEC National Committees). The object of IEC is to promote international co-operation on all questions concerning standardization in the electrical and electronic fields. To this end and in addition to other activities, IEC publishes International Standards, Technical Specifications, Technical Reports, Publicly Available Specifications (PAS) and Guides (hereafter referred to as "IEC Publication(s)"). Their preparation is entrusted to technical committees; any IEC National Committee interested in the subject dealt with may participate in this preparatory work. International, governmental and non-governmental organizations liaising with the IEC also participate in this preparation. IEC collaborates closely with the International Organization for Standardization (ISO) in accordance with conditions determined by agreement between the two organizations.
2) The formal decisions or agreements of IEC on technical matters express, as nearly as possible, an international consensus of opinion on the relevant subjects since each technical committee has representation from all interested IEC National Committees.
3) IEC Publications have the form of recommendations for international use and are accepted by IEC National Committees in that sense. While all reasonable efforts are made to ensure that the technical content of IEC Publications is accurate, IEC cannot be held responsible for the way in which they are used or for any misinterpretation by any end user.
4) In order to promote international uniformity, IEC National Committees undertake to apply IEC Publications transparently to the maximum extent possible in their national and regional publications. Any divergence between any IEC Publication and the corresponding national or regional publication shall be clearly indicated in the latter.
5) IEC itself does not provide any attestation of conformity. Independent certification bodies provide conformity assessment services and, in some areas, access to IEC marks of conformity. IEC is not responsible for any services carried out by independent certification bodies.
6) All users should ensure that they have the latest edition of this publication.
7) No liability shall attach to IEC or its directors, employees, servants or agents including individual experts and members of its technical committees and IEC National Committees for any personal injury, property damage or other damage of any nature whatsoever, whether direct or indirect, or for costs (including legal fees) and expenses arising out of the publication, use of, or reliance upon, this IEC Publication or any other IEC Publications.
8) Attention is drawn to the Normative references cited in this publication. Use of the referenced publications is indispensable for the correct application of this publication.
9) IEC draws attention to the possibility that the implementation of this document may involve the use of (a) patent(s). IEC takes no position concerning the evidence, validity or applicability of any claimed patent rights in respect thereof. As of the date of publication of this document, IEC had not received notice of (a) patent(s), which may be required to implement this document. However, implementers are cautioned that this may not represent the latest information, which may be obtained from the patent database available at https://patents.iec.ch. IEC shall not be held responsible for identifying any or all such patent rights.

IEC 63356-2 has been prepared by subcommittee 34A: Electric light sources, of IEC technical committee 34: Lighting. It is an International Standard.

This second edition cancels and replaces the first edition published in 2022. This edition constitutes a technical revision.

This edition includes the following significant technical changes with respect to the previous edition:

a) a new Clause 6 for circular LED modules with a circular light emitting surface for spot lighting has been added;
b) a new Clause 7 for LEDni modules with a rectangular shape and a circular light emitting surface has been added.

Documents
Document Sharing Hub

The text of this International Standard is based on the following documents:

Draft	Report on voting
34A/2405/FDIS	34A/2412/RVD

Full information on the voting for its approval can be found in the report on voting indicated in the above table.

The language used for the development of this International Standard is English.

This document was drafted in accordance with ISO/IEC Directives, Part 2, and developed in accordance with ISO/IEC Directives, Part 1 and ISO/IEC Directives, IEC Supplement, available at www.iec.ch/members_experts/refdocs. The main document types developed by IEC are described in greater detail at www.iec.ch/publications.

A list of all parts in the IEC 63356 series, published under the general title *LED light source characteristics*, can be found on the IEC website.

The committee has decided that the contents of this document will remain unchanged until the stability date indicated on the IEC website under webstore.iec.ch in the data related to the specific document. At this date, the document will be

- reconfirmed,
- withdrawn, or
- revised.

IMPORTANT – The "colour inside" logo on the cover page of this document indicates that it contains colours which are considered to be useful for the correct understanding of its contents. Users should therefore print this document using a colour printer.

Documents
Document Sharing Hub

Full document details: BS EN IEC 63356-2:2024

LED LIGHT SOURCE CHARACTERISTICS –

Part 2: Design parameters and values

1 Scope

This part of IEC 63356 specifies design parameters and design values of an LED light source or related interface characteristics.

NOTE 1 Interface characteristics can cover interfaces between the LED light source and the luminaire or the controlgear, or the LED light source and additional attachments.

NOTE 2 Interfaces can be related to for example electrical, mechanical, or optical aspects.

This document does not cover interchangeability between products from different LED light source manufacturers.

NOTE 3 Interchangeability is covered by IEC 63356-1.

Lamp caps and lampholders specified in the IEC 60061 series are not within the scope of this document.

Compliance criteria relating to parameters in this document are covered by:

- IEC 62031:—[1], LED modules – Safety requirements, or;
- IEC 63554:—[2], LED lamps – Safety requirements, or;
- IEC 63555:—[3], LED light sources – Performance requirements.

2 Normative references

There are no normative references in this document.

3 Terms and definitions

For the purposes of this document, the following terms and definitions apply.

ISO and IEC maintain terminology databases for use in standardization at the following addresses:

- IEC Electropedia: available at https://www.electropedia.org/
- ISO Online browsing platform: available at https://www.iso.org/obp

3.1
thermal interface material
TIM
material with specified thermal conductivity assembled between an LED module and a luminaire to enable improved heat dissipation

---

[1] Third edition under preparation. Stage at the time of publication IEC CCDV 62031:2024.

[2] First edition under preparation. Stage at the time of publication IEC CCDV 63554:2024.

[3] First edition under preparation. Stage at the time of publication IEC CCDV 63555:2024.

Documents
Document Sharing Hub

Full document details: BS EN IEC 63356-2:2024

4 Overview and common information

4.1 General

Dimensions are specified at a temperature of (25 ± 5) °C, unless otherwise specified.

All values of dimensions that omit an explicit unit indication are in millimetres.

4.2 Numbering system

Products that have comparable interfaces are grouped in separate clauses.

5 Rectangular LED modules with undefined light emitting surface

NOTE Clause 5, including LED module demarcations specified in 5.3.2 through 5.3.19, is taken from Zhaga Book 7 Edition 1.7.

5.1 General

Rectangular LED modules with undefined light emitting surface (LES) are intended to be mounted in a luminaire. Figure 1 illustrates an example of an LED module-luminaire combination. In this example the luminaire holds two LED modules. In practice, a luminaire can hold any number of LED modules.

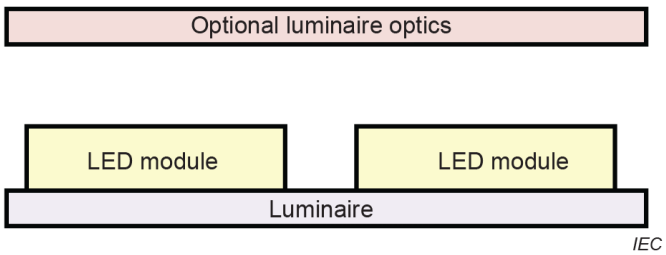

Figure 1 – Example of a luminaire with two LED modules

The luminaire typically features luminaire-optics which shape the light output of the LED module(s).

5.2 Mechanical references

The reference plane and the reference point of an LED module, including (optional) TIM are defined in Figure 2. Dimensions are specified relative to either the reference point or the reference plane unless indicated otherwise. Moreover, dimensions are specified to include the thickness of the TIM (if present).

Documents
Document Sharing Hub
Full document details: BS EN IEC 63356-2:2024

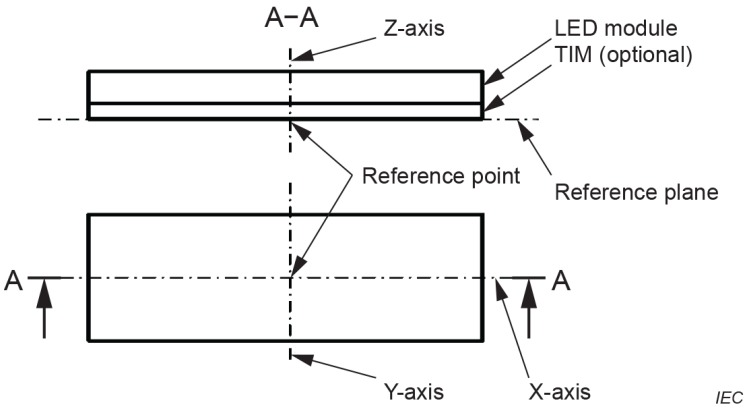

Figure 2 – Positions of the reference point and the reference plane of the LED module

5.3 LED module categories

5.3.1 General

Subclause 5.3 specifies a number of LED module categories that are identified by a designation. The LED module demarcations of these LED module categories are specified in 5.3.2 to 5.3.19.

The intention of the demarcation model is to visualize restricted areas or volumes that no part of a luminaire should cross. The hashed area indicates limits for the inclusion zone for LED module design and the exclusion zone for luminaire design.

Unless stated otherwise, all holes are available and for each hole at least 25 % of the circumference of the hole is present in the LED module. The demarcation model specifies the minimum diameter of the mounting holes at a specified position.

NOTE In typical designs the diameter of these holes can be larger allowing for a tolerance on the position of the holes.

If the LED module is applied in combination with a TIM, this material is defined to be part of the LED module. Thus, the total height of the module and TIM should not exceed the maximum height H (see 5.3.2 to 5.3.19).

5.3.2 L6W6

The designation for this category is 'L6W6'.

The LED module demarcation of the L6W6 category is defined in Table 1 and Figure 3.

Table 1 – LED module demarcation of the L6W6 category

Dimension	Value
L	60
W	60
H	20
a	48
b	48
M	20
P	35
Øc	4,3

Documents
Document Sharing Hub
Full document details: BS EN IEC 63356-2:2024

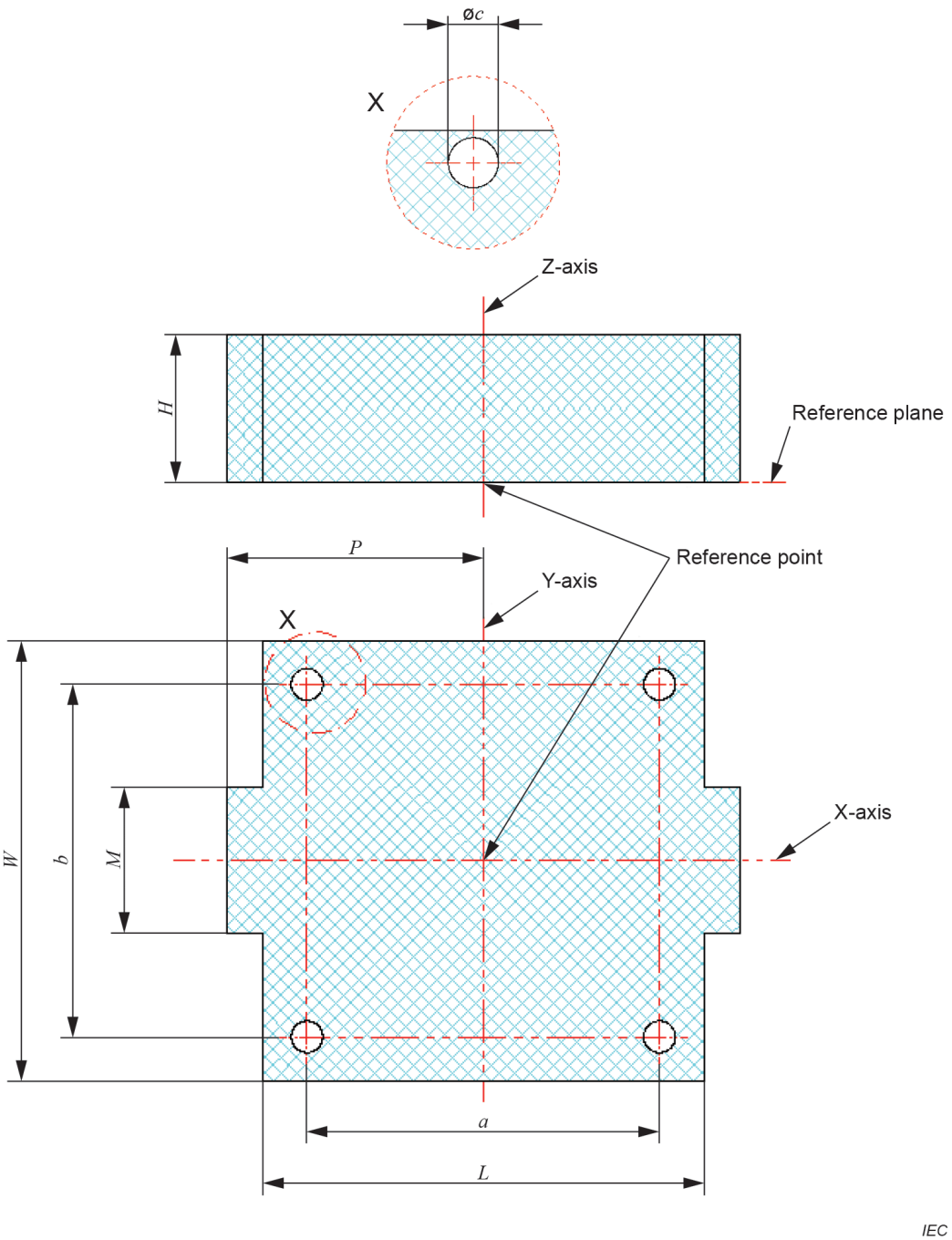

NOTE The top drawing shows the detail X.

Figure 3 – LED module demarcation of the L6W6 category

The X-axis and Y-axis are the symmetry axes for the outline and the mounting holes.

5.3.3 L14W2

The designation for this category is 'L14W2'.

The LED module demarcation of the L14W2 category is defined in Table 2 and Figure 4.

Documents
Document Sharing Hub
Full document details: BS EN IEC 63356-2:2024

Table 2 – LED module demarcation of the L14W2 category

Dimension	Value
L	140
W	24
H	20
a	110
b	18,4
d	15
Ø*c*	4,3

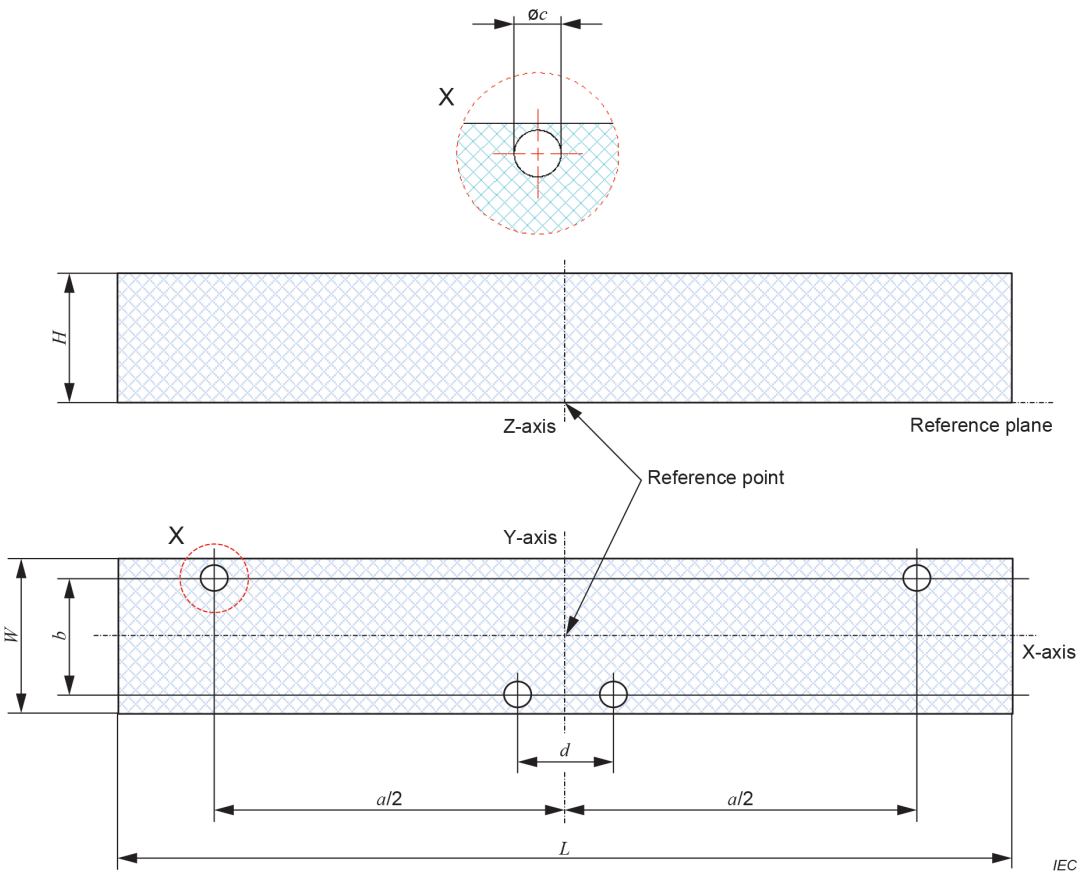

NOTE The top drawing shows the detail X.

Figure 4 – LED module demarcation of the L14W2 category

The X-axis and Y-axis are the symmetry axes for the outline and the crosshair lines of the mounting holes.

5.3.4 L28W2

The designation for this category is 'L28W2'.

The LED module demarcation of the L28W2 category is defined in Table 3 and Figure 5. The two mounting holes at the bottom of the diagram of Figure 5 are optional.

Documents
Document Sharing Hub
Full document details: BS EN IEC 63356-2:2024

Table 3 – LED module demarcation of the L28W2 category

Dimension	Value
L	280
W	24
H	20
a	125
b	18,4
Ø*c*	4,3

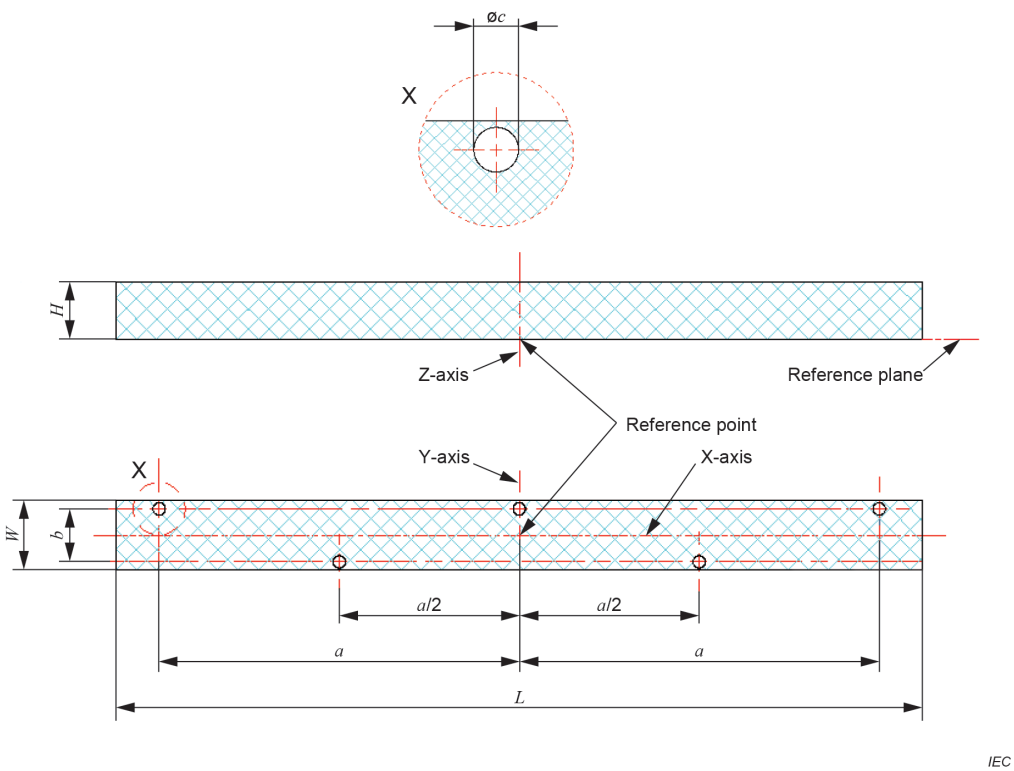

NOTE The top drawing shows the detail X.

Figure 5 – LED module demarcation of the L28W2 category

The X-axis is the symmetry axis for the outline and the crosshair lines of the mounting holes.

The Y-axis is the symmetry axis for the outline and mounting holes.

5.3.5 L28W4

The designation for this category is 'L28W4'.

The LED module demarcation of the L28W4 category is defined in Table 4 and Figure 6.

Documents
Document Sharing Hub
Full document details: BS EN IEC 63356-2:2024

Table 4 – LED module demarcation of the L28W4 category

Dimension	Value
L	281
W	41
H	20
a	110
b	31
Ø*c*	4,3

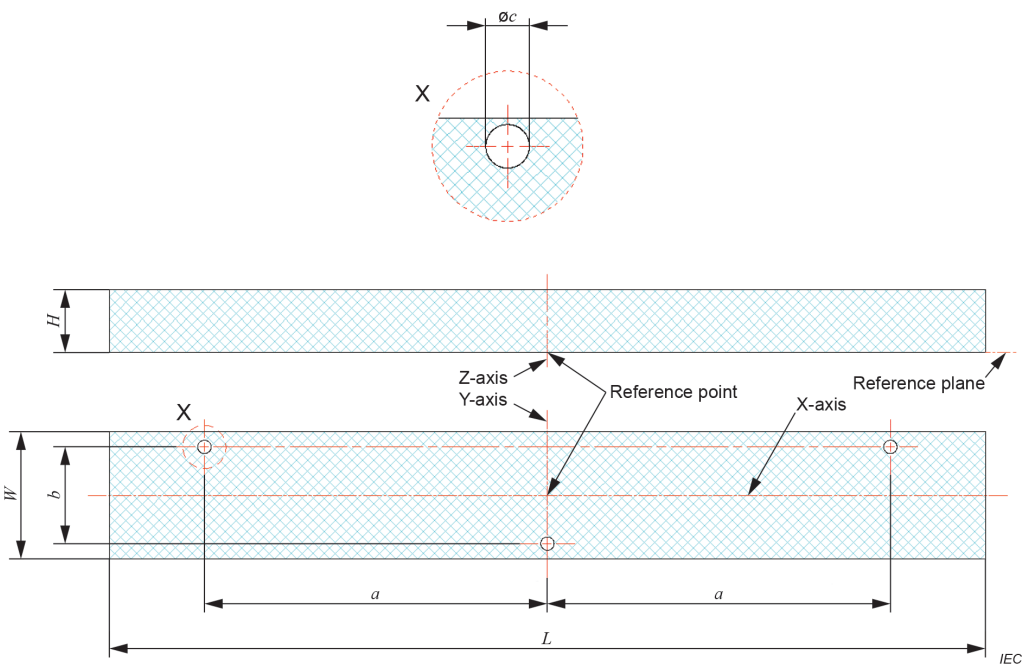

NOTE The top drawing shows the detail X.

Figure 6 – LED module demarcation of the L28W4 category

The X-axis is the symmetry axis for the outline and the crosshair lines of the mounting holes.

The Y-axis is the symmetry axis for the outline and mounting holes.

5.3.6 L28W6

The designation for this category is 'L28W6'.

The LED module demarcation of the L28W6 category is defined in Table 5 and Figure 7.

Documents
Document Sharing Hub
Full document details: BS EN IEC 63356-2:2024

Table 5 – LED module demarcation of the L28W6 category

Dimension	Value
L	281
W	61
H	20
a	91
b	40
Ø*c*	4,3
d	11
e	15

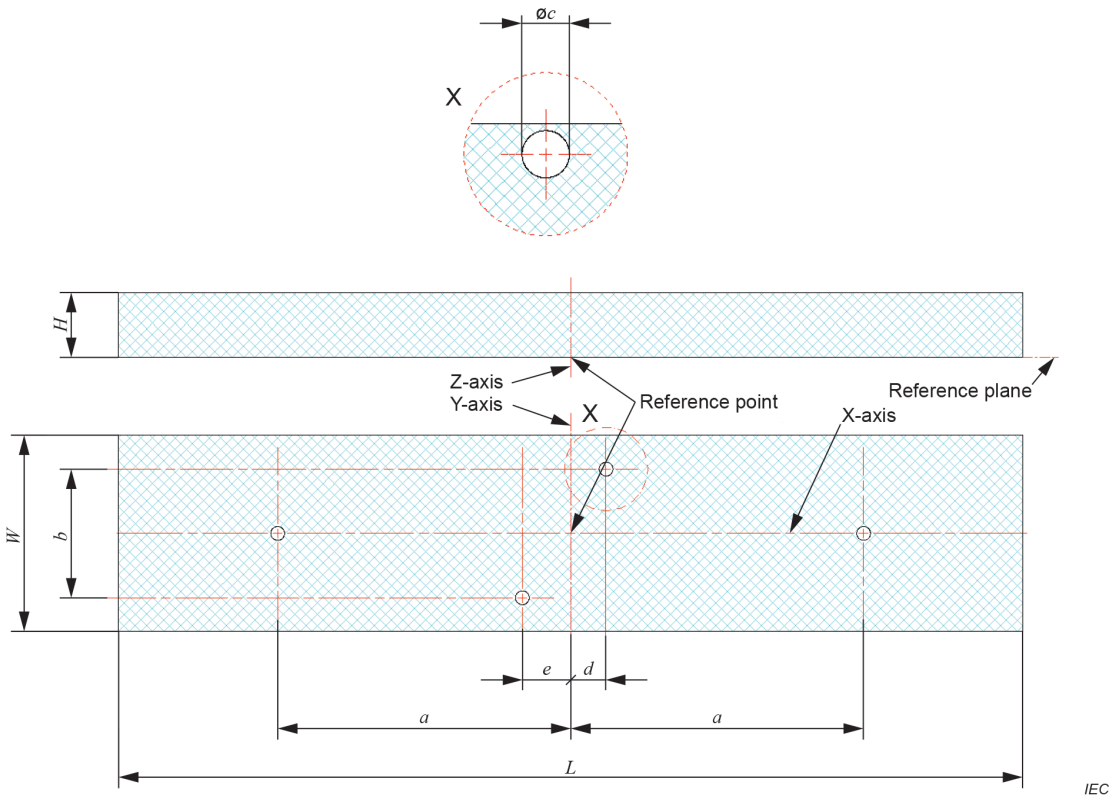

NOTE The top drawing shows the detail X.

Figure 7 – LED module demarcation of the L28W6 category

The X-axis is the symmetry axis for the outline and the crosshair lines of the mounting holes.

The Y-axis is the symmetry axis for the outline and the leftmost and rightmost mounting holes.

5.3.7 L28W28

The designation for this category is 'L28W28'.

The LED module demarcation of the L28W28 category is defined in Table 6 and Figure 8.

Documents
Document Sharing Hub
Full document details: BS EN IEC 63356-2:2024