BS EN ISO 10297:2014+A1:2017
Incorporating corrigendum November 2014

BSI Standards Publication

Gas cylinders — Cylinder valves — Specification and type testing

Documents
Document Sharing Hub

Full document details: BS EN ISO 10297:2014+A1:2017

National foreword

This British Standard is the UK implementation of EN ISO 10297:2014+A1:2017. It is identical to ISO 10297:2014, incorporating amendment 1:2017. It supersedes BS EN ISO 10297:2014 , which is withdrawn.

The start and finish of text introduced or altered by amendment is indicated in the text by tags. Tags indicating changes to ISO (delete as appropriate) text carry the number of the ISO/IEC amendment. For example, text altered by ISO amendment 1 is indicated by ▌A1〉 〈A1▌.

The UK participation in its preparation was entrusted to Technical Committee PVE/3/1, Gas containers - Valve fittings for gas containers.

A list of organizations represented on this committee can be obtained on request to its secretary.

This publication does not purport to include all the necessary provisions of a contract. Users are responsible for its correct application.

© The British Standards Institution 2017
Published by BSI Standards Limited 2017

ISBN 978 0 580 92017 2

ICS 23.060.40; 23.020.35

Compliance with a British Standard cannot confer immunity from legal obligations.

This British Standard was published under the authority of the Standards Policy and Strategy Committee on 30 September 2014.

Amendments/corrigenda issued since publication

Date	Text affected
30 November 2014	CEN Correction Notice 29 November 2014 implements ISO corrected text 1 November 2014: titles added to Figures 5 and 6
30 November 2017	Implementation of ISO/IEC amendment 1:2017 with CEN endorsement A1:2017

Documents
Document Sharing Hub

Full document details: BS EN ISO 10297:2014+A1:2017

EUROPEAN STANDARD

NORME EUROPÉENNE

EUROPÄISCHE NORM

EN ISO 10297:2014 +A1

July 2014

ICS 23.060.40; 23.020.30

English Version

Gas cylinders — Cylinder valves — Specification and type testing (ISO 10297:2014)

Bouteilles à gaz — Robinets de bouteilles — Spécifications et essais de type (ISO 10297:2014)

Gasflaschen — Flaschenventile — Spezifikation und Baumusterprüfungen (ISO 10297:2014)

This European Standard was approved by CEN on 28 June 2014.

CEN members are bound to comply with the CEN/CENELEC Internal Regulations which stipulate the conditions for giving this European Standard the status of a national standard without any alteration. Up-to-date lists and bibliographical references concerning such national standards may be obtained on application to the CEN-CENELEC Management Centre or to any CEN member.

This European Standard exists in three official versions (English, French, German). A version in any other language made by translation under the responsibility of a CEN member into its own language and notified to the CEN-CENELEC Management Centre has the same status as the official versions.

CEN members are the national standards bodies of Austria, Belgium, Bulgaria, Croatia, Cyprus, Czech Republic, Denmark, Estonia, Finland, Former Yugoslav Republic of Macedonia, France, Germany, Greece, Hungary, Iceland, Ireland, Italy, Latvia, Lithuania, Luxembourg, Malta, Netherlands, Norway, Poland, Portugal, Romania, Slovakia, Slovenia, Spain, Sweden, Switzerland, Turkey and United Kingdom

EUROPEAN COMMITTEE FOR STANDARDIZATION
COMITÉ EUROPÉEN DE NORMALISATION
EUROPÄISCHES KOMITEE FÜR NORMUNG

CEN-CENELEC Management Centre: Avenue Marnix 17, B-1000 Brussels

© 2014 CEN All rights of exploitation in any form and by any means reserved worldwide for CEN national Members

Ref. No. EN ISO 10297:2014+A1:2017: E

Documents
Document Sharing Hub

Full document details: BS EN ISO 10297:2014+A1:2017

European foreword

This document (EN ISO 10297:2014) has been prepared by Technical Committee ISO/TC 58 "Gas cylinders" in collaboration with Technical Committee CEN/TC 23 "Transportable gas cylinders" the secretariat of which is held by BSI.

This European Standard shall be given the status of a national standard, either by publication of an identical text or by endorsement, at the latest by January 2015, and conflicting national standards shall be withdrawn at the latest by January 2015.

Attention is drawn to the possibility that some of the elements of this document may be the subject of patent rights. CEN [and/or CENELEC] shall not be held responsible for identifying any or all such patent rights.

This document supersedes EN ISO 10297:2006.

According to the CEN-CENELEC Internal Regulations, the national standards organizations of the following countries are bound to implement this European Standard: Austria, Belgium, Bulgaria, Croatia, Cyprus, Czech Republic, Denmark, Estonia, Finland, Former Yugoslav Republic of Macedonia, France, Germany, Greece, Hungary, Iceland, Ireland, Italy, Latvia, Lithuania, Luxembourg, Malta, Netherlands, Norway, Poland, Portugal, Romania, Slovakia, Slovenia, Spain, Sweden, Switzerland, Turkey and the United Kingdom.

Endorsement notice

The text of ISO 10297:2014 has been approved by CEN as EN ISO 10297:2014 without any modification.

Documents
Document Sharing Hub
Full document details: BS EN ISO 10297:2014+A1:2017

Foreword to amendment A1

This document (EN ISO 10297:2014/A1:2017) has been prepared by Technical Committee ISO/TC 58 "Gas cylinders" in collaboration with Technical Committee CEN/TC 23 “Transportable gas cylinders” the secretariat of which is held by BSI.

This Amendment to the European Standard EN ISO 10297:2014 shall be given the status of a national standard, either by publication of an identical text or by endorsement, at the latest by October 2017, and conflicting national standards shall be withdrawn at the latest by October 2017.

Attention is drawn to the possibility that some of the elements of this document may be the subject of patent rights. CEN [and/or CENELEC] shall not be held responsible for identifying any or all such patent rights.

This document has been prepared under a mandate given to CEN by the European Commission and the European Free Trade Association.

According to the CEN-CENELEC Internal Regulations, the national standards organizations of the following countries are bound to implement this European Standard: Austria, Belgium, Bulgaria, Croatia, Cyprus, Czech Republic, Denmark, Estonia, Finland, Former Yugoslav Republic of Macedonia, France, Germany, Greece, Hungary, Iceland, Ireland, Italy, Latvia, Lithuania, Luxembourg, Malta, Netherlands, Norway, Poland, Portugal, Romania, Serbia, Slovakia, Slovenia, Spain, Sweden, Switzerland, Turkey and the United Kingdom.

Endorsement notice

The text of ISO 10297:2014/Amd 1:2017 has been approved by CEN as EN ISO 10297:2014/A1:2017 without any modification.

Documents
Document Sharing Hub

Full document details: BS EN ISO 10297:2014+A1:2017

Contents

Page

Foreword to amendment A1 ... **3**
Foreword ... **vi**
Introduction ... **ix**
1 Scope ... **1**
2 Normative references ... **1**
3 Terms, definitions and symbols ... **2**
4 Valve description ... **6**
5 Valve design requirements ... **10**
5.1 General ... 10
5.2 Materials ... 11
5.3 Dimensions ... 11
5.4 Valve connections ... 12
5.5 Mechanical strength ... 13
5.5.1 Resistance to hydraulic burst pressure ... 13
5.5.2 Resistance to mechanical impact ... 13
5.6 Valve operating mechanism ... 13
5.7 Valve operating device ... 16
5.8 Leakage ... 16
5.9 Resistance to ignition ... 17
6 Type testing ... **17**
6.1 General ... 17
6.2 Documentation ... 19
6.3 Test samples ... 19
6.4 Test report ... 19
6.5 Test temperatures ... 20
6.6 Test pressures ... 20
6.6.1 Valve burst test pressure ... 20
6.6.2 Valve test pressure ... 20
6.7 Test gases ... 20
6.7.1 Gas quality ... 20
6.7.2 Leak tightness tests ... 21
6.7.3 Endurance test ... 21
6.7.4 Oxygen pressure surge test ... 21
6.8 Test schedule ... 21
A1 6.9 Hydraulic burst pressure test ... 23
6.10 Flame impingement test ... 23
6.11 Excessive torque tests ... 23
6.11.1 General ... 23
6.11.2 Handwheel operated valves ... 24
6.11.3 Key/toggle operated valves ... 24
6.12 Leak tightness tests ... 24
6.12.1 General ... 24
6.12.2 Internal leak tightness test ... 24
6.12.3 External leak tightness test ... 26
6.13 Endurance test ... 26
6.14 Visual examination ... 27
7 Marking ... **27**
Annex A (normative) **Impact test** ... **28**
Annex B (normative) **Tests for acetylene valves** ... **30**
Annex C (normative) **Oxygen pressure surge test** ... **31**

© ISO 2014 – All rights reserved
AVA Documents Document Sharing Hub
Full document details: BS EN ISO 10297:2014+A1:2017

Annex D (informative) **Example of test schedule** **35**
Annex E (informative) **Example of a vacuum test** **36**
Annex F (normative) **Endurance test machine** **37**
Bibliography **39**

© ISO 2014 – All rights reserved

Documents
Document Sharing Hub
Full document details: BS EN ISO 10297:2014+A1:2017

Foreword

ISO (the International Organization for Standardization) is a worldwide federation of national standards bodies (ISO member bodies). The work of preparing International Standards is normally carried out through ISO technical committees. Each member body interested in a subject for which a technical committee has been established has the right to be represented on that committee. International organizations, governmental and non-governmental, in liaison with ISO, also take part in the work. ISO collaborates closely with the International Electrotechnical Commission (IEC) on all matters of electrotechnical standardization.

The procedures used to develop this document and those intended for its further maintenance are described in the ISO/IEC Directives, Part 1. In particular the different approval criteria needed for the different types of ISO documents should be noted. This document was drafted in accordance with the editorial rules of the ISO/IEC Directives, Part 2. www.iso.org/directives

Attention is drawn to the possibility that some of the elements of this document may be the subject of patent rights. ISO shall not be held responsible for identifying any or all such patent rights. Details of any patent rights identified during the development of the document will be in the Introduction and/or on the ISO list of patent declarations received. www.iso.org/patents

Any trade name used in this document is information given for the convenience of users and does not constitute an endorsement.

For an explanation on the meaning of ISO specific terms and expressions related to conformity assessment, as well as information about ISO's adherence to the WTO principles in the Technical Barriers to Trade (TBT), see the following URL: Foreword - Supplementary information

The committee responsible for this document is ISO/TC 58, *Gas cylinders*, Subcommittee SC 2, *Cylinder fittings*.

This third edition cancels and replaces the second edition (ISO 10297:2006), which has been technically revised.

The main technical modifications are:

a) Scope: inclusion of main valves and valves with integrated pressure regulator (VIPR), exclusion of quick-release valves, non-return valves and ball valves;

b) Terms, definitions and symbols: introduction of new definitions and adaptation of existing definitions;

c) Valve description: new clause with figures and general description;

d) Valve design requirements:

   1) General: inclusion of additional requirement of internal leak tightness at −40 °C during transport and storage;

   2) Materials: deletion of requirements already given in ISO 11114-1 and ISO 11114-2 ; deletion of ageing sensitivity test for non-metallic materials; addition of requirement on ductility of valve body material; addition of requirement on suitability of lubricants for valve test pressure;

   3) Dimensions: deletion of requirement on bore of the valve with regard to flow requirement and adaption of requirements for valves fitted with a valve protection cap according to ISO 11117 ;

   4) Valve connections: addition of requirements for separate valve filling connection;

   5) Resistance to mechanical impact: addition of requirement for impact testing valves protected by a valve guard but fixed only to the valve, modification of acceptance criteria;

© ISO 2014 – All rights reserved
Documents
Document Sharing Hub
Full document details: BS EN ISO 10297:2014+A1:2017

6) Valve operating mechanism: inclusion of allowance to increase the endurance torque for some valve designs and to adjust compressed packed valves during endurance testing; replacement of acetylene flashback test by alternative tests without using acetylene and addition of acetylene decomposition test for main valves; modification of acceptance criteria;

7) Valve operating device: addition of requirement on the handwheel diameter required to achieve the minimum closing torque; modification of acceptance criteria for flame impingement test;

8) Resistance to ignition: addition of requirement of oxygen pressure surge testing for certain cylinder valves for gas mixtures containing oxygen and other oxidizing gases and of detailed information on acceptance criteria; addition of mandatory reference to oxygen pressure surge test for VIPR specified in ISO 22435 or ISO 10524-3 and for cylinder valves with residual pressure devices specified in ISO 15996 ;

e) Production requirements: deletion of all respective requirements but reference to ISO 14246 in scope;

f) Type testing:

1) General: addition of requirements for repeating tests depending on applied changes for a valve design;

2) Documentation: addition of detailed information on documentation required;

3) Test samples: addition of requirement to have pressure gauges/indicators fitted;

4) Test report: addition of detailed information required;

5) Test pressures: adaption of information on burst test pressure (former hydraulic test pressure);

6) Test gas: addition of requirement for using helium or hydrogen or an inert mixture of these gases for the leak tightness tests for cylinder valves for helium and hydrogen and their mixtures; extension of requirements on gas quality;

7) Test schedule: deletion of ageing as preconditioning and leak tightness test before ageing; addition of internal leak tightness test at −40 °C after endurance test; adaption of oxygen pressure surge test for cylinder valves with lubricants not rated for valve test pressure; listing of impact test;

8) Hydraulic burst pressure test: addition of testing the valve in closed position;

9) Excessive torque tests: addition of requirement to carry out the test with the valve operating device in place; differentiation between handwheel and key/toggle operated valves; extension of tests with requirement of two additional test samples;

10) Leak tightness tests: reference to informative Annex E for an example of a vacuum test; unification of the lower test pressure of 0,5 bar for all gases; implementation of internal leak tightness test at −40 °C; addition of information on required position of the valve operating mechanism for external leak tightness test; adaption of requirement for test order for all required test pressures; adaption of requirement for changing and maintaining the different test temperatures; adaption of requirement for minimum closing torque;

11) Endurance test: addition of requirement to carry out the test with the handwheel in place and of description of procedure for increasing the endurance torque for some valve designs;

12) Visual examination: addition of separate sub-clause for visual examination with detailed information on acceptance criteria;

13) Oxygen pressure surge test: information on test installation and test procedure transferred to normative Annex C; addition of detailed information on determination of pressure rise time; addition of divergent installation requirements for testing main valves; addition of detailed information on acceptance criteria;

Documents
Document Sharing Hub

© ISO 2014 – All rights reserved

Full document details: BS EN ISO 10297:2014+A1:2017

14) Acetylene test: information transferred to normative Annex B;

15) Impact test: addition of information on the valving torque according to ISO 13341 to be used; addition of subsequent hydraulic burst pressure test and internal leak tightness test; modification of test procedure;

16) Marking: addition of requirement for marking cylinder valves oxygen pressure surge tested via different connections and of detailed information on marking of valve inlet, valve outlet and separate valve filling connections;

17) Example of test sequence: information transferred from informative Annex B to informative Annex D and adaptation according to new requirements for valve designs and changes and material specifications within a valve design;

18) Addition of informative Annex E, giving an example of a vacuum test;

19) Endurance test equipment and procedure: information transferred from normative Annex C to normative Annex F.

g) full editorial rework.

This corrected version of ISO 10297:2014 incorporates the addition of titles to Figures 5 and 6.

© ISO 2014 – All rights reserved
Documents
Document Sharing Hub
Full document details: BS EN ISO 10297:2014+A1:2017

Introduction

This International Standard covers the function of a cylinder valve as a closure (defined by the UN Model Regulations). Additional features of cylinder valves (e.g. pressure regulators, residual pressure devices, non-return devices and pressure relief devices) might be covered by other standards and/or regulations.

Cylinder valves complying with this International Standard can be expected to perform satisfactorily under normal service conditions.

This International Standard pays particular attention to:

a) suitability of materials;

b) safety (mechanical strength, impact strength, endurance, leak tightness, resistance to ignition, resistance to acetylene flashback);

c) testing;

d) marking.

This standard has been written to be in conformity with the UN Model Regulations. When published it will be submitted to the UN Sub Committee of Experts on the Transport of Dangerous Goods with a request that it be included in the UN Model Regulations.

Where there is any conflict between this International Standard and any applicable regulation, the regulation always takes precedence.

Considering the changes described in the Foreword, when a cylinder valve has been approved according to the previous version of this International Standard the body responsible for approving the same cylinder valve to this new edition should consider which tests need to be performed.

In this International Standard the unit bar is used, due to its universal use in the field of technical gases. It should, however, be noted that bar is not an SI unit, and that the corresponding SI unit for pressure is Pa (1 bar = 10^5 Pa = 10^5 N/m^2).

Pressure values given in this International Standard are given as gauge pressure (pressure exceeding atmospheric pressure) unless noted otherwise.

© ISO 2014 – All rights reserved

Documents
Document Sharing Hub
Full document details: BS EN ISO 10297:2014+A1:2017

This page deliberately left blank

Documents
Document Sharing Hub

Full document details: BS EN ISO 10297:2014+A1:2017

INTERNATIONAL STANDARD **ISO 10297+A1:2017:2014(E)**

Gas cylinders — Cylinder valves — Specification and type testing

1 Scope

This International Standard specifies design, type testing and marking requirements for:

a) cylinder valves intended to be fitted to refillable transportable gas cylinders;

b) main valves (excluding ball valves) for cylinder bundles;

c) cylinder valves or main valves with integrated pressure regulator (VIPR);

A1 d) valves for pressure drums and tubes; A1

which convey compressed, liquefied or dissolved gases.

A1 NOTE 1 Where there is no risk of ambiguity, cylinder valves, main valves, VIPR and valves for pressure drums and tubes are addressed with the collective term "valves" within this document. A1

This International Standard covers the function of a valve as a closure.

This International Standard does not apply to

— valves for cryogenic equipment, portable fire extinguishers and liquefied petroleum gas (LPG), and

A1 — quick-release cylinder valves (e.g. for fire-extinguishing, explosion protection and rescue applications), self-closing cylinder valves or ball valves. A1

A1 NOTE 2 Requirements for valves for cryogenic vessels are specified in ISO 21011 and at a regional level, e.g. in EN 1626. Requirements for LPG valves are specified in ISO 14245 or ISO 15995. Requirements for quick-release cylinder valves are specified in ISO 17871. Requirements for self-closing cylinder valves are specified. in ISO 17879. Requirements for valves for portable fire extinguishers at a regional level are specified e.g. in EN 3 series. A1

NOTE 3 Requirements for manufacturing tests and examinations of valves covered by this International Standard are given in ISO 14246 .

NOTE 4 Additional requirements for VIPR are specified in ISO 22435 for industrial applications or ISO 10524-3 for medical applications. Additional requirements for residual pressure valves with or without a non-return function are specified in ISO 15996 . Additional requirements for pressure-relief devices might be specified in international/regional regulations/standards.

NOTE 5 Additional specific requirements for valves for breathing apparatus at a regional level are specified e.g. in EN 144 series. Additional specific requirements for quick-release valves for fixed fire-fighting systems are specified in ISO 16003 and at a regional level e.g. in EN 12094-4 .

2 Normative references

The following referenced documents, in whole or in part, are normatively referenced in this document and are indispensable for its application. For dated references, only the edition cited applies. For undated references, the latest edition of the referenced document (including any amendments) applies.

ISO 148-1 , *Metallic materials — Charpy pendulum impact test — Part 1: Test method*

ISO 407 , *Small medical gas cylinders — Pin-index yoke-type valve connections*

ISO 10286 , *Gas cylinders — Terminology*

© ISO 2014 – All rights reserved

Documents
Document Sharing Hub
Full document details: BS EN ISO 10297:2014+A1:2017

ISO 10524-3 , *Pressure regulators for use with medical gases — Part 3: Pressure regulators integrated with cylinder valves*

ISO 11114-1 , *Gas cylinders — Compatibility of cylinder and valve materials with gas contents — Part 1: Metallic materials*

ISO 11114-2 , *Gas cylinders — Compatibility of cylinder and valve materials with gas contents — Part 2: Non-metallic materials*

ISO 11117:2008 , *Gas cylinders — Valve protection caps and valve guards — Design, construction and tests*

ISO 13341 , *Gas cylinders — Fitting of valves to gas cylinders*

ISO 15615:2013 , *Gas welding equipment — Acetylene manifold systems for welding, cutting and allied processes — Safety requirements in high-pressure devices*

ISO 15996 , *Gas cylinders — Residual pressure valves — General requirements and type testing*

ISO 22435 , *Gas cylinders — Cylinder valves with integrated pressure regulators — Specification and type testing*

3 Terms, definitions and symbols

For the purposes of this document, the terms and definitions given in ISO 10286 , and the following apply.

3.1
valve operating mechanism
mechanism which closes and opens the valve orifice and which includes the internal and external sealing systems

Note 1 to entry: In ISO 22435 the valve operating mechanism is called shut-off mechanism.

Note 2 to entry: For some VIPR designs the pressure regulating valve can act as the shut-off mechanism.

EXAMPLE A threaded valve spindle which, when rotated, raises and lowers a seal/seat.

3.2
valve design
classification of valves with regard to the *valve operating mechanism* (3.1)

3.3
valve operating device
component which actuates the *valve operating mechanism* (3.1)

EXAMPLE Handwheel, key, knob, toggle, lever or actuator.

3.4
external leak tightness
leak tightness to atmosphere (leakage in and/or leakage out) when the valve is open

Note 1 to entry: See Figure 1.

© ISO 2014 – All rights reserved
Documents
Document Sharing Hub
Full document details: BS EN ISO 10297:2014+A1:2017

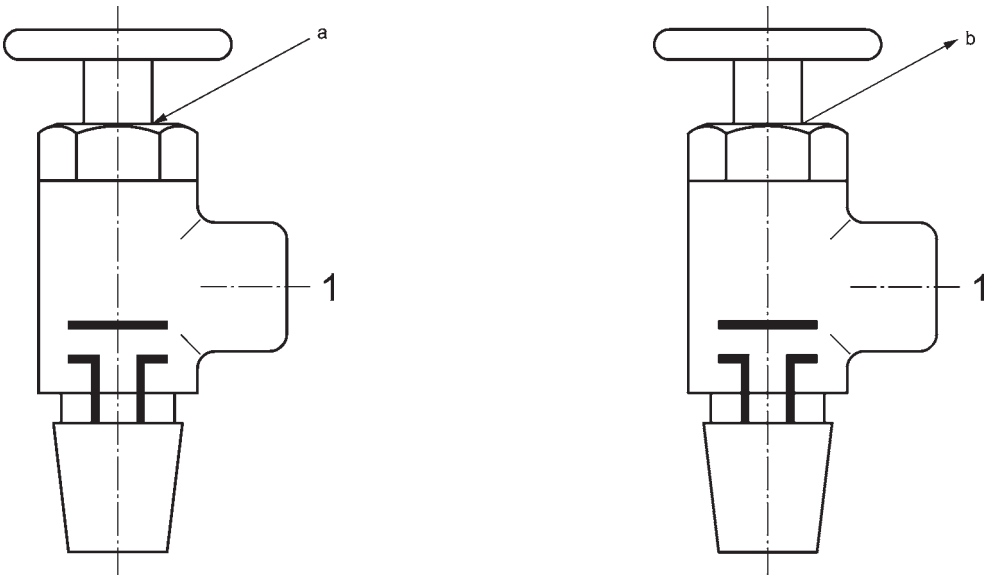

$p < p_a$ $p > p_a$

Key

1 valve outlet connection (sealed)

a Leakage in (vacuum test)

b Leakage out

p internal pressure

p_a atmospheric pressure

Figure 1 — External leak tightness

3.5
internal leak tightness
leak tightness across the valve seat (leakage in and/or leakage out) when the valve is closed

Note 1 to entry: See Figure 2.

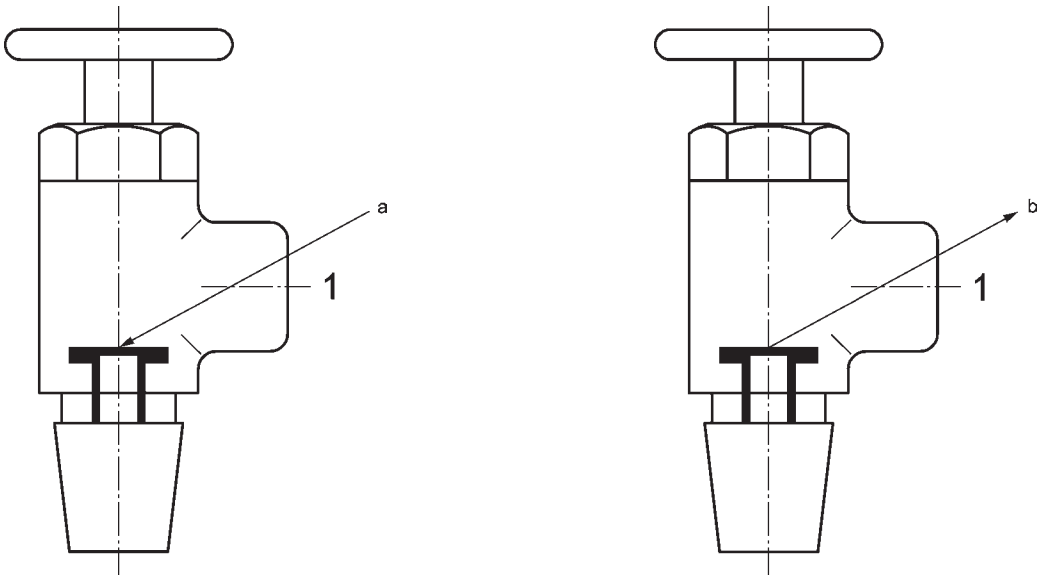

$p < p_a$ $p > p_a$

© ISO 2014 – All rights reserved

Documents
Document Sharing Hub
Full document details: BS EN ISO 10297:2014+A1:2017

Key

1 valve outlet connection (open)

a Leakage in (vacuum test).

b Leakage out.

p internal pressure

p_a atmospheric pressure

Figure 2 — Internal leak tightness

3.6
valve working pressure
p_w
settled pressure of a compressed gas at a uniform reference temperature of 15 °C in a full gas cylinder or cylinder bundle for which the valve is intended

Note 1 to entry: This definition does not apply to liquefied gases (e.g. carbon dioxide), or dissolved gases (e.g. acetylene).

Note 2 to entry: The valve working pressure is expressed in bar.

3.7
valve burst test pressure
p_{vbt}
minimum pressure applied to a valve during hydraulic burst pressure test

Note 1 to entry: The valve burst test pressure is expressed in bar.

3.8
valve test pressure
p_{vt}
minimum pressure applied to a valve during testing

Note 1 to entry: The valve test pressure is expressed in bar.

3.9
handwheel diameter
D
nominal value of twice the largest radius from the centre of the handwheel

Note 1 to entry: The handwheel diameter is expressed in mm.

3.10
[A1] minimum closing torque
T_c
torque necessary to be applied to a *valve operating device* (3.3) of a newly manufactured valve to obtain *internal leak tightness* (3.5) at *valve test pressure* (3.8) and room temperature

Note 1 to entry: The minimum closing torque is expressed in Nm. [A1]

3.11
endurance torque
T_e
closing torque applied during the endurance test

Note 1 to entry: The endurance torque is expressed in Nm.

© ISO 2014 – All rights reserved
Documents
Document Sharing Hub
Full document details: BS EN ISO 10297:2014+A1:2017

3.11.1
endurance torque at start
$T_{e,start}$
endurance torque (3.11) to be applied at the beginning of the endurance test

3.11.2
endurance torque at end
$T_{e,end}$
endurance torque (3.11) measured at the end of the endurance test to achieve *internal leak tightness* (3.5)

3.12
over torque
T_o
opening or closing torque (whichever is the lower value) applied to the *valve operating device* (3.3) to determine the level of torque which the *valve operating mechanism* (3.1) can tolerate and remain operable

Note 1 to entry: The over torque is expressed in Nm.

3.13
failure torque
T_f
opening or closing torque (whichever is the lower value) applied to the *valve operating device* (3.3) to obtain mechanical failure of the *valve operating mechanism* (3.1) and/or *valve operating device* (3.3)

Note 1 to entry: The failure torque is expressed in Nm.

3.14
total package mass
combined mass of a gas cylinder (including, for dissolved gases, any porous material and solvent), its valve(s), its permanent attachment(s) and its maximum allowed gas content

Note 1 to entry: Valve guards but not valve protection caps are examples of permanent attachments.

Note 2 to entry: The total package mass is expressed in kg.

3.15
main valve
valve which is fitted to a cylinder bundle's manifold isolating it from the main connection(s)

3.16
valve inlet connection
connection on the valve which connects the valve to the cylinder(s)

3.17
valve outlet connection
connection on the valve used to discharge the cylinder(s)

Note 1 to entry: For most valves this connection is also used for filling the cylinder(s).

3.18
valve filling connection
connection on the valve used to fill the cylinder(s)

Note 1 to entry: For some valves (e.g. VIPRs) the valve filling connection is different from the valve outlet connection.

3.19
NTP
normal temperature and pressure

[SOURCE: 20,0 °C (293,15 K), 1,013 bar absolute (0,101 3 MPa absolute)]

© ISO 2014 – All rights reserved

Documents
Document Sharing Hub
Full document details: BS EN ISO 10297:2014+A1:2017