BS EN ISO 10555-1:2023

BSI Standards Publication

Intravascular catheters — Sterile and single-use catheters

Part 1: General requirements

Documents
Document Sharing Hub

Full document details: BS EN ISO 10555-1:2023

National foreword

This British Standard is the UK implementation of EN ISO 10555-1:2023. It is identical to ISO 10555-1:2023. It supersedes BS EN ISO 10555-1:2013+A1:2017, which is withdrawn.

The UK participation in its preparation was entrusted to Technical Committee CH/84, Catheters and syringes.

A list of organizations represented on this committee can be obtained on request to its committee manager.

Contractual and legal considerations

This publication has been prepared in good faith, however no representation, warranty, assurance or undertaking (express or implied) is or will be made, and no responsibility or liability is or will be accepted by BSI in relation to the adequacy, accuracy, completeness or reasonableness of this publication. All and any such responsibility and liability is expressly disclaimed to the full extent permitted by the law.

This publication is provided as is, and is to be used at the recipient's own risk.

The recipient is advised to consider seeking professional guidance with respect to its use of this publication.

This publication is not intended to constitute a contract. Users are responsible for its correct application.

© The British Standards Institution 2023
Published by BSI Standards Limited 2023

ISBN 978 0 539 20327 1

ICS 11.040.25

Compliance with a British Standard cannot confer immunity from legal obligations.

This British Standard was published under the authority of the Standards Policy and Strategy Committee on 31 December 2023.

Amendments/corrigenda issued since publication

Date	Text affected

Documents
Document Sharing Hub

Full document details: BS EN ISO 10555-1:2023

EUROPEAN STANDARD

NORME EUROPÉENNE

EUROPÄISCHE NORM

EN ISO 10555-1

November 2023

ICS 11.040.25

Supersedes EN ISO 10555-1:2013

English Version

Intravascular catheters - Sterile and single-use catheters - Part 1: General requirements (ISO 10555-1:2023)

Cathéters intravasculaires - Cathéters stériles et non réutilisables - Partie 1: Exigences générales (ISO 10555-1:2023)

Intravaskuläre Katheter - Sterile Katheter zur einmaligen Verwendung - Teil 1: Allgemeine Anforderungen (ISO 10555-1:2023)

This European Standard was approved by CEN on 24 November 2023.

CEN members are bound to comply with the CEN/CENELEC Internal Regulations which stipulate the conditions for giving this European Standard the status of a national standard without any alteration. Up-to-date lists and bibliographical references concerning such national standards may be obtained on application to the CEN-CENELEC Management Centre or to any CEN member.

This European Standard exists in three official versions (English, French, German). A version in any other language made by translation under the responsibility of a CEN member into its own language and notified to the CEN-CENELEC Management Centre has the same status as the official versions.

CEN members are the national standards bodies of Austria, Belgium, Bulgaria, Croatia, Cyprus, Czech Republic, Denmark, Estonia, Finland, France, Germany, Greece, Hungary, Iceland, Ireland, Italy, Latvia, Lithuania, Luxembourg, Malta, Netherlands, Norway, Poland, Portugal, Republic of North Macedonia, Romania, Serbia, Slovakia, Slovenia, Spain, Sweden, Switzerland, Türkiye and United Kingdom.

EUROPEAN COMMITTEE FOR STANDARDIZATION
COMITÉ EUROPÉEN DE NORMALISATION
EUROPÄISCHES KOMITEE FÜR NORMUNG

CEN-CENELEC Management Centre: Rue de la Science 23, B-1040 Brussels

© 2023 CEN All rights of exploitation in any form and by any means reserved worldwide for CEN national Members.

Ref. No. EN ISO 10555-1:2023 E

Documents
Document Sharing Hub

Full document details: BS EN ISO 10555-1:2023

European foreword

This document (EN ISO 10555-1:2023) has been prepared by Technical Committee ISO/TC 84 "Devices for administration of medicinal products and catheters" in collaboration with Technical Committee CEN/TC 205 “Non-active medical devices” the secretariat of which is held by DIN.

This European Standard shall be given the status of a national standard, either by publication of an identical text or by endorsement, at the latest by May 2024, and conflicting national standards shall be withdrawn at the latest by May 2024.

Attention is drawn to the possibility that some of the elements of this document may be the subject of patent rights. CEN shall not be held responsible for identifying any or all such patent rights.

This document supersedes EN ISO 10555-1:2013.

Any feedback and questions on this document should be directed to the users’ national standards body/national committee. A complete listing of these bodies can be found on the CEN website.

According to the CEN-CENELEC Internal Regulations, the national standards organizations of the following countries are bound to implement this European Standard: Austria, Belgium, Bulgaria, Croatia, Cyprus, Czech Republic, Denmark, Estonia, Finland, France, Germany, Greece, Hungary, Iceland, Ireland, Italy, Latvia, Lithuania, Luxembourg, Malta, Netherlands, Norway, Poland, Portugal, Republic of North Macedonia, Romania, Serbia, Slovakia, Slovenia, Spain, Sweden, Switzerland, Türkiye and the United Kingdom.

Endorsement notice

The text of ISO 10555-1:2023 has been approved by CEN as EN ISO 10555-1:2023 without any modification.

Documents
Document Sharing Hub

Full document details: BS EN ISO 10555-1:2023

Contents

Page

Foreword ... **v**

1 Scope ... **1**

2 Normative references ... **1**

3 Terms and definitions ... **1**

4 Requirements ... **5**
- 4.1 Risk approach ... 5
- 4.2 Usability engineering ... 5
- 4.3 Sterilization ... 5
- 4.4 Shelf life ... 5
- 4.5 Detectability ... 5
- 4.6 Biocompatibility ... 5
- 4.7 Surface ... 5
- 4.8 Corrosion resistance ... 6
- 4.9 Peak tensile force ... 6
- 4.10 Freedom from leakage during pressurization ... 7
- 4.11 Freedom from leakage during aspiration ... 7
- 4.12 Hubs ... 7
- 4.13 Flowrate ... 8
- 4.14 Power injection burst pressure ... 8
- 4.15 Packaging system ... 8
- 4.16 Simulated use, kink and/or torque testing to consider depending on device design, intended use, and risk analysis ... 8
- 4.17 Coating integrity and/or particulate testing to consider depending on device design, intended use, and risk analysis ... 9
- 4.18 Distal tip stiffness testing to consider for neurovascular applications ... 9

5 Designation of nominal size ... **9**
- 5.1 Nominal outside diameter ... 9
- 5.2 Nominal inside diameter ... 9
- 5.3 Nominal effective length ... 9

6 Information to be supplied with the catheter ... **10**
- 6.1 General ... 10
- 6.2 Marking on the device and/or primary packaging ... 10
- 6.3 Instructions for use ... 11
- 6.4 Marking on the secondary packaging ... 11

Annex A (normative) **Test method for corrosion resistance** ... **12**

Annex B (normative) **Method for determining peak tensile force** ... **13**

Annex C (normative) **Test method for liquid leakage under pressure** ... **16**

Annex D (normative) **Test method for air leakage into hub assembly during aspiration** ... **18**

Annex E (normative) **Determination of flowrate through catheter** ... **20**

Annex F (normative) **Test for burst pressure under static conditions** ... **22**

Annex G (normative) **Power injection tests for flowrate and device pressure (only for products indicated for power injection)** ... **25**

Annex H (informative) **Units of measurement systems other than those specified in this document** ... **30**

Annex I (normative) **Test method for air leakage under water** ... **32**

Annex J (informative) **Rationale and guidance** ... **34**

Annex K (informative) **Test methods for distal tip stiffness for neurovascular applications** ... **41**

AVA Documents
Document Sharing Hub

© ISO 2023 – All rights reserved

Full document details: BS EN ISO 10555-1:2023

Bibliography **43**

© ISO 2023 – All rights reserved
Documents
Document Sharing Hub
Full document details: BS EN ISO 10555-1:2023

Foreword

ISO (the International Organization for Standardization) is a worldwide federation of national standards bodies (ISO member bodies). The work of preparing International Standards is normally carried out through ISO technical committees. Each member body interested in a subject for which a technical committee has been established has the right to be represented on that committee. International organizations, governmental and non-governmental, in liaison with ISO, also take part in the work. ISO collaborates closely with the International Electrotechnical Commission (IEC) on all matters of electrotechnical standardization.

The procedures used to develop this document and those intended for its further maintenance are described in the ISO/IEC Directives, Part 1. In particular, the different approval criteria needed for the different types of ISO document should be noted. This document was drafted in accordance with the editorial rules of the ISO/IEC Directives, Part 2 (see www.iso.org/directives).

ISO draws attention to the possibility that the implementation of this document may involve the use of (a) patent(s). ISO takes no position concerning the evidence, validity or applicability of any claimed patent rights in respect thereof. As of the date of publication of this document, ISO had not received notice of (a) patent(s) which may be required to implement this document. However, implementers are cautioned that this may not represent the latest information, which may be obtained from the patent database available at www.iso.org/patents. ISO shall not be held responsible for identifying any or all such patent rights.

Any trade name used in this document is information given for the convenience of users and does not constitute an endorsement.

For an explanation of the voluntary nature of standards, the meaning of ISO specific terms and expressions related to conformity assessment, as well as information about ISO's adherence to the World Trade Organization (WTO) principles in the Technical Barriers to Trade (TBT), see www.iso.org/iso/foreword.html.

This document was prepared by Technical Committee ISO/TC 84, *Devices for administration of medicinal products and catheters*, in collaboration with the European Committee for Standardization (CEN) Technical Committee CEN/TC 205, *Non-active medical devices,* in accordance with the Agreement on technical cooperation between ISO and CEN (Vienna Agreement).

This third edition cancels and replaces the second edition (ISO 10555-1:2013), which has been technically revised. It also incorporates the amendment ISO 10555-1:2013/Amd 1:2017.

The main changes are as follows:

— added definitions for “inside diameter”, “gauge length”, and “coating” in Clause 3;

— added clarification on requirements (Clause 4) related to:

  — peak tensile force (revised the NOTE in Table 1);

  — leakage during pressurization: option for air pressure test (Annex I);

  — power injection burst pressure.

— added new requirements (Clause 4) related to:

  — risk approach;

  — usability engineering;

  — shelf life;

  — packaging system;

  — simulated use, kink and torque;

© ISO 2023 – All rights reserved

Documents
Document Sharing Hub
Full document details: BS EN ISO 10555-1:2023

  - coating integrity, particulate;
  - distal tip stiffness.
- removed the requirements on side holes and distal tip;
- added text on “Nominal inside diameter for some applications” (Clause 5);
- added test details in the instructions for use for power injection (Clause 6);
- added reporting of maximum, minimum, standard deviation for variable data analysis in test reports;
- clarified “conditioning time” and “gauge length” (Annex B);
- clarified “minimum outside pressure requirement” (Annex D);
- introduced alternative test method using constant flowrate source (Annex G);
- replaced Figure H.1 in previous version with the new Table H.1;
- added new Annex I for alternative leakage under pressurization using air pressure;
- added new Annex J for rationale.

A list of all parts in the ISO 10555 series can be found on the ISO website.

Any feedback or questions on this document should be directed to the user’s national standards body. A complete listing of these bodies can be found at www.iso.org/members.html.

© ISO 2023 – All rights reserved
Documents
Document Sharing Hub
Full document details: BS EN ISO 10555-1:2023

Intravascular catheters — Sterile and single-use catheters —

Part 1: General requirements

1 Scope

This document specifies general requirements for intravascular catheters, supplied sterile and intended for single use, for any application.

This document does not apply to intravascular catheter accessories, e.g. those covered by ISO 11070.

2 Normative references

The following documents are referred to in the text in such a way that some or all of their content constitutes requirements of this document. For dated references, only the edition cited applies. For undated references, the latest edition of the referenced document (including any amendments) applies.

ISO 7886-1, *Sterile hypodermic syringes for single use — Part 1: Syringes for manual use*

ISO 10993-1, *Biological evaluation of medical devices — Part 1: Evaluation and testing within a risk management process*

ISO 11607-1, *Packaging for terminally sterilized medical devices — Part 1: Requirements for materials, sterile barrier systems and packaging systems*

ISO 14971, *Medical devices — Application of risk management to medical devices*

ISO 15223-1, *Medical devices — Symbols to be used with information to be supplied by the manufacturer — Part 1: General requirements*

ISO 80369-7, *Small-bore connectors for liquids and gases in healthcare applications — Part 7: Connectors for intravascular or hypodermic applications*

IEC 62366-1, *Medical devices — Part 1: Application of usability engineering to medical devices*

3 Terms and definitions

For the purposes of this document, the following terms and definitions apply.

ISO and IEC maintain terminology databases for use in standardization at the following addresses:

— ISO Online browsing platform: available at https://www.iso.org/obp

— IEC Electropedia: available at https://www.electropedia.org/

3.1
intravascular catheter
tubular device, single or multilumen, designed to be partially or totally inserted or implanted into the vascular system for diagnostic and/or therapeutic purposes

© ISO 2023 – All rights reserved

Documents
Document Sharing Hub
Full document details: BS EN ISO 10555-1:2023

3.2
distal end
end of the catheter inserted furthest into the patient

3.3
distal end configuration
shape of the catheter which is designed to facilitate its manual manipulation through the vascular system and the placement and anchoring of the distal tip in the chosen location

3.4
proximal end
access end
end of the catheter to which connection to another device can be made

3.5
hub
connector(s) at the *proximal end* (3.4) of the catheter which can either be integral with the catheter or be capable of being securely fitted to the *proximal end* (3.4) of the catheter

3.6
effective length
working length
usable length
length of the catheter, or pre- and *post-hydration* (3.11) lengths of hydratable catheters, that can be inserted into the body

Note 1 to entry: See Figure 1 where "*l*" is denoted as effective length.

© ISO 2023 – All rights reserved
Documents
Document Sharing Hub
Full document details: BS EN ISO 10555-1:2023

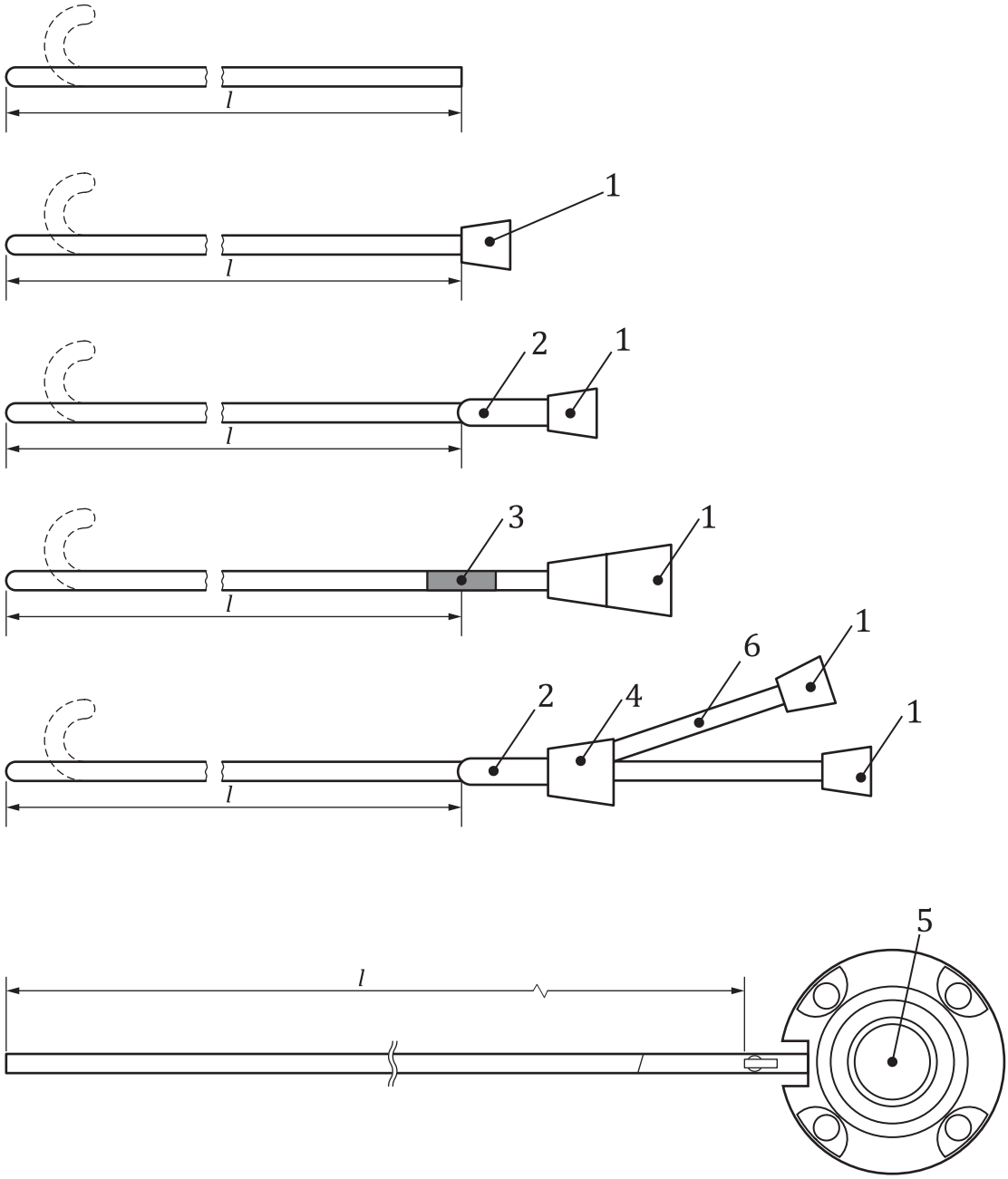

Key

l effective length
1 catheter hub
2 catheter strain reinforcement
3 length mark
4 junction
5 pre-connected port
6 sidearm

Figure 1 — Examples of effective length of catheters

3.7
outside diameter
largest diameter of the catheter or pre- and *post-hydration* (3.11) largest diameters of hydratable catheters over the *effective length* (3.6)

© ISO 2023 – All rights reserved

Documents
Document Sharing Hub
Full document details: BS EN ISO 10555-1:2023

3.8
inside diameter
largest diameter that can pass through a catheter lumen intended to deliver other devices

Note 1 to entry: See Annex J for additional information.

3.9
junction
joint
fixed connection
joining of one tube or more tubes with another tube or component where the assembly provides mechanical support in tension/compression during clinical use

3.10
hydratable intravascular catheter
intravascular catheter consisting of a material which, when subjected to an aqueous medium, results in an increase of more than 1 % of the effective length or 10 % or more of the *outside diameter* (3.7) of the effective length in *post-hydration* (3.11) state compared to pre-hydration

3.11
post-hydration
state of a *hydratable intravascular catheter* (3.10) after immersion in aqueous medium at (37 ± 2) °C for a minimum of 2 h or a shorter time upon appropriate clinical justification

3.12
power injection
injection of an imaging contrast agent with a constant-pressure source or constant-flowrate source capable of generating pressures greater than or equal to 689 kPa

3.13
primary packaging
packaging, which has direct contact with the device and/or maintains sterility

3.14
secondary packaging
packaging designed to contain one or more *primary packages* (3.13) and/or accessories

3.15
gauge length
length of the test piece between the grips of the tensile testing apparatus that elongates significantly during testing

Note 1 to entry: See Figure B.1.

Note 2 to entry: See Annex J for additional information.

3.16
coating
substance or material with any different property (e.g. antimicrobial, lubricity, antithrombogenicity) than the natural surface of the substrate that is intentionally added to cover the substrate

Note 1 to entry: The coating can partially or fully cover the substrate surface. Liquid lubricant is not considered as coating.

© ISO 2023 – All rights reserved
Documents
Document Sharing Hub
Full document details: BS EN ISO 10555-1:2023

4 Requirements

4.1 Risk approach

Risk analysis, risk evaluation, risk control, evaluation of residual risk acceptability shall be performed in accordance with ISO 14971.

NOTE See Annex J for additional information.

4.2 Usability engineering

A usability engineering program shall be developed and implemented in accordance with IEC 62366-1, which shall include addressing use risks and tests and/or assessments as part of the design verification and validation.

NOTE See Annex J for additional information.

4.3 Sterilization

The devices shall be sterilized by a validated method.

The devices shall fulfil the requirements specified in 4.4 to 4.18 after being sterilized by a sterilization cycle representative of the final manufacturing process.

NOTE See applicable clause(s) of the ISO 17665 series, ISO 11135 and the ISO 11137 series for appropriate methods of sterilization.

4.4 Shelf life

The impact of aging on product performance shall be considered based on risk assessment in order to support the shelf life.

4.5 Detectability

Parts of the catheter shall be detectable by X-ray or by other means (e.g. ultra-sound, MRI, etc.) if required as determined by the risk assessment.

Detectability shall be demonstrated by an appropriate test method (see, e.g. ASTM F640-20 or DIN 13273-7).

4.6 Biocompatibility

The catheter shall be free from biological hazard in accordance with the appropriate testing in ISO 10993-1.

4.7 Surface

When examined by normal or corrected to normal vision and with a minimum x2,5 magnification the external surface of the catheter shall appear free from foreign matter.

The external surface of the effective length of the catheter, including the distal end, shall be free from surface defects which could cause embolic risks or trauma to vessels.

If the catheter is lubricated, the lubricant shall not be visible as drops of fluid on the external surface when the catheter is examined under normal or corrected to normal vision.

© ISO 2023 – All rights reserved

Documents
Document Sharing Hub
Full document details: BS EN ISO 10555-1:2023

4.8 Corrosion resistance

Metallic components of the catheter intended for fluid path contact shall show no signs of corrosion when tested in accordance with the method given in Annex A.

4.9 Peak tensile force

Every section of the catheter shall be tested for peak tensile force in accordance with Annex B. Table 1 specifies the minimum peak tensile force for different sized tubular test pieces. Testing can be done on the complete device or different sections; however, minimum peak tensile force shall meet the requirements as specified in Table 1. See Figure 2 for examples of catheter sections and determination of effective outside diameter.

This document does not specify requirements for peak tensile force for tubing of less than 0,55 mm outside diameter (prehydration outside diameter for hydratable intravascular catheters). For those cases, the tensile test should be performed in accordance with Annex B and the peak tensile force shall be determined by the manufacturer based on risk assessment.

For a distal tip with a junction to the shaft tube, the peak tensile force shall be determined by the manufacturer based on risk assessment. For a distal tip of less than 3 mm with a junction for which a tensile test is not practical, the test method and requirements shall be determined by the manufacturer based on risk assessment.

For a distal tip of length less than 3 mm without a junction to the shaft tube, the tensile test is not required.

For a distal tip of length equal to or more than 3 mm without a junction to the shaft tube, the peak tensile force shall be determined by the manufacturer based on risk assessment.

The forces experienced during clinical use may be greater than the values listed in Table 1, e.g. the expected forces applied to a delivery system during clinical use to access the intended location, to deploy the device, or to withdraw the system. If the forces experienced during clinical use are determined by the manufacturer to be greater than the values listed in Table 1, the acceptance criteria for the peak tensile force of each test piece shall be as determined by the manufacturer based on risk assessment.

NOTE See Annex J for additional information.

Table 1 — Peak tensile force of catheter test pieces

Effective outside diameter range of tubular portion of test piece mm	Minimum peak tensile force *N*
≥ 0,55 < 0,75	3
≥ 0,75 < 1,15	5
≥ 1,15 < 1,85	10
≥ 1,85	15

NOTE 1 Values listed in Table 1 are not based on clinical data or forces that have been determined to be clinically-relevant. However, these values have been historically used to support functional performance and can be acceptable with appropriate rationale.

NOTE 2 See Annex J for additional information.

© ISO 2023 – All rights reserved
Documents
Document Sharing Hub
Full document details: BS EN ISO 10555-1:2023

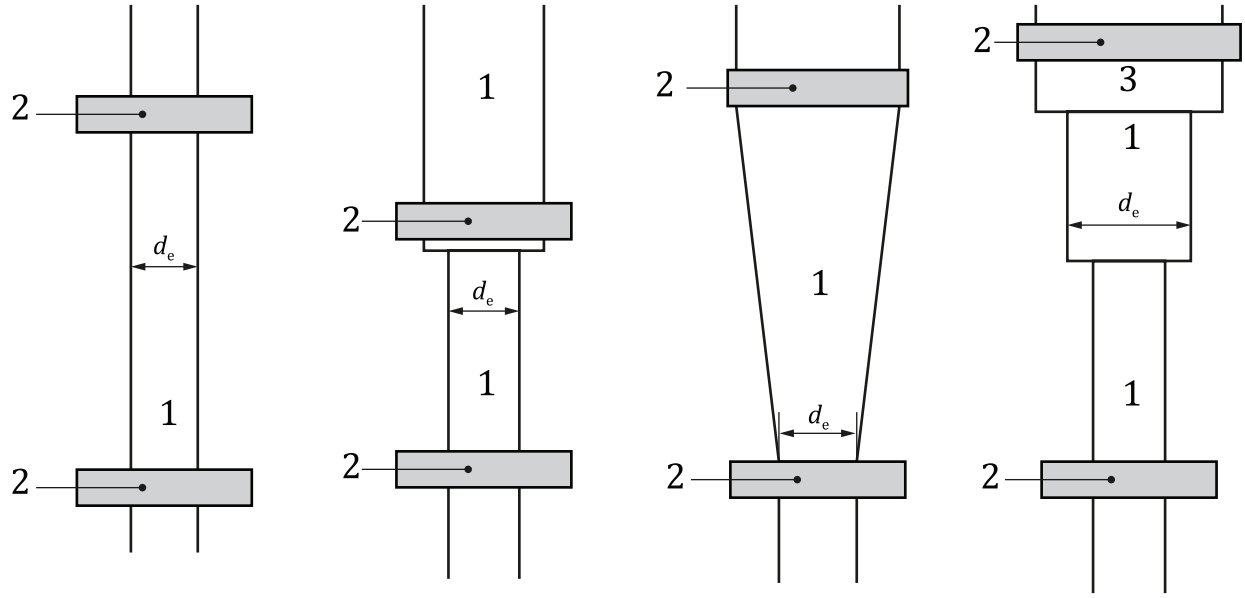

a) Straight tubing section **b) Junction between two sections of tubing** **c) Tapered tubing section** **d) Multiple junctions tested simultaneously**

Key

d_e effective outside diameter
1 tubing
2 grip
3 hub

Figure 2 — Illustration of effective outside diameter

NOTE See Annex J for additional information.

4.10 Freedom from leakage during pressurization

If subjected to liquid pressure during intended use, the hub or connection fitting assembly or any other part of the catheter shall not leak when tested using either liquid pressure as set out in Annex C or air pressure in accordance with Annex I. If a sample fails the air leakage under water test (see Annex I), it is acceptable to retest the sample using the method in Annex C.

For hydratable intravascular catheters, this requirement shall be met in both the pre- and post-hydration states.

NOTE See Annex J for additional information.

4.11 Freedom from leakage during aspiration

If subjected to aspiration during intended use, air shall not leak into the hub assembly during aspiration when tested in accordance with the method given in Annex D.

For hydratable intravascular catheters, this requirement shall be met in both the pre- and post-hydration states.

4.12 Hubs

If the catheter is supplied with either an integral or a separate hub, it shall be a female hub in accordance with ISO 80369-7.

© ISO 2023 – All rights reserved

Documents
Document Sharing Hub
Full document details: BS EN ISO 10555-1:2023

4.13 Flowrate

For devices for which flow rate is specified, when tested in accordance with Annex E for all catheter lumen indicated for gravity delivery of fluid, the flow rate for each lumen shall be a minimum of 80 % of that stated in the information supplied by the manufacturer for catheters of nominal outside diameter less than 1,0 mm or a minimum of 90 % of that stated in the information supplied by the manufacturer for catheters of nominal outside diameter equal to or greater than 1,0 mm.

If the flowrate through hydratable catheters is determined, it shall be determined in post-hydration states.

4.14 Power injection burst pressure

If a catheter lumen is indicated for power injection, it shall be tested in accordance with Annexes F and G. In Annex G, either test A or B may be used. The lumen burst pressure (in accordance with Annex F) shall exceed the peak pressure present in that lumen (in accordance with Annex G) when flowing at the maximum flowrate stated in the information supplied by the manufacturer.

If desired, each fluid path may be divided into zones along its length and different pressure specifications can be assigned for each zone. A rationale shall be provided supporting why the pressure specification for each zone is sufficient. For example, analysis and/or empirical testing can be an appropriate justification for lower pressures (than that used in accordance with Annex G) in distal zones.

NOTE See Annex J for additional information.

4.15 Packaging system

Design of sterile barrier systems and packaging systems for the catheter shall be in accordance with the requirements of ISO 11607-1.

NOTE ISO 11607-2 describes the process development and validation requirements for forming, sealing and assembly processes and addresses controls during normal operations.

4.16 Simulated use, kink and/or torque testing to consider depending on device design, intended use, and risk analysis

Simulated use testing, kink testing, and torque strength testing shall be considered (if applicable) for devices that are intended to traverse anatomy that might expose it to multiple modes of mechanical loading in sufficiently challenging clinical setting (e.g. guide catheters intended to reach neurovasculature, PTA balloons intended to be used in a contralateral antegrade approach) based on risk assessment.

— For simulated use testing, the device shall perform as intended in a sufficiently challenging simulated clinical setting without damage that could affect functionality or safety of the device.

— For kink testing, the device shall resist kinking when used in a sufficiently challenging radius of curvature.

— For torque testing, the device shall resist damage that can affect functionality or safety of the device when subjected to sufficiently challenging torque.

Clinical use conditions or scientific justification shall be used to establish methods and criteria depending on device design, intended use, and risk analysis.

© ISO 2023 – All rights reserved
Documents
Document Sharing Hub
Full document details: BS EN ISO 10555-1:2023