BS EN ISO 10715:2022

BSI Standards Publication

Natural gas — Gas sampling

Documents
Document Sharing Hub

Full document details: BS EN ISO 10715:2022

National foreword

This British Standard is the UK implementation of EN ISO 10715:2022. It is identical to ISO 10715:2022. It supersedes BS EN ISO 10715:2001, which is withdrawn.

The UK participation in its preparation was entrusted to Technical Committee PTI/15, Natural Gas and Gas Analysis.

A list of organizations represented on this committee can be obtained on request to its committee manager.

Contractual and legal considerations

This publication has been prepared in good faith, however no representation, warranty, assurance or undertaking (express or implied) is or will be made, and no responsibility or liability is or will be accepted by BSI in relation to the adequacy, accuracy, completeness or reasonableness of this publication. All and any such responsibility and liability is expressly disclaimed to the full extent permitted by the law.

This publication is provided as is, and is to be used at the recipient's own risk.

The recipient is advised to consider seeking professional guidance with respect to its use of this publication.

This publication is not intended to constitute a contract. Users are responsible for its correct application.

© The British Standards Institution 2022
Published by BSI Standards Limited 2022

ISBN 978 0 539 05394 4

ICS 75.060

Compliance with a British Standard cannot confer immunity from legal obligations.

This British Standard was published under the authority of the Standards Policy and Strategy Committee on 30 November 2022.

Amendments/corrigenda issued since publication

Date	Text affected

Documents
Document Sharing Hub

Full document details: BS EN ISO 10715:2022

EUROPEAN STANDARD

NORME EUROPÉENNE

EUROPÄISCHE NORM

EN ISO 10715

October 2022

ICS 75.060

Supersedes EN ISO 10715:2000

English Version

Natural gas - Gas sampling (ISO 10715:2022)

Gaz naturel - Échantillonnage de gaz (ISO 10715:2022)

Erdgas - Probenahme (ISO 10715:2022)

This European Standard was approved by CEN on 7 July 2022.

CEN members are bound to comply with the CEN/CENELEC Internal Regulations which stipulate the conditions for giving this European Standard the status of a national standard without any alteration. Up-to-date lists and bibliographical references concerning such national standards may be obtained on application to the CEN-CENELEC Management Centre or to any CEN member.

This European Standard exists in three official versions (English, French, German). A version in any other language made by translation under the responsibility of a CEN member into its own language and notified to the CEN-CENELEC Management Centre has the same status as the official versions.

CEN members are the national standards bodies of Austria, Belgium, Bulgaria, Croatia, Cyprus, Czech Republic, Denmark, Estonia, Finland, France, Germany, Greece, Hungary, Iceland, Ireland, Italy, Latvia, Lithuania, Luxembourg, Malta, Netherlands, Norway, Poland, Portugal, Republic of North Macedonia, Romania, Serbia, Slovakia, Slovenia, Spain, Sweden, Switzerland, Türkiye and United Kingdom.

EUROPEAN COMMITTEE FOR STANDARDIZATION
COMITÉ EUROPÉEN DE NORMALISATION
EUROPÄISCHES KOMITEE FÜR NORMUNG

CEN-CENELEC Management Centre: Rue de la Science 23, B-1040 Brussels

© 2022 CEN All rights of exploitation in any form and by any means reserved worldwide for CEN national Members.

Ref. No. EN ISO 10715:2022 E

Documents
Document Sharing Hub

Full document details: BS EN ISO 10715:2022

European foreword

This document (EN ISO 10715:2022) has been prepared by Technical Committee ISO/TC 193 "Natural gas" in collaboration with Technical Committee CEN/TC 238 “Test gases, test pressures, appliance categories and gas appliance types” the secretariat of which is held by AFNOR.

This European Standard shall be given the status of a national standard, either by publication of an identical text or by endorsement, at the latest by April 2023, and conflicting national standards shall be withdrawn at the latest by April 2023.

Attention is drawn to the possibility that some of the elements of this document may be the subject of patent rights. CEN shall not be held responsible for identifying any or all such patent rights.

This document supersedes EN ISO 10715:2000.

Any feedback and questions on this document should be directed to the users’ national standards body/national committee. A complete listing of these bodies can be found on the CEN website.

According to the CEN-CENELEC Internal Regulations, the national standards organizations of the following countries are bound to implement this European Standard: Austria, Belgium, Bulgaria, Croatia, Cyprus, Czech Republic, Denmark, Estonia, Finland, France, Germany, Greece, Hungary, Iceland, Ireland, Italy, Latvia, Lithuania, Luxembourg, Malta, Netherlands, Norway, Poland, Portugal, Republic of North Macedonia, Romania, Serbia, Slovakia, Slovenia, Spain, Sweden, Switzerland, Türkiye and the United Kingdom.

Endorsement notice

The text of ISO 10715:2022 has been approved by CEN as EN ISO 10715:2022 without any modification.

Documents
Document Sharing Hub

Full document details: BS EN ISO 10715:2022

Contents

Page

Foreword ... **vi**
Introduction ... **vii**
1 Scope ... **1**
2 Normative references ... **1**
3 Terms and definitions ... **1**
4 Safety considerations ... **4**
5 Principles of sampling ... **4**
6 The concept of representative sample ... **4**
7 Types of sampling ... **5**
7.1 Sampling method considerations ... 5
7.2 Spot sampling ... 6
7.2.1 General ... 6
7.2.2 Fill-and-empty method ... 6
7.2.3 Controlled-rate method ... 7
7.2.4 Evacuated-cylinder method ... 7
7.2.5 Helium pre-fill method ... 7
7.2.6 Floating-piston cylinder method ... 7
7.2.7 Single cavity sample cylinder ... 7
7.2.8 Sampling frequency ... 7
7.3 Incremental sampling (continuous or composite) ... 9
7.3.1 General considerations ... 9
7.3.2 Intervals ... 9
7.3.3 System considerations ... 9
7.3.4 Monitoring the filling process ... 10
7.3.5 Cylinder tracking ... 10
7.3.6 Overpressure protection ... 10
7.4 Online or direct sampling ... 10
7.4.1 General considerations ... 10
7.4.2 Automatic drainage ... 12
7.4.3 Reducing the pressure ... 12
7.4.4 Inert-gas purging ... 13
7.4.5 Safety/pressure relief valve ... 13
7.4.6 Heating of sample line ... 13
8 Sampling location ... **13**
8.1 General ... 13
8.2 Sampling place ... 13
8.2.1 General ... 13
8.2.2 Relevant gas ... 14
8.2.3 Undisturbed gas ... 14
8.2.4 Access ... 14
8.3 Sampling position ... 15
8.4 Sampling point ... 15
9 Ideal implementation of gas sampling ... **16**
9.1 General ... 16
9.2 Gas sorption ... 16
9.2.1 General ... 16
9.2.2 Surface treatment ... 17
9.2.3 Sorption considerations regarding sampling equipment ... 17
9.2.4 Equilibrating of sampling equipment ... 17
9.3 Materials used in sampling ... 18
9.3.1 General considerations ... 18

© ISO 2022 – All rights reserved

AVA Documents
Document Sharing Hub
Full document details: BS EN ISO 10715:2022

9.3.2 Steel grades 19
9.3.3 Epoxy coatings 19
9.3.4 Other polymers 19
9.3.5 Rubbers 19
9.3.6 Bimetallic corrosion 19
9.4 Sample contamination 19
9.4.1 Cleanliness 19
9.4.2 Cleaning sampling systems 19
9.4.3 Pre-charging of sample cylinders 20
9.5 Sample condensation 20
9.5.1 Temperature 20
9.5.2 Pressure reduction and Joule Thomson cooling 20
9.5.3 Condensation and revaporization 22
9.6 Disturbance of the flow through the sampling system 24
9.7 Delay time 24
9.7.1 Direct sampling method 24
9.7.2 Indirect sampling method 25

10 Sampling equipment 26
10.1 General 26
10.2 Probes 27
10.2.1 General 27
10.2.2 Straight-tube probe 27
10.2.3 Probe regulator 28
10.2.4 Pitot probe 29
10.3 Tubings 30
10.3.1 Sampling and sample lines 30
10.3.2 Bypass constructions 31
10.4 Filters, membranes and separators 31
10.5 Valves and safety valves 32
10.6 Fittings 33
10.7 Flow monitoring and control 33
10.8 Pressure reducers 33
10.9 Pressure sensor/manometers 33
10.10 Heating devices 33
10.11 Seals and lubricants 34
10.12 Sample containers or cylinders 34
10.12.1 General 34
10.12.2 Standard or single cavity cylinder 35
10.12.3 Floating-piston cylinders or Constant Pressure cylinders 35
10.13 Concentration devices 36
10.14 Number and sequence of equipment 37

11 Verification of the system 38

12 Troubleshooting 39

Annex A (informative) **Purposes of sampling, panel of compounds and information in the sampling report 41**

Annex B (informative) **Procedures for sampling 42**

Annex C (informative) **Gas sorption effect: adsorption/desorption 49**

Annex D (informative) **Cleaning of steel sampling cylinders 50**

Annex E (informative) **Joule-Thomson cooling and phase behaviour 51**

Annex F (informative) **Vortex shedding and associated problems 54**

Annex G (informative) **Guidelines for the calculation of the residence time 58**

Annex H (informative) **Protocol for gas sampling system verification 66**

Documents
Document Sharing Hub

© ISO 2022 – All rights reserved

Full document details: BS EN ISO 10715:2022

Annex I (informative) **Number of samples** **68**
Bibliography **70**

© ISO 2022 – All rights reserved

Documents
Document Sharing Hub
Full document details: BS EN ISO 10715:2022

Foreword

ISO (the International Organization for Standardization) is a worldwide federation of national standards bodies (ISO member bodies). The work of preparing International Standards is normally carried out through ISO technical committees. Each member body interested in a subject for which a technical committee has been established has the right to be represented on that committee. International organizations, governmental and non-governmental, in liaison with ISO, also take part in the work. ISO collaborates closely with the International Electrotechnical Commission (IEC) on all matters of electrotechnical standardization.

The procedures used to develop this document and those intended for its further maintenance are described in the ISO/IEC Directives, Part 1. In particular, the different approval criteria needed for the different types of ISO documents should be noted. This document was drafted in accordance with the editorial rules of the ISO/IEC Directives, Part 2 (see www.iso.org/directives).

Attention is drawn to the possibility that some of the elements of this document may be the subject of patent rights. ISO shall not be held responsible for identifying any or all such patent rights. Details of any patent rights identified during the development of the document will be in the Introduction and/or on the ISO list of patent declarations received (see www.iso.org/patents).

Any trade name used in this document is information given for the convenience of users and does not constitute an endorsement.

For an explanation of the voluntary nature of standards, the meaning of ISO specific terms and expressions related to conformity assessment, as well as information about ISO's adherence to the World Trade Organization (WTO) principles in the Technical Barriers to Trade (TBT), see www.iso.org/iso/foreword.html.

This document was prepared by Technical Committee ISO/TC 193, *Natural Gas*, Subcommittee SC 1, *Natural gas analysis*, in collaboration with the European Committee for Standardization (CEN) Technical Committee CEN/TC 238, *Test gases, test pressures and categories of appliances*, in accordance with the Agreement on technical cooperation between ISO and CEN (Vienna Agreement).

This second edition cancels and replaces the first edition (ISO 10715:1997), which has been technically revised.

The main changes are as follows:

— This new edition has placed a significant relevance on regular service, maintenance and validation of installed sample systems which previously have not been given proper attention. Sample systems, or at least the fixed/installed portion of them, have all too often been installed and forgotten without realization that through use they become more and more contaminated leading to distortions of the composition of the gas being sampled.

— Introduction of new sampling devices.

Any feedback or questions on this document should be directed to the user's national standards body. A complete listing of these bodies can be found at www.iso.org/members.html.

© ISO 2022 – All rights reserved
Documents
Document Sharing Hub
Full document details: BS EN ISO 10715:2022

Introduction

The composition, quality, and properties of natural gas vary according to amongst others its source, level of processing, natural mixing at interconnection points, storage facilities, blending stations, fluctuating demand for some of its derivatives such as LPG (Liquefied Petroleum Gases), and increasingly the need to transport unconventional and renewable gases in the same network etc.

The variations that occur are closely monitored and controlled to ensure safety of the general public as well as operational staff, plant, equipment and the gas infrastructures in general. Additionally and commercially critical the energy content of the gas differs with these variations and is very accurately monitored for billing and fiscal purposes because of the very large sums of money involved.

The variations that occur can be best collectively grouped under the generic term “Gas Quality” which is subsequently referred to as GQ in this document.

For monitoring and controlling GQ, samples are taken at many and various stages along the way and analysed. Such samples are taken under many different process parameters with a need to always ensure that any gas that is subsequently analysed for such monitoring purposes is truly representative of the bulk.

Methods of measuring GQ are well specified in numerous ISO standards as are the means of calibrating such measuring instruments, however all those measurements and calibrations are all but futile if the samples used for making such measurements are not representative.

This document provides means to ensure sampling systems and sampling processes are designed, located, installed, operated, and maintained such that samples obtained are representative of the bulk to which they are attributed. It also specifies comprehensive information on the way that samples can be contaminated, altered, modified or degraded and methods, means and procedures for ensuring that the sample remains representative from the start of the sampling process to the point where the sample is presented to the analytical device.

© ISO 2022 – All rights reserved

Documents
Document Sharing Hub
Full document details: BS EN ISO 10715:2022

Documents
Document Sharing Hub

Natural gas — Gas sampling

WARNING — General quality aspects of natural gas are detailed in ISO 13686[1]. However, it is possible that the standard does not cover all the trace constituents that are increasingly necessary to monitor for various reasons.

1 Scope

This document gives means for ensuring that samples of natural gas and natural gas substitutes that are conveyed into transmission and distribution grids are representative of the mass to which they are allocated.

NOTE To ensure that a particular gas is taken into account in the standard, please see Annex A.

This document is applicable for sampling at sites and locations where interchangeability criteria, energy content and network entry conditions are measured and monitored and is particularly relevant at cross border and fiscal measurement stations. It serves as an important source for control applications in natural gas processing and the measurement of trace components.

This document is applicable to natural dry gas (single phase - typically gas transiting through natural gas pipelines) sampling only. On occasion a natural gas flow can have entrained liquid hydrocarbons. Attempting to sample a wet natural gas flow introduces the possibility of extra unspecified uncertainties in the resulting flow composition analysis. Sampling a wet gas (two or three phases) flow is outside the scope of this document.

This document does not apply to the safety issues associated with gas sampling.

2 Normative references

The following documents are referred to in the text in such a way that some or all of their content constitutes requirements of this document. For dated references, only the edition cited applies. For undated references, the latest edition of the referenced document (including any amendments) applies.

ISO 14532, *Natural gas — Vocabulary*

3 Terms and definitions

For the purposes of this document, the terms and definitions from ISO 14532 and the following apply.

ISO and IEC maintain terminological databases for use in standardization at the following addresses:

— ISO Online browsing platform: available at https://www.iso.org/obp

— IEC Electropedia: available at https://www.electropedia.org/

3.1
absorption
extraction of one or more components from a mixture of gases when brought into contact with a liquid

Note 1 to entry: The assimilation or extraction process causes (or is accompanied by) a physical or chemical change, or both, in the sorbent material.

Note 2 to entry: The gaseous components are retained by capillary, osmotic, chemical, or solvent action.

EXAMPLE Removal of water from natural gas using glycol.

© ISO 2022 – All rights reserved

Documents
Document Sharing Hub
Full document details: BS EN ISO 10715:2022

[SOURCE: ISO 14532:2014, 2.2.2.6]

3.2
adsorption
retention, by physical or chemical forces of gas molecules, dissolved substances, or liquids by the surfaces of solids or liquids with which they are in contact

Note 1 to entry: For example, retention of methane by carbon.

[SOURCE: ISO 14532:2014, 2.2.2.7]

3.3
contaminant
constituent in very low levels, such as particulates, glycol, compressor oil, etc., that are assumed to be intrusive and not part of the gas to be sampled

Note 1 to entry: Such contaminants are generally harmful to the analytical equipment and if they enter the sampling process they need to be removed from the sample before it enters the analyser. However, once the contaminants enter the sampling process they continue to influence any following sample that come into contact with them. Over a period of time the accumulation of contamination in the sampling system can have a profound effect on the sample such that it is no longer representative of the mass.

Note 2 to entry: Contaminants are not to be confused with trace components that are inherent to the gas to be sampled.

3.4
desorption
removal of a sorbed substance by the reverse process of adsorption or absorption

Note 1 to entry: From solution in a liquid phase for example.

[SOURCE: ISO 14532:2014, 2.2.2.8, modified — Note 1 to entry added.]

3.5
direct sampling
sampling in situations where there is a direct connection between the natural gas to be sampled and the analytical unit

3.6
floating-piston cylinder
container which has a moving piston separating the sample from a buffer gas, where the pressures are in balance on both sides of the piston

3.7
gas sorption effect
physical process whereby some gases are adsorbed onto or desorbed from the surfaces of a solid without transformation of the molecules

Note 1 to entry: The force of attraction between some gases and solids is purely physical and depends on the nature of the participating material. Natural gas can contain several components that exhibit strong sorption effects. Special care should be taken when determining trace concentrations such as heavy hydrocarbons, water, sulfur compounds, mercury and hydrogen.

[SOURCE: ISO 14532:2014, 2.3.4.6]

3.8
high-pressure natural gas
natural gas with a pressure exceeding 0,2 MPa

3.9
hydrocarbon dew point
temperature, at a given pressure, at which hydrocarbon vapour condensation begins

© ISO 2022 – All rights reserved
Documents
Document Sharing Hub
Full document details: BS EN ISO 10715:2022

3.10
incremental sampler
sampler which accumulates a series of spot samples into one composite sample

3.11
indirect sampling
sampling in situations where there is no direct connection between the natural gas to be sampled and the analytical unit

3.12
liquid separator
unit, in the sample line, used to collect liquid fall-out

3.13
purging time
period of time during which a sample purges a piece of equipment

3.14
representative sample
sample having the same composition as the natural gas it is attributed to, when the latter is considered as a homogeneous whole

[SOURCE: ISO 14532:2014, 2.3.4.2]

3.15
residence time
time it takes for a sample to flow through a piece of equipment

3.16
retrograde condensation
production of a liquid phase of heavy hydrocarbons at a particular pressure and temperature where, at that same temperature, the gas stays in a single phase at a higher pressure as well as at a lower pressure

Note 1 to entry: Retrograde behaviour describes the non-ideal phase properties of hydrocarbon gas mixtures, such as natural gas.

3.17
sample container
container for collecting the gas sample when indirect sampling is necessary

3.18
sample line
line provided to transfer a sample of the gas from the *sampling point* (3.21) to the sampling device or the analytical unit

Note 1 to entry: Devices necessary to prepare the sample for transportation and analysis (conditioning unit) can be part of it.

3.19
sample probe
device inserted into the gas source, used to extract a sample and to which a *sample line* (3.18) is connected

3.20
sampling place
whereabouts along the gas pipeline or on the process plant where the *sample probe* (3.19) is located

3.21
sampling point
exact point in space defined by the *sampling place* (3.20), the *sampling position* (3.22) and by the location of the inlet on the *sample probe* (3.19)

© ISO 2022 – All rights reserved

Documents
Document Sharing Hub
Full document details: BS EN ISO 10715:2022

3.22
sampling position
location within the cross-sectional area of the gas pipeline or process plant at the *sampling place* from where a sample is taken

3.23
spot sample
sample of specified volume taken at a specified place at a specified time from a stream of gas

3.24
trace component
component present at very low levels

Note 1 to entry: Trace components generally include hydrocarbons or groups of hydrocarbons above n-pentane and other components listed in ISO 14532.

3.26
wetted surface
surface of the material in contact with the sampled gas

4 Safety considerations

The use of this document can involve working with high pressure flammable gases and other hazardous materials which can be located in areas designated as hazardous (potentially explosive and or toxic atmospheres). This document does not address the safety issues associated with such situations. It is the user's responsibility to establish appropriate design rules, installation, operating, testing and maintenance procedures for pressurized equipment, equipment located in potentially hazardous areas, the control, handling and transportation of substances potentially hazardous to health, etc.

International and national regulations on safety requirements should be followed closely and carry more weight than this document.

5 Principles of sampling

Natural gas sampling is the process of acquiring a sample from a source of interest, conditioning the sample (where necessary) and delivering the sample to an analytical instrument, either directly or indirectly via a vessel or other transport medium.

The methods and equipment for each of these steps are described within this document.

The purpose of the sampling system is to ensure that the sample acquired is representative of the source gas desired and that in the process of delivering the sample to the analytical instrument the chemical and physical state remain unchanged, even on a molecular level.

Considering the equipment is relied on to fulfil this purpose for many years of operation, careful consideration should be applied to the design (considering application-specific conditions and measurement objectives), manufacturing, operation, maintenance and performance evaluation of the system.

6 The concept of representative sample

In order to show that any information gained from a sample of natural gas is truly representative of the whole quantity to which the information is to be attributed we use the term "representative sample"

A representative sample is established by two main criteria:

a) The sample is not altered in any way, or more realistically in any avoidable way, during the process of collecting, handling, containing or preparing the sample for analysis or measurement. The condition of the sample being the same in composition and phase -absolute or essential sameness

© ISO 2022 – All rights reserved
AVA Documents Document Sharing Hub
Full document details: BS EN ISO 10715:2022

as the mass from which it was taken for the quality/analyte under consideration - is considered as being identical.

b) The sample is taken at a sample point where we can be sure that it is actually from the bulk to which the information is to be applied at a known time or time period. This requires a matching in time or a synchronization of analytical results to the mass. This is considered as being pertinent.

7 Types of sampling

7.1 Sampling method considerations

The main function of sampling is to take an adequate sample that is representative of the gas. The main distinction in sampling is between direct and indirect sampling methods. In the direct sampling method, the sample is drawn from a stream and directly transferred to the analytical unit. In the indirect sampling method, the sample is stored in a sample container before it is transferred to the analytical unit. The main classifications of the indirect sampling method are spot sampling or incremental sampling. Incremental sampling regarding regasified LNG is described in ISO 8943[17].

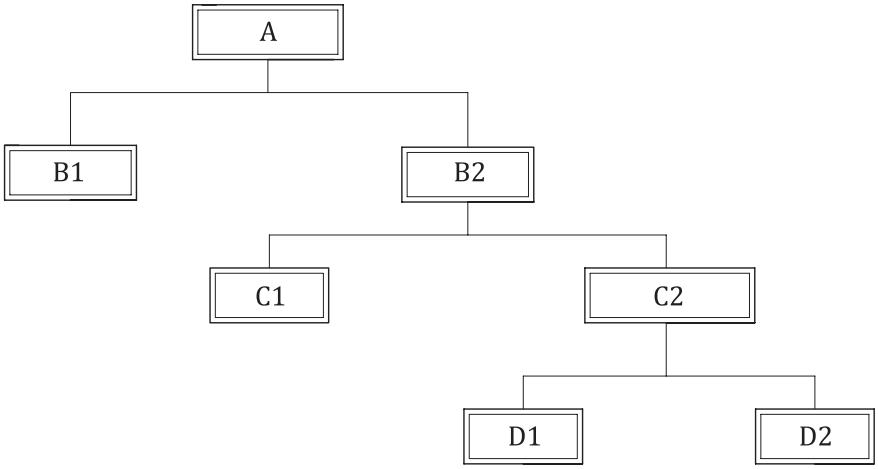

Key

A sampling
B1 direct
B2 indirect
C1 spot
C2 incremental
D1 time
D2 flow

Figure 1 — Survey of direct and indirect sampling methods

The information needed from the analysis of natural gas falls into two basic categories: averaged and limit values.

— Averaged values:

A typical example is the calorific value. Custody transfer requires the time- or flow-averaged calorific value. Commercial agreements determine the period and method of averaging.

— Limit values:

© ISO 2022 – All rights reserved

Documents
Document Sharing Hub
Full document details: BS EN ISO 10715:2022

Most gas custody transfer contracts contain specification limits on composition or on gas properties. Direct sampling can be applied, but often the requirements are such that also indirect sampling has to be applied.

7.2 Spot sampling

7.2.1 General

This clause specifies a method of indirect sampling in which a suitable container is filled with the sample. The sample is subsequently transported to the place of analysis.

Spot sampling is a form of sampling that is representative of what is in the pipeline at the moment that the sample is being taken. Spot sampling may be used for well or feed assessment, periodic stream assessment, result verification, process verification, trouble shooting and auditing purposes.

Spot sampling is a form of sampling that is taken from a single location and a single point in time and provides a sample of what was in the pipeline when the technician extracted the sample.

The interval between samples should be specified by the user, based on safety or process criticality of the results and stability of the gas quality (see 7.2.8).

The sample is extracted by utilizing one of several approved methods for taking spot samples, such as: the fill and empty method, the Helium pop method, the continuous purge, constant pressure method or another proven and tested method of extraction. Most samples are gathered in a standard, single cavity sample cylinder or a constant pressure piston style sample cylinder.

While valuable information can be gathered by this method, it shall always be noted that the sample represents what was present at the time of sampling. It is not representative of the sample location for the next week or month, unless it is from a single gas well that has a long history of producing the same gas and gas content. It is worthy to note that an older field begins to get richer and richer near the end of its life. The gas quality could stay the same for 10 years and then begin to change near the end of its field production life.

Annex B on low pressure sampling describes a method of obtaining spot samples from a low pressure natural gas distribution system using a glass vessel. Other specialist vessels such as inert polymeric bags are available for niche applications.

Methods suited for high and low pressure spot sampling are:

— fill and empty;

— controlled rate;

— evacuated container;

— helium pre-fill – (helium pop);

— floating-piston cylinder;

— single cavity sample cylinder.

7.2.2 Fill-and-empty method

This method is applicable when the sample container temperature is equal to or greater than the source temperature. The source pressure shall be above atmospheric pressure. A detailed example procedure is given in B.2.

© ISO 2022 – All rights reserved
Documents
Document Sharing Hub
Full document details: BS EN ISO 10715:2022

7.2.3 Controlled-rate method

In this method, a needle valve is used to control the sample flow rate. This method is applicable when the sample container temperature is equal to or greater than the source temperature. The source pressure shall be above atmospheric pressure. B.3 gives a detailed example of this method.

7.2.4 Evacuated-cylinder method

In this method, a previously evacuated cylinder is used to gather the sample. This method is applicable when the source pressure is above or below atmospheric pressure and the source temperature is greater or less than the sample container temperature. The valves and fittings on the sample cylinder shall be in good condition and there shall be no leaks. B.4 gives an example of a detailed procedure.

7.2.5 Helium pre-fill method

This is similar to the evacuated-cylinder method except that a helium pre-fill is used to keep the container "air free" prior to sampling. It is used in those cases when helium is not to be measured, and preferably can be ignored, for example analysis by gas chromatography with helium carrier gas.

7.2.6 Floating-piston cylinder method

By this method, a sample is drawn into a floating-piston cylinder maintained at pipeline pressure and with heat-traced sample lines.

7.2.7 Single cavity sample cylinder

A single cavity cylinder used for the collection of a sample for analysis. Typically, the cylinder is stainless steel and formed with spun ends and tapped at each end of the cylinder. Some designs can only have a single tapped end. The most common sizes are 300 ml, 500 ml and 1 000 ml, with other volumes available. The cylinder has a valve and a safety relief at one end and a valve at the other end.

7.2.8 Sampling frequency

7.2.8.1 General considerations

Information on the properties of the gas stream in the past and about expected (systematic) future changes determines the sampling frequency. Generally, pipeline gas composition can have daily, weekly, monthly, semi-annual and seasonal variations. Compositional variations can also occur because of gas treatment equipment and reservoir changes. All of these environmental and operational considerations shall be taken into account when selecting a sampling interval.

These considerations may be supported by the statistical approach given below.

An appropriate number of samples may be calculated based on the required (target) uncertainty of the averaged quantities. (Strictly speaking, the approach takes into account the precision constituents of the combined measurement uncertainty).

Formula (1) for calculating the appropriate number of samples is as follows (details are described in Annex I):

$$n = \left(t \times \frac{s}{U_{\mathrm{tg}}} \right)^2 \tag{1}$$

Where

U_{tg} is the target expanded uncertainty of the average quantity value;

© ISO 2022 – All rights reserved

Documents
Document Sharing Hub
Full document details: BS EN ISO 10715:2022

n is the number of samples to be taken in a defined period;

s is the experimental standard deviation of the individual measurements;

t is Student's t-statistic.

This formula shall be solved by iteration: an initial value of n is chosen together with the respective t value for (n − 1) degrees of freedom, this t value is used to calculate a revised value of n, which is used, in turn, to give a new value of t. The level of uncertainty, the number of samples and the standard deviation shall be taken over the same period of time.

7.2.8.2 Acceptable target uncertainty

There are two different situations with regard to the target uncertainty.

In the first case a target uncertainty related to the averaged quantity values is explicitly specified in the custody transfer contract. A typical example is the calorific value.

In the other situation only limit values are specified for the gas composition or property, but not an uncertainty. In these cases, the target uncertainty may be evaluated based on the decision rule used while assessing compliance with the specified limits, which, in turn, depends upon the acceptable risk level. For example, when the decision rule involves a guard band equal to the expanded uncertainty and it should ensure a low probability of incorrect statement of compliance, the difference between the last measured value, or the last year's average, and the limit value may be taken as a target expanded uncertainty.

More details on setting the target uncertainty may be found in the Eurachem/CITAC Guide[9].

7.2.8.3 Student's *t*-statistic

Student's t-statistic allows for the finite sample size, and is to be found in standard statistical tables. The value depends on the claimed confidence interval (typically 95 %) and the "degrees of freedom", here to be taken as the number of measurements minus one (n − 1).

EXAMPLE 1

Determination of the monthly average caloric value:

d = 0,4 % (level of uncertainty required from custody transfer contract for monthly averaged value) s = 0,6 % (estimated variation over a one-month period) First estimate, taking n = 7

t = 2,45 for 6 degrees of freedom and a confidence level of 0,975 single-sided (equals 0,95 double-sided)

$$n^{\frac{1}{2}} = 2,45 \times \frac{0,6}{0,4}$$

n = 14

First iteration, taking n = 14:

recalculate for t = 2,16 for 13 degrees of freedom, and a confidence level of 0,975 single-sided (equals 0,95 double-sided)

$$n^{\frac{1}{2}} = 2,16 \times \frac{0,6}{0,4}$$

n = 11

Second iteration, taking n = 11:

© ISO 2022 – All rights reserved
Documents
Document Sharing Hub
Full document details: BS EN ISO 10715:2022

recalculate for t = 2,23 for 10 degrees of freedom, and a confidence level of 0,975 single-sided (equals 0,95 double-sided)

$$n^{\frac{1}{2}} = 2{,}23 \times \frac{0{,}6}{0{,}4}$$

n = 11

EXAMPLE 2

Total sulfur determination:

Last measured concentration 20 mg/m^3 and the contract limit value 50 mg/m^3.

d = 30 mg/m^3 (difference between limit value from custody transfer contract and last measured value)

s = 10 mg/m^3 [standard deviation in spot sample results (in the past year)] t = 4,30 n - 1 taken as 2, level of certainty 95 % n = 2

Three samples are enough. Recalculation indicates that two samples are not enough.

7.3 Incremental sampling (continuous or composite)

7.3.1 General considerations

Flow rates and compositions can vary with time, so the interval between the sampling increments shall be carefully chosen so that the collected sample reflects these changes.

Incremental, or composite sampling is a sampling method that occurs over a specified time or batch quantity, thereby taking a representative composite sampling that catches a snapshot of the changes in the sample stream during that time frame or for the batch quantity. A typical system has a sample probe, a sampling pump system that is rated for the pipeline pressure of the installation, a sample grab mechanism, a timing mechanism that is tied to the flow rate device at the location, a regulated external instrument supply source or a regulator that takes the gas pressure in the pipeline and regulate that supply to the pressure needed for the sample pump, and a solenoid to activate the sample pump. The system can be direct mounted or installed with an external sample loop.

7.3.2 Intervals

If possible, flow-rate-proportional sampling shall be used for incremental-sampling systems. It is especially important to use flow-proportional sampling if both the flow rate and the composition change. For example, if the flow is stopped and the sampler continues to collect a sample, then the composite sample has some part of its gas collected when no gas flow was present. If the composition during this period is different from the average composition, the sample is not representative.

Time-proportional sampling may be used and provides representative samples only if the flow rate is steady over the sampling interval or if the composition is stable over the sampling interval.

There are several incremental samplers commercially available. Such units can be controlled by a timer or a flow proportional signal from the flow computer.

7.3.3 System considerations

A recommended incremental sampler is the displacement type which pumps a sample into a floating-piston cylinder at constant and at or slightly above line pressure, or a standard cylinder that builds to line pressure at the end of the pre-determined sample period. The sample line between the sampling device and the collection cylinder shall be of minimum length. Except for very dry, lean or low dew point

© ISO 2022 – All rights reserved

Documents
Document Sharing Hub
Full document details: BS EN ISO 10715:2022

gases, the sample line and sampler shall be heat-traced and insulated to avoid sample condensation. Samplers shall be designed so that they either

a) allow a continuous and uninterrupted flow of gas through them, or

b) completely self-purge before each sample, and thus pump a representative sample increment into the sample container.

7.3.4 Monitoring the filling process

The filling process shall be monitored by a local or remote indicator on a regular basis.

7.3.5 Cylinder tracking

All information important to the laboratory shall be on a label with the cylinder. Labels shall be securely attached to the sample cylinders, but shall not interfere with the utilization of the cylinder.

Information attached should preferably include:

— the cylinder number;

— the cylinder type;

— the location of sampling;

— all details necessary for identification of the pipe sampled;

— the date and time, or period, of sampling;

— the method of sampling;

— the actual destination of the cylinder;

— any need for maintenance on the cylinder (e.g. leakage);

— any information relevant to the analytical lab concerning the sample;

— the sample pressure, if a pressure gauge is not an integral part of the sampling cylinder;

— the line static pressure;

— the temperature of the gas stream;

— any field remarks.

7.3.6 Overpressure protection

If needed, safety valve or equivalent (pressure release device) shall be installed in order to protect system for overpressure in a failure situation (e.g. blocked pump outlet).

7.4 Online or direct sampling

7.4.1 General considerations

A third method of sampling is an online or direct sampling system. A sample conditioning system has to be located as close as possible to the sampling point, and if possible at the sampling point, downstream of the sampling probe to reduce the pressure for direct feed into the analyser (e.g. online GC). This conditioning system should integrate heating to offset JT effects, or due to ambient conditions that would cause liquid fallout due to the phase envelope for that gas and the cold temperature. It is recommended to also have additional regulation, filtration, phase separation, protection for the GC, and other critical features for a given location. For the system supplier to make a proper design, all

© ISO 2022 – All rights reserved
Documents
Document Sharing Hub
Full document details: BS EN ISO 10715:2022

information concerning the system purpose, all gas constituents including water, contaminants, liquid, phase envelope, etc. shall be made available.

Figure 2 and Figure 3 show examples of a direct-sampling system as described in this document; a number of other different configurations exist.

Additional information can be found in ISO/TR 14749[2] which concerns the determination of hydrocarbon components by online gas chromatograph and provides guidelines for selection, evaluation and factors impacting such system.

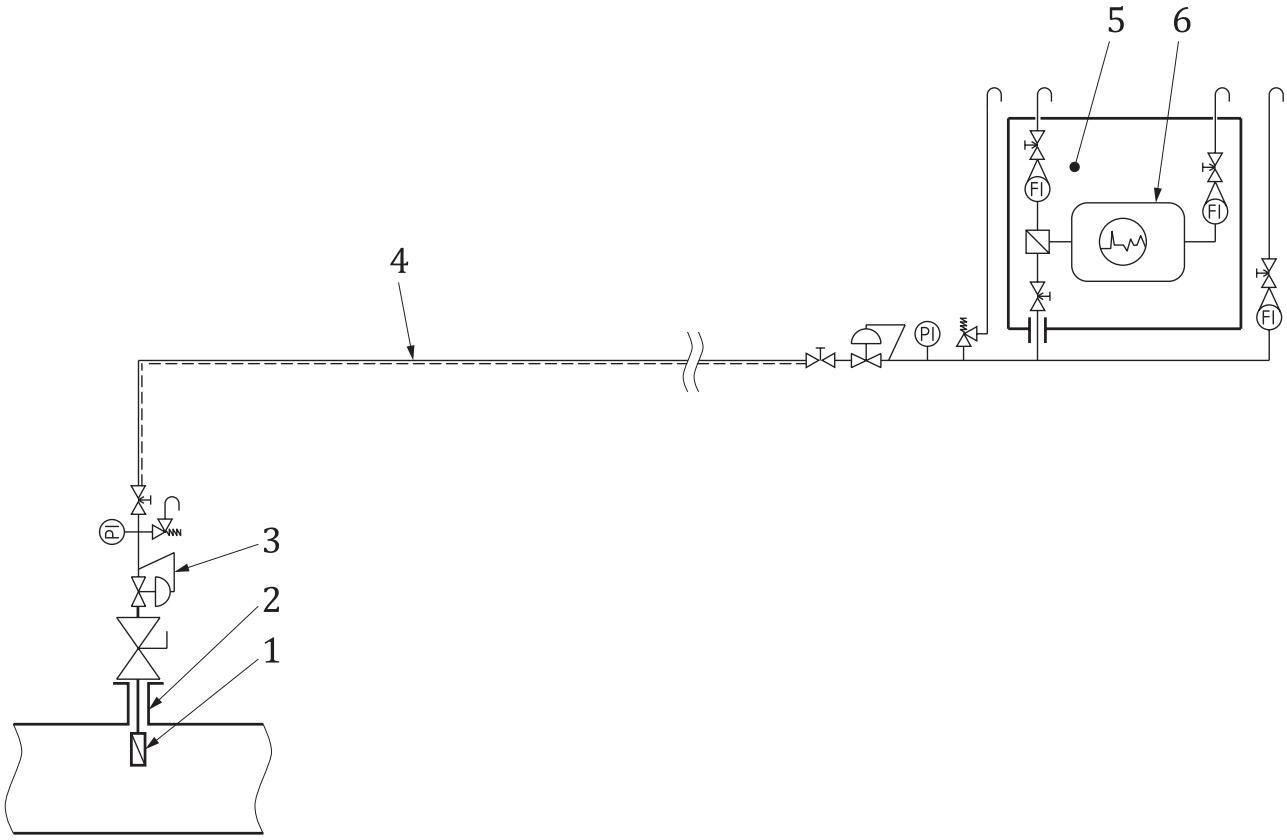

Key

1 sampling point
2 sampling place
3 sampling probe including membrane, filtration, pressure reducer and outlet manifold
4 electric heated sample line
5 analyser building
6 analyser

Figure 2 — Example of sampling with direct regulated probe

© ISO 2022 – All rights reserved

Documents
Document Sharing Hub
Full document details: BS EN ISO 10715:2022

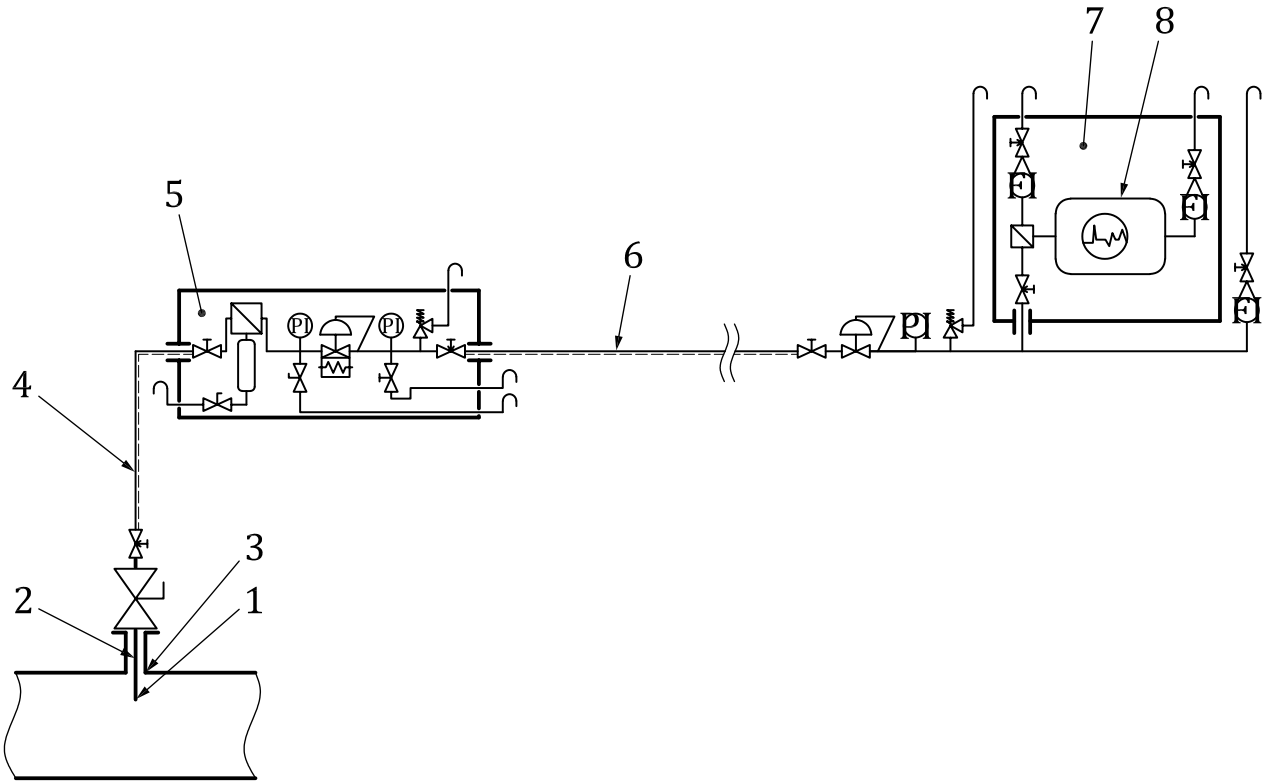

Key

1 sampling point
2 sampling probe without membrane and filtration
3 sampling place
4 sample line (to be as short as possible)
5 conditioning enclosure with filtration/separation and electric heated regulator
6 electric heated sample line
7 analyser building
8 analyser

Figure 3 — Example of sampling with non-regulated non-pressure reduced probe with conditioning enclosure

7.4.2 Automatic drainage

Automatic drainage involves the collection and periodic drainage of liquids from a trap in the sample system. This method is generally not acceptable as the intermittent vaporization of the accumulated liquid between drainage cycles can bias the analytical result.

7.4.3 Reducing the pressure

Depending on the analysis performed, the gas sample has to be carried out of the sampling point at full line pressure or reduced pressure.

Reducing pressure can be necessary for the safety or integrity of the downstream sampling equipment or analyser, as well as reducing the sample transfer time from the sample point.

© ISO 2022 – All rights reserved
Documents
Document Sharing Hub
Full document details: BS EN ISO 10715:2022

7.4.4 Inert-gas purging

The system shall be equipped with facilities for inert-gas purging. Purging of the sample system is required if, for some reason, condensation has taken place and also to remove air (oxygen) from the system prior to introducing process gas to avoid a hazardous condition.

7.4.5 Safety/pressure relief valve

This shall be an automatic pressure-relieving device, which opens in proportion to the increase in pressure over the opening set pressure and has a rapid full opening or pop action characteristic and is actuated by the static pressure upstream of the valve. The device automatically closes when the upstream pressure is reduced below the set pressure. These devices are considered to be tight shutoff when closed and are normally used in gas, vapour or liquid service.

A pressure relief valve shall be installed downstream of the pressure reducer, in order to protect the analyser from an uncontrolled increase in pressure should the reducer fail.

7.4.6 Heating of sample line

The sample line shall be maintained at a temperature of approximately 10 °C above dew points (i.e. water, hydrocarbon) to avoid condensation and creation of droplets or mist, and adsorption/desorption of compounds. This type of temperature stability might be achieved by self-regulated electric traced tubing. Further details are described in 10.10.

8 Sampling location

8.1 General

The probe should be located at least 5 pipe diameters downstream of any obstruction in the pipe. That may be 5 diameters downstream of the diameter of an orifice plate, elbow, valve, thermowell, etc.

It should be located in an active stream of the pipeline (not in a blow-down stack, not in a dead leg, etc,) in which a representative gas stream is flowing. In theory, in clean and dry natural gas streams, the probe can be installed from the top of the pipeline, the side and even in the bottom. Nevertheless, probes have to be preferentially installed vertically on the top of a horizontal pipeline or with at least, a maximum angle of +45° (the probe pointing downwards) to enable liquid droplets to drain into the stream and avoid ingress or accumulation of undesirable contaminants or particles.

It is important to note that these considerations are for clean, dry, single phase pipelines with a very small, occasional presence of liquid

The probe shall be located directly in the gas stream in such a way that problems of aerosols and dust are eliminated. The probe shall be externally equipped with adequate valving. This makes it possible to disconnect the sample line from the process line. The probe can be of a stationary or removable type depending on location and operating condition.

Sample probe in vertical pipes is acceptable if installed horizontal or inclined without any possibility to allow ingress or accumulation of undesirable material in the sampling system.

8.2 Sampling place

8.2.1 General

The location along the length or run of the pipeline where a sampling point is installed needs to be chosen carefully.

© ISO 2022 – All rights reserved

Documents
Document Sharing Hub
Full document details: BS EN ISO 10715:2022

For small diameter pipelines below 50 mm (e.g. biomethane), a probe may not be required. It can cause issues such as pressure drops, blocking the flow, etc. For small diameter pipelines a specific probe may be used to be in conformity with these types of conditions.

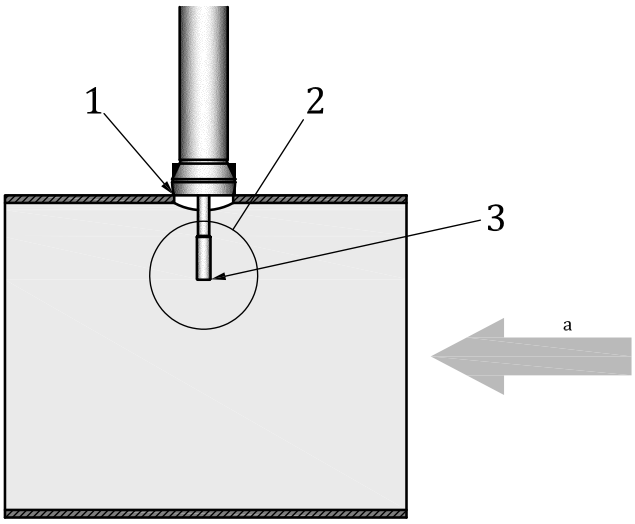

Key

1 sampling place

2 sampling position

3 sampling point

[a] Gas flow.

Figure 4 — Example of sampling place

8.2.2 Relevant gas

Critically a place shall be chosen such that gas passing that sample place is a gas to which the results of any subsequent analysis are applicable. The sample place shall always be chosen such that it is not in a dead end and that all gas to which the analysis results are applied actually flow past that sample place.

8.2.3 Undisturbed gas

The sample place shall be chosen such that it is in a location where the sample cannot be affected by flow disturbing elements. Flow disturbing elements are such things as control valves, elbows, tees, orifice plates, flow metering equipment, thermowells, processing equipment etc.

Such flow disturbing elements can cause momentary and local changes in the pressure and temperature of the gas. This in turn can cause the phase equilibrium of the gas to change by creating momentary liquid droplets etc. Further these flow disturbing elements usually creates momentary aerosols which are undesirable for sampling purposes.

8.2.4 Access

The sample place should be chosen where it can be readily accessed for operation and maintenance purposes. Personnel access ways/platforms to allow inspection and maintenance should be installed in a way to carry out the work safely on a routine basis.

Sometimes the conditions of 8.2.2 and 8.2.3 cannot be achieved by a single sample place for certain configurations/geometries of pipe runs in which case multiple sample places shall be used.

© ISO 2022 – All rights reserved
Documents
Document Sharing Hub
Full document details: BS EN ISO 10715:2022

8.3 Sampling position

The sample position is referenced to a cross-sectional area of the pipe at the sample place.

The sample position shall be within the cross-sectional area of the main pipe. Therefore, a sample probe is a pre-requisite of correct sampling.

There exists along the pipe wall a boundary layer in which the gas composition may not be representative of the gas flowing through the pipe. Additionally contamination products that are carried in the pipe such as compressor oils, valve lubricants, glycol, dust, etc gradually build up on the pipe wall over a period of time and sampling close to this contamination allows wall effects to become a significant factor in the quality of gas sampled.

In order to avoid the wall effects and ensure representative sample; while considering mechanical resistance, standard industry practice is to locate the sample probe within the centre one third. For pipes larger than DN 300 mm (12”) it is necessary to insert beyond a minimum 100 mm from the pipe wall, but it is not necessary to insert beyond 10 % to achieve a representative sample.

For more information about the mechanical considerations see Annex F. Consult the manufacturer on the definitive sample position within the pipe cross-section depending on the specific design of the probe.

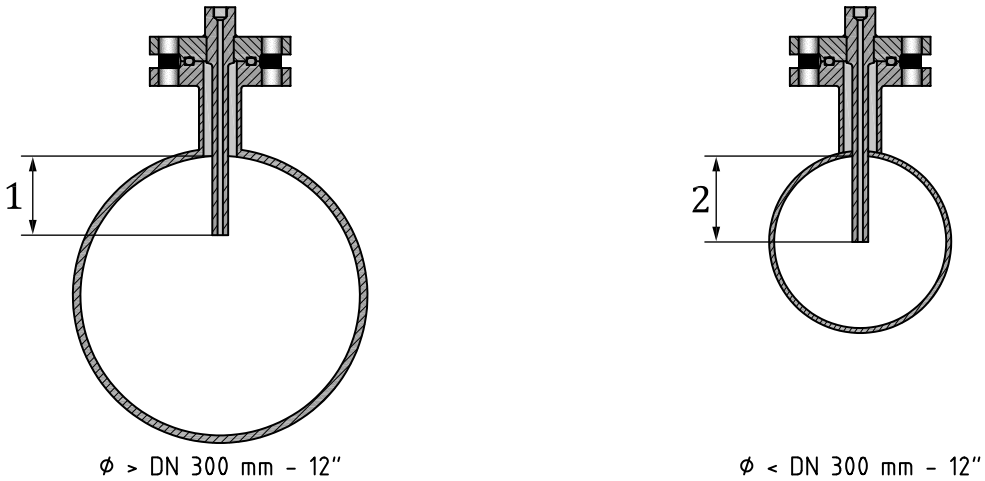

Key

1 over DN300 –12 ” - 100 mm insertion or 10 % of the size of the pipe

2 below DN300 –12” - Location in the centre one-third

Figure 5 — Sample position

8.4 Sampling point

The sampling point is a position in space (actually a position within the pipeline) that is established by a set of three-dimensional coordinates. The actual sample point is established by the sampling place and sampling position but is further established by the centre of the inlet at the tip or opening on the sampling probe where sampled gas enters the probe.

NOTE 1 The design of the sampling probe and the dynamics of how it interacts with fast flowing gas when installed can alter the physical state of the gas at the sampling point.

The term sampling point is used and it should not be confused with the sample place or sample position.

© ISO 2022 – All rights reserved

Documents
Document Sharing Hub
Full document details: BS EN ISO 10715:2022

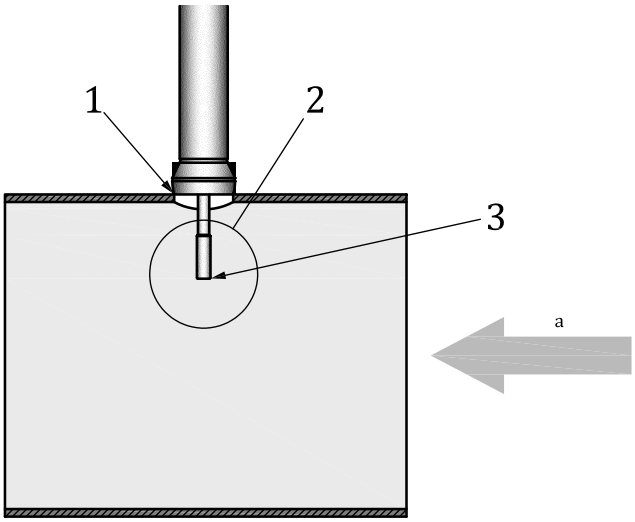

Key

1 sampling place

2 sampling position

3 sampling point

a Gas flow.

Figure 6 — Example sample point

9 Ideal implementation of gas sampling

9.1 General

To ensure that a representative sample is used for measurement and attribution, careful consideration needs to be given to the

— location of the sampling point,

— process and flow conditions at the sampling point,

— methods of sample collection, conditioning, transportation and storage,

— materials of the sampling system,

— surfaces and/or contaminants that the sample contacts,

— temperature of the sampling system,

— cleanliness, servicing and maintenance of the sampling system, and

— attribution of the information gained from the sample to the mass.

The main technical issues are listed in the following subclauses:

9.2 Gas sorption

9.2.1 General

A number of the constituents of natural gas are highly susceptible to gas sorption effects with materials normally thought of as inert. The surfaces of the materials can become active because of a build-up of contaminants. It is therefore necessary to choose very carefully the materials and the condition of the

© ISO 2022 – All rights reserved
Documents
Document Sharing Hub
Full document details: BS EN ISO 10715:2022