BS EN ISO 1101:2017

BSI Standards Publication

Geometrical product specifications (GPS) — Geometrical tolerancing — Tolerances of form, orientation, location and run-out (ISO 1101:2017)

Documents
Document Sharing Hub

Full document details: BS EN ISO 1101:2017

National foreword

This British Standard is the UK implementation of EN ISO 1101:2017. It supersedes BS EN ISO 1101:2013 which is withdrawn.

The UK participation in its preparation was entrusted to Technical Committee TDW/4, Technical Product Realization.

A list of organizations represented on this committee can be obtained on request to its secretary.

This publication does not purport to include all the necessary provisions of a contract. Users are responsible for its correct application.

© The British Standards Institution 2017.
Published by BSI Standards Limited 2017

ISBN 978 0 580 87127 6

ICS 01.100.20; 17.040.10; 17.040.40

Compliance with a British Standard cannot confer immunity from legal obligations.

This British Standard was published under the authority of the Standards Policy and Strategy Committee on 28 February 2017.

Amendments/corrigenda issued since publication

Date	Text affected

Documents
Document Sharing Hub

Full document details: BS EN ISO 1101:2017

EUROPEAN STANDARD

NORME EUROPÉENNE

EUROPÄISCHE NORM

EN ISO 1101

February 2017

ICS 17.040.40

Supersedes EN ISO 1101:2013

English Version

Geometrical product specifications (GPS) - Geometrical tolerancing - Tolerances of form, orientation, location and run-out (ISO 1101:2017)

Spécification géométrique des produits (GPS) - Tolérancement géométrique - Tolérancement de forme, orientation, position et battement (ISO 1101:2017)

Geometrische Produktspezifikation (GPS) - Geometrische Tolerierung - Tolerierung von Form, Richtung, Ort und Lauf (ISO 1101:2017)

This European Standard was approved by CEN on 14 December 2016.

CEN members are bound to comply with the CEN/CENELEC Internal Regulations which stipulate the conditions for giving this European Standard the status of a national standard without any alteration. Up-to-date lists and bibliographical references concerning such national standards may be obtained on application to the CEN-CENELEC Management Centre or to any CEN member.

This European Standard exists in three official versions (English, French, German). A version in any other language made by translation under the responsibility of a CEN member into its own language and notified to the CEN-CENELEC Management Centre has the same status as the official versions.

CEN members are the national standards bodies of Austria, Belgium, Bulgaria, Croatia, Cyprus, Czech Republic, Denmark, Estonia, Finland, Former Yugoslav Republic of Macedonia, France, Germany, Greece, Hungary, Iceland, Ireland, Italy, Latvia, Lithuania, Luxembourg, Malta, Netherlands, Norway, Poland, Portugal, Romania, Serbia, Slovakia, Slovenia, Spain, Sweden, Switzerland, Turkey and United Kingdom.

EUROPEAN COMMITTEE FOR STANDARDIZATION
COMITÉ EUROPÉEN DE NORMALISATION
EUROPÄISCHES KOMITEE FÜR NORMUNG

CEN-CENELEC Management Centre: Avenue Marnix 17, B-1000 Brussels

© 2017 CEN All rights of exploitation in any form and by any means reserved worldwide for CEN national Members.

Ref. No. EN ISO 1101:2017 E

Documents
Document Sharing Hub

Full document details: BS EN ISO 1101:2017

European foreword

This document (EN ISO 1101-1:2017) has been prepared by Technical Committee ISO/TC 213 "Dimensional and geometrical product specifications and verification" in collaboration with Technical Committee CEN/TC 290 "Dimensional and geometrical product specification and verification" the secretariat of which is held by AFNOR.

This European Standard shall be given the status of a national standard, either by publication of an identical text or by endorsement, at the latest by August 2017 and conflicting national standards shall be withdrawn at the latest by August 2017.

Attention is drawn to the possibility that some of the elements of this document may be the subject of patent rights. CEN [and/or CENELEC] shall not be held responsible for identifying any or all such patent rights.

This document supersedes EN ISO 1101:2013.

According to the CEN-CENELEC Internal Regulations, the national standards organizations of the following countries are bound to implement this European Standard: Austria, Belgium, Bulgaria, Croatia, Cyprus, Czech Republic, Denmark, Estonia, Finland, Former Yugoslav Republic of Macedonia, France, Germany, Greece, Hungary, Iceland, Ireland, Italy, Latvia, Lithuania, Luxembourg, Malta, Netherlands, Norway, Poland, Portugal, Romania, Serbia, Slovakia, Slovenia, Spain, Sweden, Switzerland, Turkey and the United Kingdom.

Endorsement notice

The text of ISO 1101:2017 has been approved by CEN as EN ISO 1101:2017 without any modification.

Documents
Document Sharing Hub

Full document details: BS EN ISO 1101:2017

Contents

Page

Foreword ... **vi**
Introduction ... **vii**
1 Scope ... **1**
2 Normative references ... **1**
3 Terms and definitions ... **2**
4 Basic concepts ... **4**
5 Symbols ... **6**
6 Toleranced features ... **9**
7 Tolerance zones ... **12**
7.1 Tolerance zone defaults ... 12
7.2 Tolerance zones of variable width ... 13
7.3 Orientation of tolerance zones for derived features ... 13
7.4 Cylindrical and spherical tolerance zones ... 13
8 Geometrical specification indication ... **14**
8.1 General ... 14
8.2 Tolerance indicator ... 14
8.2.1 Symbol section ... 14
8.2.2 Zone, feature and characteristic section ... 14
8.2.3 Datum section ... 35
8.3 Plane and feature indicators ... 35
8.4 Indications adjacent to the tolerance indicator ... 36
8.4.1 General ... 36
8.4.2 Toleranced feature identifiers ... 36
8.4.3 Patterns ... 38
8.4.4 Adjacent indication sequence ... 38
8.5 Stacked tolerance indications ... 38
8.6 Indication of drawing defaults ... 38
9 Supplementary indications ... **39**
9.1 Indications of a compound or restricted toleranced feature ... 39
9.1.1 General ... 39
9.1.2 All around and all over — Continuous, closed tolerance feature ... 39
9.1.3 Restricted area toleranced feature ... 42
9.1.4 Continuous, non-closed toleranced feature ... 44
9.2 Moveable assemblies ... 45
10 Theoretically exact dimensions (TED) ... **46**
11 Restrictive specifications ... **46**
12 Projected toleranced feature ... **48**
13 Intersection planes ... **52**
13.1 Role of intersection planes ... 52
13.2 Features to be used for establishing a family of intersection planes ... 52
13.3 Graphical language ... 52
13.4 Rules ... 52
14 Orientation planes ... **55**
14.1 Role of orientation planes ... 55
14.2 Features to be used for establishing orientation planes ... 55
14.3 Graphical language ... 55
14.4 Rules ... 55
15 Direction feature ... **57**

AVA Documents
Document Sharing Hub

© ISO 2017 – All rights reserved

Full document details: BS EN ISO 1101:2017

15.1 Role of direction features ... 57
15.2 Features to be used for establishing direction features ... 59
15.3 Graphical language ... 59
15.4 Rules ... 59

16 Collection plane ... 60
16.1 Role of collection planes ... 60
16.2 Features to be used for establishing collection planes ... 61
16.3 Graphical language ... 61
16.4 Rules ... 61

17 Definitions of geometrical specifications ... 61
17.1 General ... 61
17.2 Straightness specification ... 61
17.3 Flatness specification ... 64
17.4 Roundness specification ... 64
17.5 Cylindricity specification ... 66
17.6 Line profile specification not related to a datum ... 67
17.7 Line profile specification related to a datum system ... 68
17.8 Surface profile specification not related to a datum ... 70
17.9 Surface profile specification related to a datum ... 70
17.10 Parallelism specification ... 71
17.10.1 General ... 71
17.10.2 Parallelism specification of a median line related to a datum system ... 72
17.10.3 Parallelism specification of a median line related to a datum straight line ... 75
17.10.4 Parallelism specification of a median line related to a datum plane ... 76
17.10.5 Parallelism specification of a set of lines in a surface related to a datum plane ... 77
17.10.6 Parallelism specification of a planar surface related to a datum straight line ... 77
17.10.7 Parallelism specification of a planar surface related to a datum plane ... 78
17.11 Perpendicularity specification ... 79
17.11.1 General ... 79
17.11.2 Perpendicularity specification of a median line related to a datum straight line ... 79
17.11.3 Perpendicularity specification of a median line related to a datum system ... 80
17.11.4 Perpendicularity specification of a median line related to a datum plane ... 82
17.11.5 Perpendicularity specification of a planar surface related to a datum straight line ... 83
17.11.6 Perpendicularity specification of a planar surface related to a datum plane ... 83
17.12 Angularity specification ... 84
17.12.1 General ... 84
17.12.2 Angularity specification of a median line related to a datum straight line ... 84
17.12.3 Angularity specification for a median line related to a datum system ... 86
17.12.4 Angularity specification for a planar surface related to a datum straight line ... 87
17.12.5 Angularity specification for a planar surface related to a datum plane ... 88
17.13 Position specification ... 89
17.13.1 General ... 89
17.13.2 Position specification of a derived point ... 89
17.13.3 Position specification of a median line ... 90
17.13.4 Position specification of a median plane ... 94
17.13.5 Position specification of a planar surface ... 96
17.14 Concentricity and coaxiality specification ... 97
17.14.1 General ... 97
17.14.2 Concentricity specification of a point ... 97
17.14.3 Coaxiality specification of an axis ... 98
17.15 Symmetry specification ... 100
17.15.1 General ... 100
17.15.2 Symmetry specification of a median plane ... 100
17.16 Circular run-out specification ... 101
17.16.1 General ... 101
17.16.2 Circular run-out specification — Radial ... 101

AVA Documents
Document Sharing Hub

© ISO 2017 – All rights reserved

Full document details: BS EN ISO 1101:2017

17.16.3 Circular run-out specification — Axial ... 103
17.16.4 Circular runout in any direction ... 104
17.16.5 Circular run-out specification in a specified direction ... 106
17.17 Total run-out specification ... 107
17.17.1 General ... 107
17.17.2 Total run-out specification — Radial ... 107
17.17.3 Total run-out specification – Axial ... 108

Annex A (informative) **Deprecated and former practices** ... **110**

Annex B (informative) **Explicit and implicit rules for geometrical tolerance zones** ... **119**

Annex C (informative) **Filters** ... **125**

Annex D (normative) **ISO special specification elements for form** ... **128**

Annex E (informative) **Filter details** ... **129**

Annex F (normative) **Relations and dimensions of graphical symbols** ... **142**

Annex G (informative) **Relation to the GPS matrix model** ... **144**

Bibliography ... **145**

© ISO 2017 – All rights reserved

Documents
Document Sharing Hub
Full document details: BS EN ISO 1101:2017

Foreword

ISO (the International Organization for Standardization) is a worldwide federation of national standards bodies (ISO member bodies). The work of preparing International Standards is normally carried out through ISO technical committees. Each member body interested in a subject for which a technical committee has been established has the right to be represented on that committee. International organizations, governmental and non-governmental, in liaison with ISO, also take part in the work. ISO collaborates closely with the International Electrotechnical Commission (IEC) on all matters of electrotechnical standardization.

The procedures used to develop this document and those intended for its further maintenance are described in the ISO/IEC Directives, Part 1. In particular the different approval criteria needed for the different types of ISO documents should be noted. This document was drafted in accordance with the editorial rules of the ISO/IEC Directives, Part 2 (see www.iso.org/directives).

Attention is drawn to the possibility that some of the elements of this document may be the subject of patent rights. ISO shall not be held responsible for identifying any or all such patent rights. Details of any patent rights identified during the development of the document will be in the Introduction and/or on the ISO list of patent declarations received (see www.iso.org/patents).

Any trade name used in this document is information given for the convenience of users and does not constitute an endorsement.

For an explanation on the meaning of ISO specific terms and expressions related to conformity assessment, as well as information about ISO's adherence to the World Trade Organization (WTO) principles in the Technical Barriers to Trade (TBT) see the following URL: www.iso.org/iso/foreword.html.

This document was prepared by Technical Committee ISO/TC 213, *Dimensional and geometrical product specifications and verifications*.

This fourth edition cancels and replaces the third edition (ISO 1101:2012), which has been technically revised.

It also incorporates the Technical Corrigendum ISO 1101:2012/Cor.1:2013.

The main changes are as follows.

— Tools have been added to specify the filtering of the toleranced feature and a line type has been designated for its illustration.

— Tools have been added to tolerance associated features.

— Tools have been added to specify form characteristics by specifying the reference feature association and the specified parameter.

— Tools have been added to specify the constraints to the tolerance zone.

— The rules for specifications using "all around" or "all over" modifiers have been clarified.

— The direction of the tolerance zone in the case of roundness tolerances for revolute surfaces that are neither cylindrical nor spherical, e.g. cones shall now always be indicated to avoid an exception to the general rule that specifications for integral features apply perpendicular to the surface.

— The "from-to" symbol has been retired and replaced by the "between" symbol.

© ISO 2017 – All rights reserved
Documents
Document Sharing Hub
Full document details: BS EN ISO 1101:2017

Introduction

This document is a geometrical product specification (GPS) standard and is to be regarded as a general GPS standard (see ISO 14638). It influences chain links A, B and C of the chain of standards on form, orientation, location and run out.

The ISO GPS Masterplan given in ISO 14638 gives an overview of the ISO GPS system of which this document is a part. The fundamental rules of ISO GPS given in ISO 8015 apply to this document. The default decision rules given in ISO 14253-1 apply to specifications made in accordance with this document, unless otherwise stated.

For more detailed information on the relation of this document to the GPS matrix model, see Annex G.

This document represents the initial basis and describes the required fundamentals for geometrical tolerancing. Nevertheless, it is advisable to consult the separate standards referenced in Clause 2 and in Tables 3 and 4 for more detailed information.

For the presentation of lettering (proportions and dimensions), see ISO 3098-2.

All figures in this document for the 2D drawing indications have been drawn in first-angle projection with dimensions and tolerances in millimetres. It should be understood that third-angle projection and other units of measurement could have been used equally well without prejudice to the principles established. For all figures giving specification examples in 3D, the dimensions and tolerances are the same as for the similar figures shown in 2D.

The figures in this document represent either 2D drawing views or 3D axonometric views on 2D drawings and are intended to illustrate how a specification can be fully indicated with visible annotation. For possibilities of illustrating a specification where elements of the specification may be available through a query function or other interrogation of information on the 3D CAD model and rules for attaching specifications to 3D CAD models, see ISO 16792.

The figures in this document illustrate the text and are not intended to reflect an actual application. Consequently, the figures are not fully dimensioned and specified, showing only the relevant general principles. Neither are the figures intended to imply a particular display requirement in terms of whether hidden detail, tangent lines or other annotations are shown or not shown. Many figures have lines or details removed for clarity, or added or extended to assist with the illustration of the text. See Table 1 for the line types used in definition figures.

In order for a GPS specification to be unambiguous, the partition defining the boundary of the toleranced feature, as well as the filtering, has to be well defined. Currently, the detailed rules for partitioning and the default for filtering are not defined in GPS standards.

For a definitive presentation (proportions and dimensions) of the symbolization for geometrical tolerancing, see ISO 7083 and Annex F.

Annex A has been provided for information only. It presents previous drawing indications that have been omitted here and are no longer used.

For the purposes of this document, the terms “axis” and “median plane” are used for derived features of perfect form, and the terms “median line” and “median surface” for derived features of imperfect form. Furthermore, the following line types have been used in the explanatory illustrations, i.e. those representing non-technical drawings for which the rules of ISO 128 (all parts) apply.

© ISO 2017 – All rights reserved

Documents
Document Sharing Hub
Full document details: BS EN ISO 1101:2017

Table 1

Feature level	Feature type	Details	Line type	
			Visible	Behind plane/surface
Nominal feature	integral feature	point line/axis surface/plane	wide continuous	narrow dashed
	derived feature	point line/axis surface/plane	narrow long dashed dotted	narrow dashed dotted
Real feature	integral feature	surface	wide freehand continuous	narrow freehand dashed
Extracted feature	integral feature	point line surface	wide short dashed	narrow short dashed
	derived feature	point line surface	wide dotted	narrow dotted
Filtered feature	integral feature	line surface	continuous narrow	continuous narrow
Associated feature	integral feature	point straight line plane	wide doubled-dashed double-dotted	narrow double-dashed double-dotted
	derived feature	point straight line (axis) plane	narrow long dashed double-dotted	wide dashed double-dotted
	datum	point line/axis surface/plane	wide long dashed double-short dashed	narrow long dashed double-short dashed
Tolerance zone limits, tolerance planes		line surface	continuous narrow	narrow dashed
Section, illustration plane, drawing plane, aid plane		line surface	narrow long dashed short dashed	narrow dashed short dashed
Extension, dimension, leader and reference lines		line	continuous narrow	narrow dashed

© ISO 2017 – All rights reserved
Documents
Document Sharing Hub
Full document details: BS EN ISO 1101:2017

INTERNATIONAL STANDARD ISO 1101:2017(E)

Geometrical product specifications (GPS) — Geometrical tolerancing — Tolerances of form, orientation, location and run-out

IMPORTANT — The illustrations included in this document are intended to illustrate the text and/or to provide examples of the related technical drawing specification; these illustrations are not fully dimensioned and toleranced, showing only the relevant general principles. In particular, many illustrations do not contain filter specifications. As a consequence, the illustrations are not a representation of a complete workpiece, and are not of a quality that is required for use in industry (in terms of full conformity with the standards prepared by ISO/TC 10 and ISO/TC 213), and as such are not suitable for projection for teaching purposes.

1 Scope

This document defines the symbol language for geometrical specification of workpieces and the rules for its interpretation.

It provides the foundation for geometrical specification.

The illustrations in this document are intended to illustrate how a specification can be fully indicated with visible annotation (including e.g. TEDs).

NOTE 1 Other International Standards referenced in Clause 2 and in Tables 3 and 4 provide more detailed information on geometrical tolerancing.

NOTE 2 This document gives rules for explicit and direct indications of geometrical specifications. Alternatively, the same specifications can be indicated indirectly in accordance with ISO 16792 by attaching them to a 3D CAD model. In this case, it is possible that some elements of the specification are available through a query function or other interrogation of information on the model instead of being indicated using visible annotation.

2 Normative references

The following documents are referred to in the text in such a way that some or all of their content constitutes requirements of this document. For dated references, only the edition cited applies. For undated references, the latest edition of the referenced document (including any amendments) applies.

ISO 128-24:1999, *Technical drawings — General principles of presentation — Part 24: Lines on mechanical engineering drawings*

ISO 1660, *Technical drawings — Dimensioning and tolerancing of profiles*

ISO 2692:2014, *Geometrical product specifications (GPS) — Geometrical tolerancing — Maximum material requirement (MMR), least material requirement (LMR) and reciprocity requirement (RPR)*

ISO 5458, *Geometrical Product Specifications (GPS) — Geometrical tolerancing — Positional tolerancing*

ISO 5459, *Geometrical product specifications (GPS) — Geometrical tolerancing — Datums and datum systems*

ISO 8015:2011, *Geometrical product specifications (GPS) — Fundamentals — Concepts, principles and rules*

ISO 10579:2010, *Geometrical product specifications (GPS) — Dimensioning and tolerancing — Non-rigid parts*

ISO 13715, *Technical drawings — Edges of undefined shape — Vocabulary and indications*

© ISO 2017 – All rights reserved

Documents
Document Sharing Hub
Full document details: BS EN ISO 1101:2017

ISO 16610 (all parts), *Geometrical product specifications (GPS) — Filtration*

ISO 17450-1:2011, *Geometrical product specifications (GPS) — General concepts — Part 1: Model for geometrical specification and verification*

ISO 17450-2, *Geometrical product specifications (GPS) — General concepts — Part 2: Basic tenets, specifications, operators, uncertainties and ambiguities*

ISO 17450-3, *Geometrical product specifications (GPS) — General concepts — Part 3: Toleranced features*

ISO 22432, *Geometrical product specifications (GPS) — Features utilized in specification and verification*

ISO 25378:2011, *Geometrical product specifications (GPS) — Characteristics and conditions — definitions*

3 Terms and definitions

For the purpose of this document, the terms and definitions given in ISO 8015, the ISO 16610 series, ISO 17450-1, ISO 17450-2, ISO 17450-3, ISO 22432, ISO 25378 and the following apply.

ISO and IEC maintain terminological databases for use in standardization at the following addresses:

— IEC Electropedia: available at http://www.electropedia.org/

— ISO Online browsing platform: available at https://www.iso.org/obp/

3.1
tolerance zone
space limited by and including one or two ideal lines or surfaces, and characterized by one or more linear dimensions, called a tolerance

Note 1 to entry: See also 4.4.

3.2
intersection plane
plane, established from an extracted feature of the workpiece, identifying a line on an extracted surface (integral or median) or a point on an extracted line

Note 1 to entry: The use of intersection planes makes it possible to define toleranced features independent of the view.

Note 2 to entry: For areal surface texture, the intersection plane can be used to define the orientation of the evaluation area, see ISO 25178-1.

3.3
orientation plane
plane, established from an extracted feature of the workpiece, identifying the orientation of the tolerance zone

Note 1 to entry: The use of an orientation plane makes it possible to define the direction of the planes or cylinder that limit the tolerance zone independent of the TEDs (for location) or of the datum (for orientation). The orientation plane is only used for this purpose when the toleranced feature is a median feature (centre point, median straight line) and the tolerance zone is defined by two parallel straight lines or two parallel planes or, for a centre point, a cylinder.

Note 2 to entry: The use of an orientation plane also makes it possible to define the orientation of a rectangular restricted area.

© ISO 2017 – All rights reserved
Documents
Document Sharing Hub
Full document details: BS EN ISO 1101:2017

3.4
direction feature
ideal feature, established from an extracted feature of the workpiece, identifying the direction of local deviations

Note 1 to entry: The direction feature can be a plane, a cylinder or a cone.

Note 2 to entry: For a line in a surface, the use of a direction feature makes it possible to change the direction of the width of the tolerance zone.

Note 3 to entry: The direction feature is used when the tolerance value applies in a specified direction instead of normal to the specified geometry.

Note 4 to entry: The direction feature is constructed from the datum indicated in the second compartment of the direction feature indicator. The geometry of the direction feature depends on the geometry of the toleranced feature.

3.5
compound continuous feature
single feature composed of more than one single feature joined together without gaps

Note 1 to entry: A compound continuous feature can be closed or not.

Note 2 to entry: A non-closed compound continuous feature can be defined using the "between" symbol (see 9.1.4) and, if applicable, the UF modifier.

Note 3 to entry: A closed compound continuous feature can be defined using the "all around" symbol (see 9.1.2) and the UF modifier. In this case, it is a set of single features whose intersection with any plane parallel to a collection plane is a line or a point.

Note 4 to entry: A closed compound continuous feature can be defined using the "all over" symbol (see 9.1.2) and the UF modifier.

3.6
collection plane
plane, established from a feature on the workpiece, defining a closed compound continuous feature

Note 1 to entry: The collection plane is always used when the "all around" symbol is applied.

3.7
theoretically exact dimension
TED
linear or angular dimension used in GPS operations to define theoretically exact geometry, extents, locations and orientations of features

Note 1 to entry: For the purpose of this document, the term "theoretically exact dimension" has been abbreviated as TED.

Note 2 to entry: A TED can be used to define the following:

— the nominal shape and dimensions of features;

— the definition of theoretically exact features (TEF);

— the location and dimensions of portions of features, including restricted toleranced features;

— the length of projected toleranced features;

— the relative location and orientation of two or more tolerance zones;

— the relative location and orientation of datum targets, including moveable datum targets;

— the location and orientation of tolerance zones relative to datums and datum systems;

— the direction of the width of tolerance zones.

© ISO 2017 – All rights reserved

Documents
Document Sharing Hub
Full document details: BS EN ISO 1101:2017

Note 3 to entry: A TED can be explicit or implicit. When indicated, an explicit TED is indicated by a rectangular frame including a value and sometimes an associated symbol, e.g. ø or R. On 3D models, explicit TEDs may be available by queries.

Note 4 to entry: An implicit TED is not indicated. An implicit TED is one of the following: 0 mm, 0°, 90°, 180°, 270° and the angular distance between equally spaced features on a complete circle.

Note 5 to entry: TEDs are not affected by individual or general specifications.

3.8
theoretically exact feature
TEF
nominal feature with ideal shape, size, orientation and location, as applicable

Note 1 to entry: A theoretically exact feature (TEF) can have any shape and can be defined by explicitly indicated theoretically exact dimensions (TEDs) or implicitly defined in CAD data.

Note 2 to entry: The theoretically exact location and orientation, if applicable, is relative to the indicated datum system for the specification of the corresponding actual feature.

Note 3 to entry: See also ISO 25378.

EXAMPLE 1 The spherical surface shown in Figure 110 is a theoretically exact feature, with a defined spherical radius and a defined location and orientation relative to datum A.

EXAMPLE 2 A virtual condition, e.g. a maximum material virtual condition (MMVC) according to ISO 2692 is a theoretically exact feature.

3.9
united feature
compound integral feature which may or may not be continuous, considered as a single feature

Note 1 to entry: A united feature can have a derived feature.

Note 2 to entry: The definition of a united feature is intentionally very broad to avoid excluding any useful applications. However, it is not intended that a united feature can be used to define something that is by nature several separate features. For example, building a united feature from two parallel, non-coaxial cylindrical features, or two parallel, non-coaxial rectangular tubes (each built from two perpendicular pairs of parallel planes) is not an intended use.

EXAMPLE 1 A cylindrical feature defined from a set of arc features, such as the outside diameter of a spline, is an intended use of a united feature, see Figure 48.

EXAMPLE 2 Two complete coaxial cylinders, which do not have the same nominal diameter, cannot be considered as a united feature.

4 Basic concepts

4.1 Geometrical tolerances shall be specified in accordance with functional requirements. Manufacturing and inspection requirements can also influence geometrical tolerancing.

NOTE Indicating geometrical tolerances does not necessarily imply the use of any particular method of production, measurement or gauging.

4.2 A geometrical tolerance applied to a feature defines the tolerance zone around the reference feature within which the toleranced feature shall be contained.

NOTE 1 In some cases, i.e. when using the characteristic parameter modifiers introduced in this document, see Figure 13, geometrical specifications can define characteristics instead of zones.

NOTE 2 All dimensions given in the figures in this document are in millimetres.

© ISO 2017 – All rights reserved
Documents
Document Sharing Hub
Full document details: BS EN ISO 1101:2017

4.3 A feature is a specific portion of the workpiece, such as a point, a line or a surface; these features can be integral features (e.g. the external surface of a cylinder) or derived features (e.g. a median line or median surface). See ISO 17450-1.

4.4 Depending on the characteristic to be specified and the manner in which it is specified, the tolerance zone is one of the following:

— the space within a circle;

— the space between two concentric circles;

— the space between two parallel circles on a conical surface;

— the space between two parallel circles of the same diameter;

— the space between two equidistant complex lines or two parallel straight lines;

— the space between two non-equidistant complex lines or two non-parallel straight lines;

— the space within a cylinder;

— the space between two coaxial cylinders;

— the space within a cone;

— the space within a single complex surface;

— the space between two equidistant complex surfaces or two parallel planes;

— the space within a sphere;

— the space between two non-equidistant complex surfaces or two non-parallel planes.

NOTE The tolerance zone may be defined in the CAD model.

4.5 Unless a more restrictive indication is required, for example by an explanatory note, the toleranced feature may be of any form, orientation and/or location within this tolerance zone.

4.6 The specification applies to the whole extent of the considered feature unless otherwise specified. See Clauses 11 and 12.

Currently, the detailed rules for partitioning (defining the boundary of the toleranced feature) are not elaborated in GPS standards. This leads to an ambiguity of specification.

4.7 Geometrical specifications which are assigned to features related to a datum(s) do not limit the form deviations of the datum feature(s) itself.

4.8 For functional reasons, one or more characteristics can be specified to define the geometrical deviations of a feature. Certain types of specifications, which limit the geometrical deviations of a toleranced feature, can also limit other types of deviations for the same feature.

— A location specification controls location deviation, orientation deviation and form deviation of the toleranced feature.

— An orientation specification controls orientation and form deviations of the toleranced feature but cannot control its location.

— A form specification controls only form deviations of the toleranced feature.

© ISO 2017 – All rights reserved

Documents
Document Sharing Hub
Full document details: BS EN ISO 1101:2017

5 Symbols

The symbols used in symbol section of the tolerance indicator are defined in Table 2.

The symbols used in zone, feature and characteristic section of the tolerance indicator are defined in Table 3. Annex C defines the meaning of the filtration symbols and Annex D defines the meaning of association symbol and parameter (of characteristic) symbols.

Some symbols defined in other standards and used in ISO 1101 are presented in Table 4 for information.

For filter symbols, see Table C.1; for nesting indices, see Table C.2; for association symbols, see Table D.1; and for parameter symbols, see Table D.2.

NOTE For symbol proportions, see ISO 7083 and Annex F.

Table 2 — Symbols for geometrical characteristics

Specification	Characteristics	Symbol	Datum needed	Subclause
Form	Straightness	—	no	17.2
	Flatness	▱	no	17.3
	Roundness	○	no	17.4
	Cylindricity	⌭	no	17.5
	Line profile	⌒ [a]	no	17.6
	Surface profile	⌓ [a]	no	17.8
Orientation	Parallelism	//	yes	17.10
	Perpendicularity	⊥	yes	17.11
	Angularity	∠	yes	17.12
	Line profile	⌒ [a]	yes	
	Surface profile	⌓ [a]	yes	
Location	Position	⌖	no	[b]
			yes	17.13
	Concentricity (for centre points)	◎	yes	17.14
	Coaxiality (for median lines)	◎	yes	17.14
	Symmetry	⌯	yes	17.15
	Line profile	⌒ [a]	yes	17.7
	Surface profile	⌓ [a]	yes	17.9
Run-out	Circular run-out	↗	yes	17.16
	Total run-out	⌰	yes	17.17

NOTE 1 The line profile specification symbol was called “profile any line” in former versions of this document.

NOTE 2 The surface profile specification symbol was called “profile any surface” in former versions of this document.

[a] See also ISO 1660.

[b] See also ISO 5458.

© ISO 2017 – All rights reserved
Documents
Document Sharing Hub
Full document details: BS EN ISO 1101:2017

Table 3 — Additional symbols defined in this document

Description	Symbol	Clause
Combination specification elements		
Combined zone	CZ[a c]	8.2.2.1.2
Separate zones	SZ[a]	8.2.2.1.2, ISO 2692 and ISO 5458
Unequal zone specification elements		
Specified tolerance zone offset	UZ[a]	8.2.2.1.3
Constraint specification elements		
Unspecified linear tolerance zone offset (offset zone)	OZ	8.2.2.1.4.1
Unspecified angular tolerance zone offset (variable angle)	VA	8.2.2.1.4.2
Associated toleranced feature specification elements		
Minimax (Chebyshev) feature	Ⓒ	8.2.2.2.2
Least squares (Gaussian) feature	Ⓖ	8.2.2.2.2
Minimum circumscribed feature	Ⓝ	8.2.2.2.2
Tangent feature	Ⓣ	8.2.2.2.2
Maximum inscribed feature	Ⓧ	8.2.2.2.2
Derived toleranced feature specification elements		
Derived feature	Ⓐ	Clause 6 and 8.2.2.2.3
Projected tolerance zone	Ⓟ	Clause 12 and 8.2.2.2.3
Reference feature association specification elements		
Minimax (Chebyshev) feature without constraint	C	8.2.2.3.1
Minimax (Chebyshev) feature with external material constraint	CE	8.2.2.3.1
Minimax (Chebyshev) feature with internal material constraint	CI	8.2.2.3.1
Least squares (Gaussian) feature without constraint	G	8.2.2.3.1
Least squares (Gaussian) feature with external material constraint	GE	8.2.2.3.1
Least squares (Gaussian) feature with internal material constraint	GI	8.2.2.3.1
Minimum circumscribed feature	N	8.2.2.3.1
Maximum inscribed feature	X	8.2.2.3.1
Parameter specification elements		
Total range of deviations	T	8.2.2.3.2
Peak height	P	8.2.2.3.2
Valley depth	V	8.2.2.3.2
Standard deviation	Q	8.2.2.3.2

For drawing default symbols, see Table 6.

a See also ISO 1660, ISO 2692 and ISO 5458.

b The letters, values and characteristic symbols in these symbols are examples.

c The CZ symbol was called “common zone” in the former version of this document.

© ISO 2017 – All rights reserved

Documents
Document Sharing Hub
Full document details: BS EN ISO 1101:2017

Table 3 *(continued)*

Description	Symbol	Clause
Toleranced feature identifiers		
Between	◄►	3.5, 7.2, 8.2.2.1.1, 8.2.2.1.3, 8.4.2, 9.1.3 and 9.1.4
United Feature	UF	3.9 and 8.4.2
Minor diameter	LD	8.4.2
Major diameter	MD	8.4.2
Pitch diameter	PD	8.4.2
All around (profile)		9.1.2
All over (profile)		9.1.2
Tolerance indicator		
Geometrical specification indication without datum section		8.2
Geometrical specification indication with datums section	D [b]	8.2 and ISO 5459
Auxiliary feature indicators		
Any cross-section	ACS	8.4.2
Intersection plane indicator	// B [b]	Clause 13
Orientation plane indicator	// B [b]	Clause 14
Direction feature indicator	// B [b]	Clause 15
Collection plane indicator	// B [b]	Clause 16
Theoretically exact dimension symbol		
Theoretically exact dimension (TED)	50 [b]	10

For drawing default symbols, see Table 6.

[a] See also ISO 1660, ISO 2692 and ISO 5458.

[b] The letters, values and characteristic symbols in these symbols are examples.

[c] The CZ symbol was called “common zone” in the former version of this document.

Table 4 — Additional symbols defined in other standards

Description	Symbol	Reference
Material condition specification element		
Maximum material requirement	Ⓜ	ISO 2692
Least material requirement	Ⓛ	ISO 2692
Reciprocity requirement	Ⓡ	ISO 2692
State specification element		
Free state condition (non-rigid parts)	Ⓕ	ISO 10579

[a] The letters, values and characteristic symbols in these symbols are examples.

© ISO 2017 – All rights reserved
Documents
Document Sharing Hub
Full document details: BS EN ISO 1101:2017

Table 4 *(continued)*

Description	Symbol	Reference
Datum related symbols		
Datum Feature Indicator	E [a]	ISO 5459
Datum Target Indicator	ϕ4 / A1 [a]	ISO 5459
Contacting feature	CF	ISO 5459
Orientation constraint only	><	ISO 5459
Size tolerance related symbol		
Envelope requirement	Ⓔ	ISO 14405-1
[a] The letters, values and characteristic symbols in these symbols are examples.		

6 Toleranced features

A geometrical specification applies to a single complete feature unless specifically indicated otherwise. When the toleranced feature is not a single complete feature, see 8.4.2, Clause 9 and Clause 11.

When the geometrical specification refers to the integral feature, the geometrical specification indication shall be connected to the toleranced feature by a reference line, see 8.4.1, and a leader line terminating in one of the following ways:

— In 2D annotation, on the outline of the feature or an extension of the outline (but clearly separated from the dimension line) [see Figures 1 a) and 2 a)]. The termination of the leader line is

  — an arrow if it terminates on an outline or an extension line of the feature, or

  — a dot when the leader line terminates within the bounds of the feature [see Figure 3 a)]. When the surface is visible, the dot is filled out; when the surface is hidden the dot is not filled out and the leader line is a dashed line.

  — The arrow may be placed on a reference line using a leader line to point to the surface [see Figure 3 a)].

— In 3D annotation, on the integral feature or an extension of the outline (but clearly separated from the dimension line) [see Figures 1 b) and 2 b)]. The termination of the leader line is an arrow on an extension line and a dot on the integral feature. When the surface is visible, the dot is filled out; when the surface is hidden the dot is not filled out and the leader line is a dashed line.

— The termination of the leader line may be an arrow placed on a reference line using a leader line to point to the surface [see Figure 3 b)]. The above rules for the dot terminating the leader line also apply in this case.

© ISO 2017 – All rights reserved

Documents
Document Sharing Hub
Full document details: BS EN ISO 1101:2017

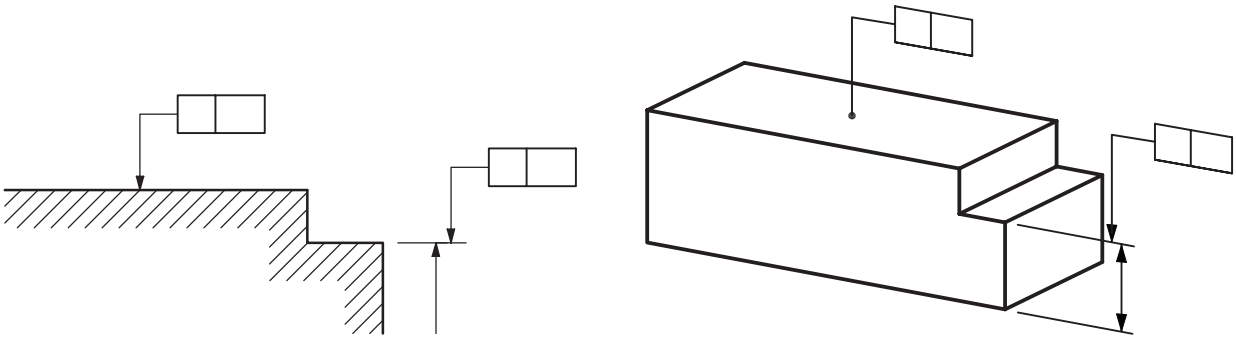

a) 2D b) 3D

Figure 1 — Indication of integral feature specification

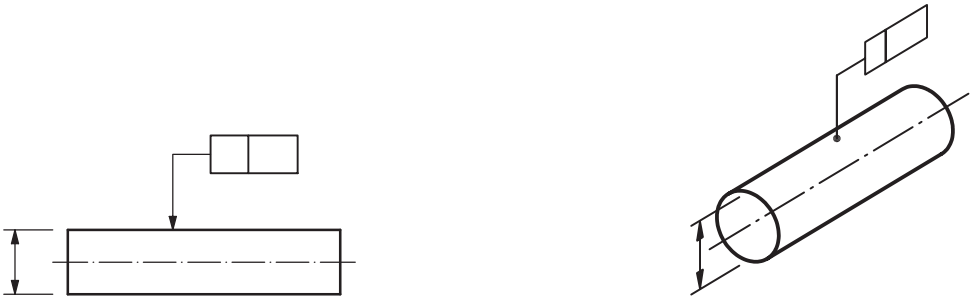

a) 2D b) 3D

Figure 2 — Indication of integral feature specification

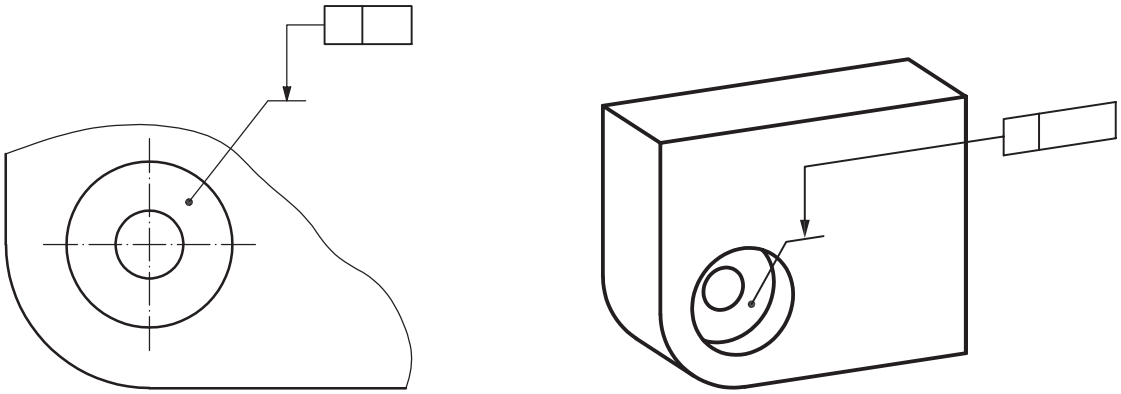

a) 2D indication b) 3D indication

Figure 3 — Connecting the specification to the toleranced feature using a reference line and a leader line

When the geometrical specification refers to a derived feature (a median point, a median line, or a median surface), it shall be indicated either

— by a reference line, see 8.4.1, and a leader line terminated by an arrow on the extension of the dimension line of a feature of size (see the examples in Figures 4, 5, and 6), or

© ISO 2017 – All rights reserved
Documents
Document Sharing Hub
Full document details: BS EN ISO 1101:2017

— in the case of a revolute, by a modifier Ⓐ (median feature) placed in the zone, feature and characteristic section of the tolerance indicator. In this case, the leader line does not have to terminate on the dimension line, but can terminate with a dot on the integral feature or an arrow on the outline or an extension line (see Figure 7).

NOTE The modifier Ⓐ can only be used for revolutes and not for other types of features of size, because in other cases it can be ambiguous which is the other feature making up the feature of size.

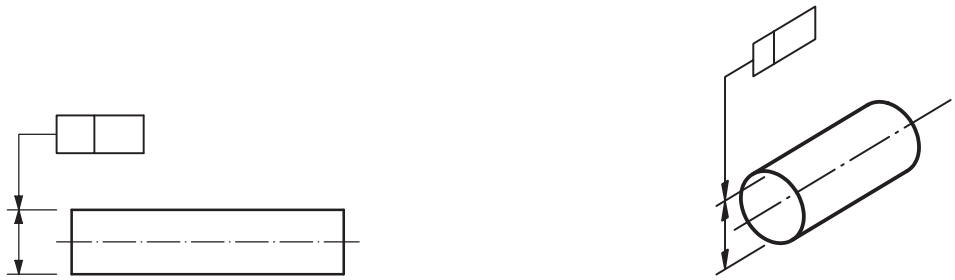

a) 2D **b) 3D**

Figure 4 — Indication of derived feature specification

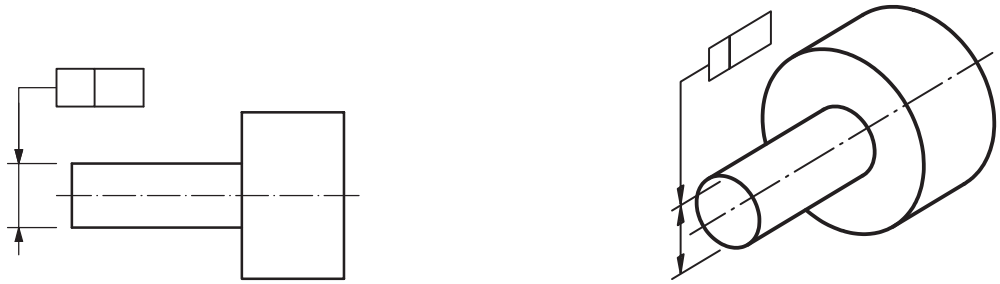

a) 2D **b) 3D**

Figure 5 — Indication of derived feature specification

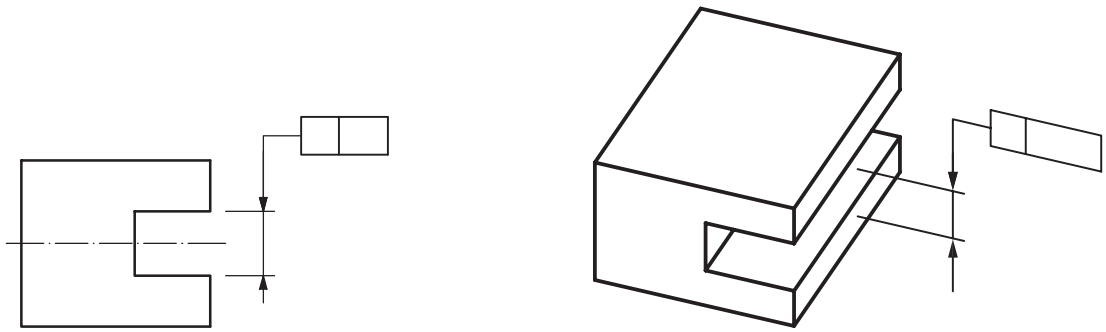

a) 2D **b) 3D**

Figure 6 — Indication of derived feature specification

© ISO 2017 – All rights reserved

Documents
Document Sharing Hub
Full document details: BS EN ISO 1101:2017

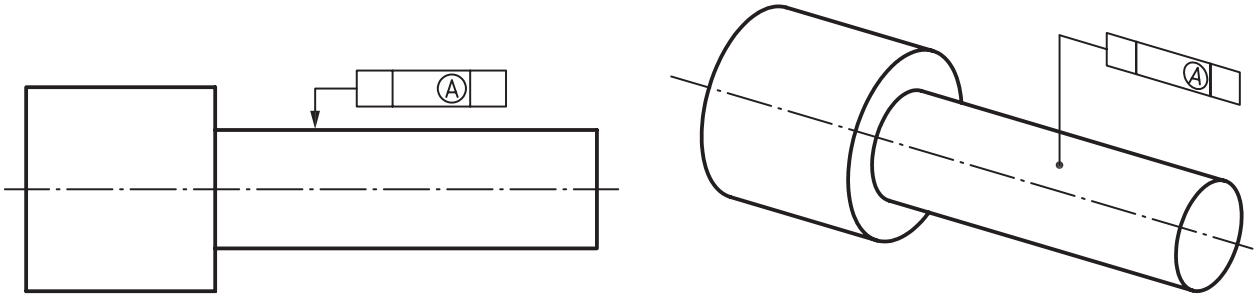

a) 2D b) 3D

Figure 7 — Indication of median feature specification

If necessary, an intersection plane indicator shall be used to specify that the toleranced feature is a set of lines, see Figure 122, instead of a surface, see Figure 126.

NOTE When the toleranced feature is a derived line, a further indication may be needed to control the orientation of the tolerance zone, see Figure 114.

7 Tolerance zones

7.1 Tolerance zone defaults

The tolerance zone shall be positioned symmetrically around the reference feature unless otherwise indicated (see 8.2.2.1.3). The tolerance value defines the width of the tolerance zone. The local width of the tolerance zones shall apply normal to the specified geometry (see Figures 8 and 9) unless otherwise indicated. See Clause 15.

For roundness of revolute surfaces that are neither cylindrical nor spherical, e.g. cones, the direction of the width of the tolerance zones shall always be indicated. See Clause 15.

NOTE The orientation alone of the leader line does not influence the definition of the tolerance zone, except in the case where the orientation of the leader line and therefore the direction of the width of the tolerance zone is indicated by a TED. See Clause 15.

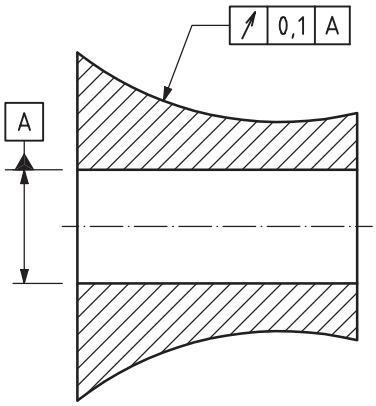

Figure 8 — Drawing indication

© ISO 2017 – All rights reserved
Documents
Document Sharing Hub
Full document details: BS EN ISO 1101:2017

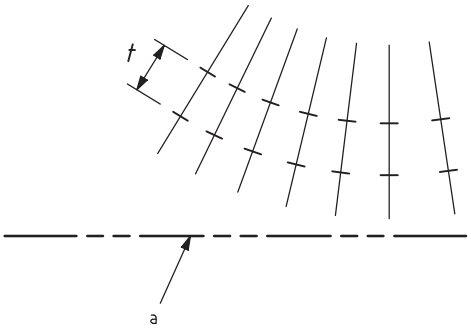

a Datum A.

Figure 9 — Interpretation

7.2 Tolerance zones of variable width

The tolerance value is constant along the length of the considered feature, unless otherwise indicated by a graphical indication, defining a proportional variation from one value to another, between two specified locations on the considered feature, identified as given in 8.2.2.1.1 and 9.1.4 (see Figure 10). By default, the proportional variation follows the curvilinear distance, i.e. the distance along the curve connecting the two specified locations. See also ISO 1660 for further information.

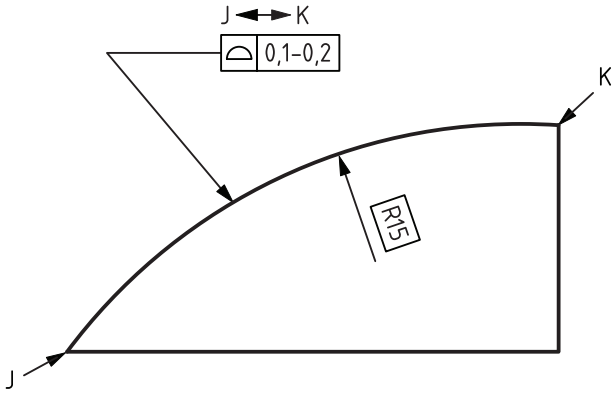

Figure 10 — Drawing indication for variable width specification using the between symbol

7.3 Orientation of tolerance zones for derived features

For derived features, in the case of a tolerance zone consisting of two parallel planes limiting a median line or a tolerance zone consisting of a cylinder limiting a centre point of a circle or a sphere, the orientation of the planes or the cylinder shall be controlled by an orientation plane indicator. See Clause 14 and Figures 114 to 117.

NOTE Instead of using orientation plane indicators, similar requirements can often be indicated using the orientation only modifier, see ISO 5459, instead.

7.4 Cylindrical and spherical tolerance zones

The tolerance zone shall be cylindrical or circular if the tolerance value in the second section of the tolerance indicator is preceded by the symbol "⌀", see the example in Figure 94, or spherical if it is preceded by the symbol "S⌀", see Figure 150.

© ISO 2017 – All rights reserved

Documents
Document Sharing Hub
Full document details: BS EN ISO 1101:2017

8 Geometrical specification indication

8.1 General

A geometrical specification indication consists of a tolerance indicator, optional plane and feature indications and optional adjacent indications. See Figure 11.

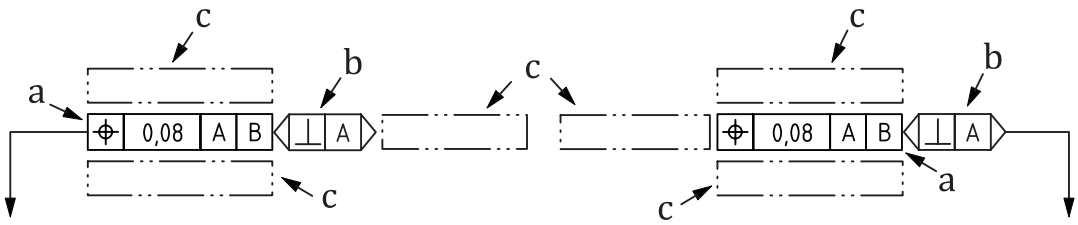

Key

a tolerance indicator

b plane and feature indicator

c adjacent indications

Figure 11 — Elements of a geometrical specification indication

The geometrical specification indication shall be connected to the leader line by a reference line. The reference line shall be attached to the mid-point of the left hand end or the right hand end of the tolerance indicator, if there is no optional plane and feature indication. If there are optional plane and feature indication(s), the reference line shall be attached to the mid-point of the left hand end of the tolerance indicator or the mid-point of the right hand end of the last plane and feature indicator. This applies both in 2D and 3D.

8.2 Tolerance indicator

The requirements shall be indicated in a rectangular frame which is divided into two or three sections. The third, optional, datum section may consist of one to three compartments. The sections are always arranged from left to right as in Figure 12.

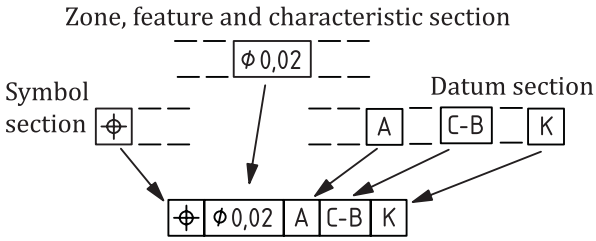

Figure 12 — Three sections of the tolerance indicator

NOTE The tolerance indicator was formerly called the tolerance frame.

8.2.1 Symbol section

The symbol section shall contain the symbol for the geometrical characteristic. See Table 2.

8.2.2 Zone, feature and characteristic section

An overview of which specification elements can be used in the zone, feature and characteristic section of the tolerance indicator is shown in Figure 13. Figure 13 also shows the grouping and sequence in which these specification elements shall be indicated.

© ISO 2017 – All rights reserved
Documents
Document Sharing Hub
Full document details: BS EN ISO 1101:2017

The specification elements are explained in the following subclauses in the sequence shown in Figure 13. All specification elements are optional except the width element.

Tolerance zone					Toleranced feature				Characteristic		Material condition	State
Shape	Width and extent	Comb.	Specified offset	Con-straint	Filter[a]		Ass. tol. feature	Derived feature	Association[b]	Parameter[c]		
					Type	Indices						
ϕ Sϕ	0,02 0,02–0,01 0,1/75 0,1/75×75 0,2/ϕ4 0,2/75×30° 0,3/10°×30°	CZ SZ	UZ+0,2 UZ–0,3 UZ+0,1:+0,2 UZ+0,2:–0,3 UZ–0,2:–0,3	OZ VA ><	G S etc.	0,8 –250 0,8–250 500 –15 500–15 etc.	Ⓒ Ⓖ Ⓝ Ⓣ Ⓧ	Ⓐ Ⓟ Ⓟ25 Ⓟ32–7	C CE CI G GE GI X N	P V T Q	Ⓜ Ⓛ Ⓡ	Ⓕ
1a	1b	2[d]	3	4[d]	5a	5b	6	7[d]	8	9	10[d]	11
8.2.2.1					8.2.2.2				8.2.2.3		8.2.2.4	8.2.2.5

a For filters, see Tables C.1 and C.2.

b For associations, see Table D.1.

c For parameters, see Table D.2

d For this column, it is possible to use more than one of the listed modifiers.

NOTE 1 The list of modifiers may be extended.

NOTE 2 Some of the information about the toleranced feature may be in adjacent indications, see 8.4.4.

NOTE 3 The last row in the figure indicates the subclause where the interpretation of the specification elements is defined.

NOTE 4 The associated toleranced feature specification element changes the toleranced feature, see 8.2.2.2.2. The characteristic association specification element changes the reference feature from which characteristic parameters are calculated, see 8.2.2.3.1.

Figure 13 — Specification elements in the tolerance zone, feature and characteristic section of the tolerance indicator

There shall be a space between specification elements from different numbered compartments, except specification elements in compartments 6, 7, 10 and 11 (letters in circles) shall not be preceded by a space.

There shall be no spaces between the specification elements within one numbered compartment or between the specification elements in compartment 1a and 1b and 5a and 5b, respectively.

If required, the filtering of the toleranced feature shall be defined by one or more letters followed immediately by numbers without a space, see Figures E.9 to E.18.

The associated feature that the deviation is calculated from and/or the parameter shall be defined by one or more letters from compartments 8 and 9 not followed by numbers. This is how these specification elements can be distinguished from the filtering specification elements. This indication does not change the toleranced feature, see Figures 38 to 41 and Figures 44 to 45.

8.2.2.1 Tolerance zone specification elements

8.2.2.1.1 Shape, width and extent specification elements

The shape specification element is an optional specification element.

© ISO 2017 – All rights reserved

Documents
Document Sharing Hub
Full document details: BS EN ISO 1101:2017

By default:

— if the toleranced feature is a surface, then the shape of the tolerance zone is defined as the space between two equidistant surfaces based on the nominal geometry of the toleranced feature, see 17.8 for an example.

— if the toleranced feature is an integral line, then the shape of the tolerance zone is defined as the area between two equidistant lines in the intersection plane based on the nominal geometry of the toleranced feature, see 17.6 for an example.

— if the toleranced feature is a nominally straight derived line, then the shape of the tolerance zone is defined as the space between two equidistant planes, see 17.10.2 for an example.

If the toleranced feature is a line or a point and the tolerance zone is a circle, a cylinder, or a circular tube, the tolerance value shall be preceded by the symbol "⌀" see Figures 94 and 95. If the toleranced feature is a point and the tolerance zone is spherical, the tolerance value shall be preceded by the symbol "S⌀", see Figure 150.

The tolerance value is a mandatory specification element. The tolerance value shall be given in the unit used for linear dimensions. The tolerance value gives the width of the tolerance zone, which is by default perpendicular to the toleranced feature.

By default, the tolerance zone has a constant width. If the width of the tolerance zone varies linearly between two values, these two values shall be indicated separated by a "-", see Figure 14 and 7.2.

An indication using the between symbol adjacent to the tolerance indicator, see 9.1.4, shall be used to identify the two locations where each value applies, see Figure 14.

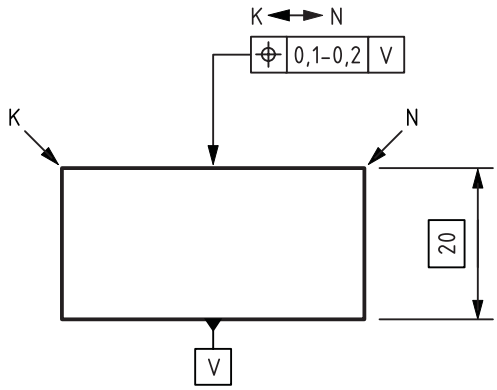

Figure 14 — Specification of a linearly variable tolerance zone

If the variation is not linear, it shall be indicated by other means.

By default, the specification applies to the entire toleranced feature. If the specification applies to any restricted portion within the total extent of the feature, the extent of the restricted portion in linear or angular units, or both, (as applicable) shall be added after the tolerance value and separated from it by an oblique stroke. If a tolerance applies to a specific restricted portion within the extents of the feature, the methods in 9.1.3 are used. Figure 15 shows a requirement that is limited to line elements. Figure 16 shows a requirement that is limited to circular areas. See also Clause 11.

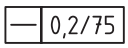

Figure 15 — Linear-restricted tolerance zone specification

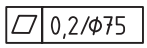

Figure 16 — Circular area restricted tolerance zone specification

© ISO 2017 – All rights reserved
Documents
Document Sharing Hub
Full document details: BS EN ISO 1101:2017

8.2.2.1.2 Combination specification element

If the specification applies to several features, see Figures 17 to 20, an indication shall be given indicating how the specification applies to the features.

By default, the specification requirement for each toleranced feature is independent, due to the independency principle, see ISO 8015.

The indication SZ can optionally be indicated to emphasize the independency of the feature requirements; however it does not change the meaning of the indication in this case, see Figure 53. SZ stands for "Separate Zones".

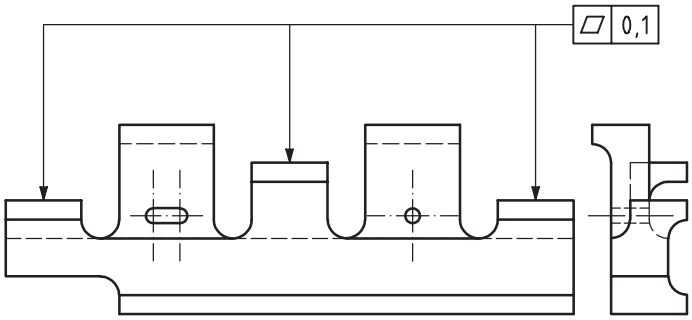

Figure 17 — Specification applying to several features individually

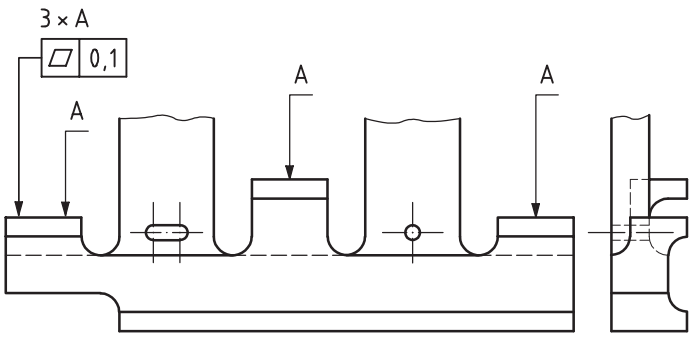

Figure 18 — Specification applying to several features individually

Where one combined tolerance zone is applied to several separate features, or several combined tolerance zones (controlled by the same tolerance indicator) are applied simultaneously to several separate features (not independently), the requirement shall be indicated by the symbol CZ for combined zone, see Figures 19 and 20. The indication shall be supplemented by an indication that the specification applies to several features [either using e.g. "3×" in an adjacent indication area (see 8.4 and Figure 18), or using, for example, three leader lines attached to the tolerance indicator (see Figure 19), but not both].

Where CZ is indicated in tolerance indicator (see Figures 19 and 20), all the related individual tolerance zones shall be constrained in location and in orientation amongst themselves using either explicit theoretically exact dimensions (TED), or implicit TEDs, see 3.7 Note 4 to entry.

© ISO 2017 – All rights reserved

Documents
Document Sharing Hub
Full document details: BS EN ISO 1101:2017

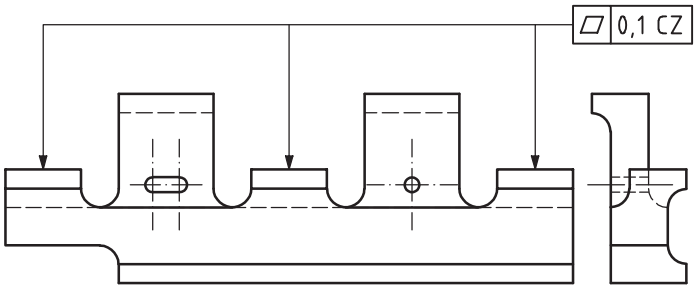

Figure 19 — Combined zone specification applying to several features

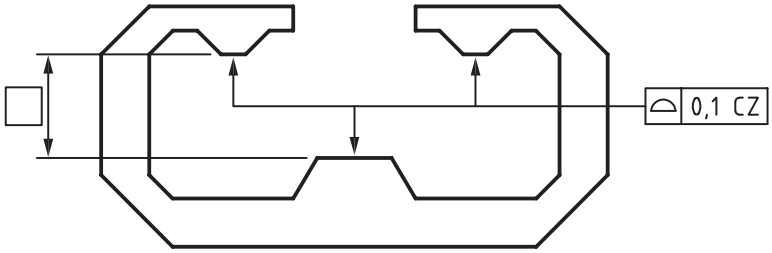

NOTE If the toleranced features are flat surfaces, the position symbol can be used with the same meaning.

Figure 20 — Combined zone specification applying to several features

The specification element CZ can be used to create a pattern; for more details on patterns, see ISO 5458.

In case of ambiguity, either SZ or CZ shall be indicated. When using “all around” or “all over”, separate rules apply, see 9.1.2.

8.2.2.1.3 Specified tolerance zone offset specification element

By default, the tolerance zone is symmetrical around the theoretically exact feature (TEF), making it the reference feature. The tolerance zone offset using UZ is an optional specification element. See Figure 21.

© ISO 2017 – All rights reserved
Documents
Document Sharing Hub
Full document details: BS EN ISO 1101:2017

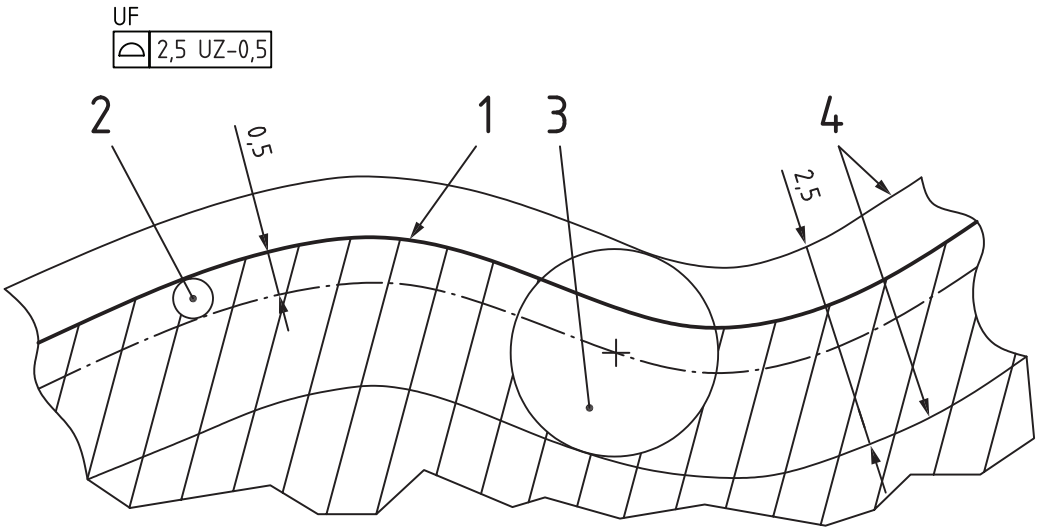

Key

1 single complex theoretically exact feature (TEF) in this example, the material is below the feature

2 one of the infinite number of spheres defining the offset theoretical feature, i.e. the reference feature

3 one of the infinite number of spheres defining the tolerance zone along the reference feature

4 limits of the tolerance zone

For profile specifications of complex lines or surfaces, the UZ specification element may be used with or without datums.

Figure 21 — Offset tolerance zone with specified offset

The extracted surface shall be contained between two equidistant surfaces enveloping spheres of defined diameter equal to the tolerance value, the centres of which are situated on a surface corresponding to the envelope of a sphere in contact with the TEF and whose diameter is equal to the absolute value given after UZ with the direction of the offset indicated by the sign, the "+" sign indicating "out of the material" and the "–" sign "into the material", see Figure 22. The sign of the offset shall always be indicated. For former practice, see A.3.9.

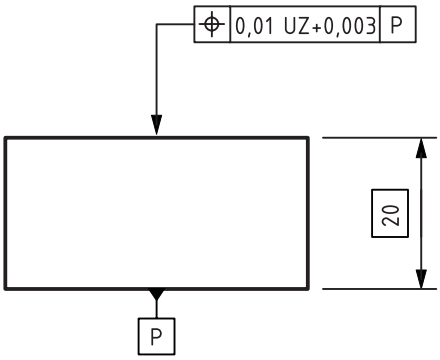

NOTE The UZ specification element in combination with the position symbol can only be used for planar features.

Figure 22 — Offset tolerance zone specification

If the offset of the tolerance zone varies linearly between two values, these two values shall be indicated separated by a colon ":", see Figure 13. In this case, one of the offset values can be a zero and is then indicated without a sign. An indication using the between symbol adjacent to the tolerance indicator, see 9.1.4, similar to the one used in Figure 14 shall be used to identify the ends of the tolerance zone where each offset value applies.

© ISO 2017 – All rights reserved

Documents
Document Sharing Hub
Full document details: BS EN ISO 1101:2017

If the offset variation is not linear, it shall be specified, e.g. in the CAD model.

The UZ specification element can only be used for integral features.

8.2.2.1.4 Constraint specification elements

8.2.2.1.4.1 Unspecified linear tolerance zone offset specification element

If the tolerance zone is allowed to be offset from being symmetric around the TEF by a constant but unspecified amount, the symbol OZ shall be indicated.

The nominal size of the TEF may not be defined by a TED for circles, cylinders, spheres and tori, e.g. in the case where there is only a ± tolerance indicated for the size. In this case, the OZ specification element shall always be indicated for line profile specifications and surface profile specifications to make it explicit that the size of the TEF is not fixed.

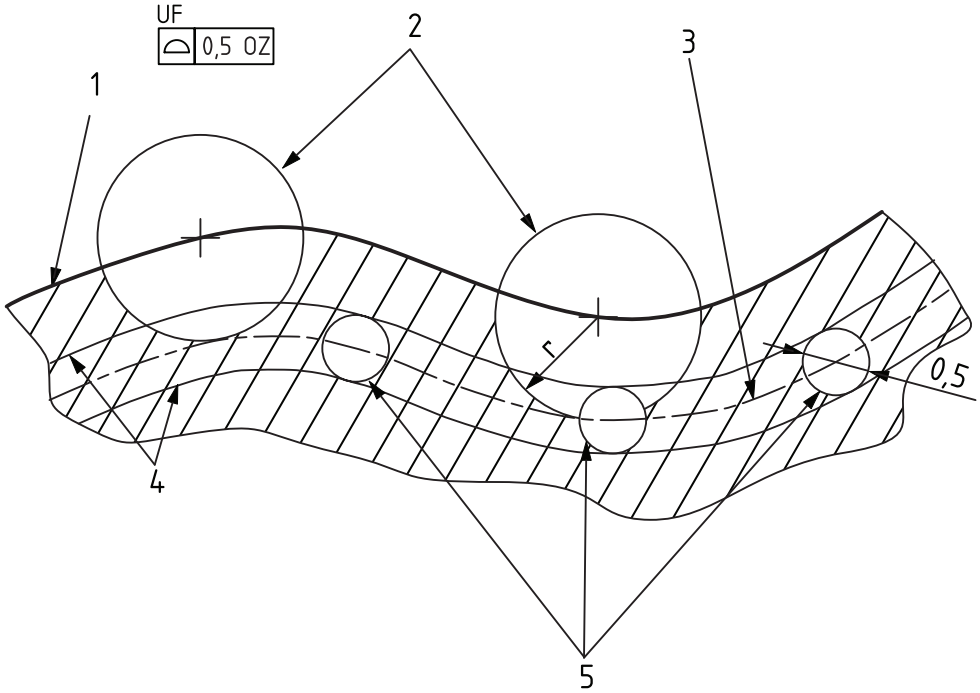

Key

1 single complex theoretically exact feature (TEF)

2 two of the infinite number of spheres or circles defining the offset theoretical feature, i.e. the reference feature

3 reference feature, equidistant from the TEF

4 limits of the tolerance zone

5 three of the infinite number of spheres or circles defining the tolerance zone along the reference feature

r constant, but unspecified offset

This figure shows how the shape of the offset tolerance zone is defined from the TEF. For a form tolerance, i.e. a tolerance without reference to datums, the TEF is unconstrained, i.e. the tolerance zone, when combined with an offset value, may adopt any location or orientation when attempting to fit to the toleranced feature (see 4.8). TEDs and reference to one or more datums in the tolerance indicator can be used to constrain the TEF together with the zone.

Figure 23 — Offset tolerance zone with unspecified offset

NOTE 1 Because there are no bounds on the offset, a specification with the OZ modifier is usually combined with a specification using a larger tolerance without the OZ modifier. When both specifications are satisfied, this combination controls the shape of the tolerance feature within the larger, fixed tolerance zone.

© ISO 2017 – All rights reserved
Documents
Document Sharing Hub
Full document details: BS EN ISO 1101:2017

NOTE 2 For flat surfaces and straight lines, it is often possible to use, for example, parallelism instead of position to achieve the same effect as OZ.

8.2.2.1.4.2 Unspecified angular tolerance zone offset specification element

The VA modifier shall be indicated in the zone, feature and characteristic section of the tolerance indicator when the tolerance zone is defined from a TEF, which is an angular feature of size, having its size considered variable (unspecified), see Figure 24. See also example in ISO 3040.

The nominal angular size of the TEF may not be defined by a TED for cones, e.g. in the case where there is only a ± tolerance indicated for the angular size. In this case, the VA specification element shall always be indicated for line profile specifications and surface profile specifications to make it explicit that the angular size of the TEF is not fixed.

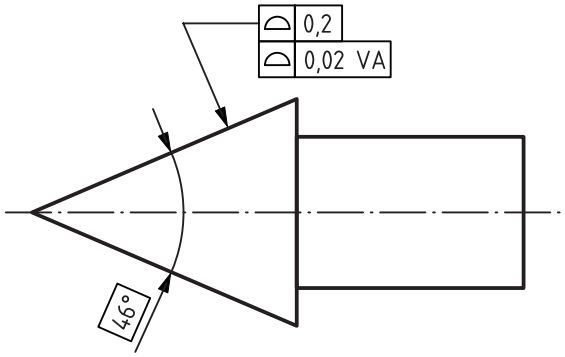

Figure 24 — Variable angle, VA, modifier

NOTE Because there are no bounds on the angular offset, a specification with the VA modifier is usually combined with another specification (angular dimensional specification or geometrical specification without VA modifier), see example in Figure 24.

8.2.2.1.4.3 Orientation only specification element

The orientation only symbol >< shall be indicated in the zone, feature and characteristic section of the tolerance indicator when the tolerance zone translation is unconstrained, i.e. only rotational degrees of freedom for the tolerance zone are constrained in a specification that would otherwise have its translational degrees of freedom constrained by datums. See also ISO 5459.

NOTE 1 For flat surfaces and straight lines, it is often possible to use, for example, parallelism instead of position to achieve the same effect as orientation only.

NOTE 2 Orientation only allows the tolerance zone to translate untransformed, whereas the tolerance zone is transformed when using OZ (inside radii becomes smaller and outside radii becomes bigger). This difference is significant for non-straight and non-flat surfaces and for features of size. In Figure 23, if orientation only had been used instead of OZ, key 3 would not have been transformed, but would have had the same shape as key 1. For single flat surfaces and single straight lines, the effect of OZ and orientation only is the same.

8.2.2.2 Toleranced feature specification element

8.2.2.2.1 Filter specification elements

All the terms related to filtration are defined in ISO 16610-1:2015. The specific filters are defined in the other parts of ISO 16610.

© ISO 2017 – All rights reserved

Documents
Document Sharing Hub
Full document details: BS EN ISO 1101:2017

Currently, there is no default filtering defined in the GPS standards. Consequently, the filtering is undefined if it is not explicitly given using these specification elements or other means, see also C.3. This adds an ambiguity of specification, see ISO 17450-2.

NOTE See A.3.7 for former filtering practice.

The filter specification is an optional specification element. The specified filtering of the toleranced feature shall be indicated by a combination of two specification elements. One indicates the type of filter specified, the other indicates the nesting index or indices for the filter.

The symbols for the standardized filters are given in Table C.1. For details on the effect of filters and examples of filter indications, see Annex E.

The nesting indices and their meaning for each filter type are given in Table C.2. For a long-wave pass filter the index shall be followed by a "-". For a short-wave pass filter the index shall be preceded by a "-" . For a band pass filter using the same filter type for both sides, the long-wave pass filter index shall be given first and the short-wave pass filter index shall be given second. The indices shall be separated by a "-" .

For Fourier filters only, indicated by the specification element F (Fourier), a single value shall be indicated when the specification applies to a single harmonic (wavelength or UPR number). If the specification applies to a filtered feature containing a range of harmonics, the indication shall follow the rules given above.

For band pass filters using different filter types, the long-wave pass filter shall be indicated before the short-wave pass filter.

In the specification operator for band pass filters, the long-wave pass filter shall be applied before the short-wave pass filter.

Short-wave pass filters and band pass filters shall only be used for form specifications, i.e. specifications that do not reference datums, because they remove the location and orientation attributes from the toleranced feature.

For open features, e.g. straight lines, planes and cylinders in the axial direction, the nesting index shall be indicated in mm. For closed features, e.g. cylinders in the circumferential direction, tori and spheres, the nesting index shall be indicated in UPR (undulations per revolution). The units shall not be indicated.

If two different filters shall be used in the two directions for a feature that is open in both directions, e.g. a plane, an intersection plane indicator shall be used to indicate the direction in which the first indicated filter shall be applied. "×" shall be used to separate the two filter indications. The second indicated filter shall be applied in the direction perpendicular to the first filter direction.

For a feature that is open in one direction and closed in the other direction, e.g. a cylinder, the filter for the open direction shall be indicated before the filter for the closed direction. "×" shall be used to separate the two filter indications.

If both filters are of the same type, regardless of whether the two directions are both open (e.g. a plane), both closed (e.g. a sphere) or one of each (e.g. a cylinder), the filter type shall be indicated only once.

When the toleranced feature is a derived feature or an associated feature, the filtration shall be applied on the integral feature before the derivation or association operation.

See E.2 for examples of specifications using filters.

8.2.2.2.2 Associated toleranced feature specification element

By default, the specification applies to the indicated extracted integral or derived feature itself. The associated toleranced feature specification element is an optional specification element. It shall be used to indicate that the specification does not apply to the indicated feature itself, but to a feature associated with it. If a filter is indicated, the association shall be to the filtered feature.

© ISO 2017 – All rights reserved
Documents
Document Sharing Hub
Full document details: BS EN ISO 1101:2017

The associated toleranced feature specification element shall only be used for specifications that reference datums, i.e. orientation and location specifications.

If the associated toleranced feature specification element is used together with a filter specification element, the association shall be to the filtered feature as the non-ideal feature.

When the toleranced feature is a derived feature, the associated feature shall be the indirectly associated feature, see ISO 22432.

The extent of the associated toleranced feature shall be equal to the extent of the feature to which it is associated.

The associated toleranced feature specification element shall not be used together with a reference feature association specification element, see 8.2.2.3.1, a parameter specification element, see 8.2.2.3.2, or a material condition specification element, see ISO 2692.

The following associated toleranced feature specification elements are available.

Ⓒ shall be used to indicate that the toleranced feature is the associated minimax (Chebyshev) feature without material constraint. This specification element can be used for features that are nominally straight lines, planes, circles, cylinders, cones and tori.

Figure 25 shows an example of a position specification that applies to the associated minimax (Chebyshev) feature. See also Figure 26.

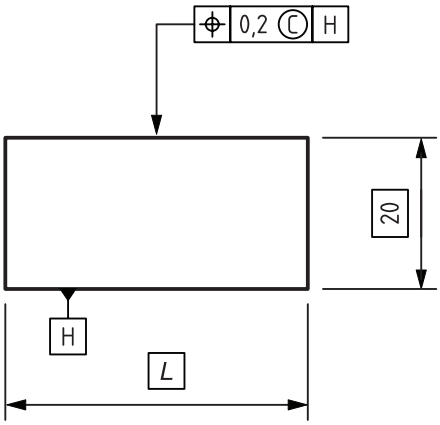

Figure 25 — Minimax (Chebyshev) associated toleranced feature — Drawing indication

© ISO 2017 – All rights reserved

Documents
Document Sharing Hub
Full document details: BS EN ISO 1101:2017

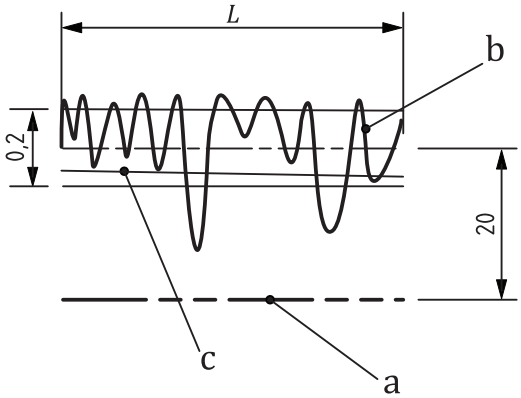

Key

a datum H

b real feature or filtered feature

c minimax (Chebyshev) feature (toleranced feature)

NOTE The toleranced feature is a surface, but for ease of illustration it is shown as a line.

Figure 26 — Minimax (Chebyshev) associated toleranced feature — Interpretation

Ⓖ shall be used to indicate that the toleranced feature is the associated least squares (Gaussian) feature without material constraint. This specification element can be used for features that are nominally straight lines, planes, circles and cylinders, cones and tori.

Figure 27 shows an example of a position specification that applies to the associated least squares (Gaussian) feature. See also Figure 28.

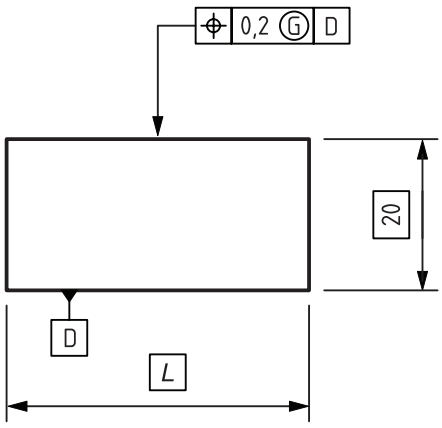

Figure 27 — Least squares (Gaussian) associated toleranced feature — Drawing indication

© ISO 2017 – All rights reserved
Documents
Document Sharing Hub
Full document details: BS EN ISO 1101:2017

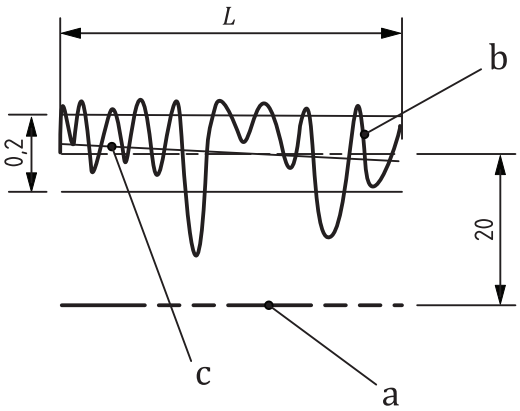

Key

a datum D

b real feature or filtered feature

c least squares (Gaussian) associated feature (toleranced feature)

NOTE The toleranced feature is a surface, but for ease of illustration it is shown as a line.

Figure 28 — Least squares (Gaussian) associated toleranced feature — Interpretation

Ⓝ shall be used to indicate that the toleranced feature is the associated minimum circumscribed feature or its derived feature. The minimum circumscribed feature association minimizes the size of the associated feature with the constraint that the associated feature circumscribes the non-ideal feature. This specification element can only be used for features of linear size.

Figure 29 shows an example of a position specification that applies to the associated minimum circumscribed feature. See also Figure 30.

NOTE Although the Ⓝ specification element is usually used for external features, e.g. shafts as in Figure 29, it can also be used for internal features, e.g. holes.

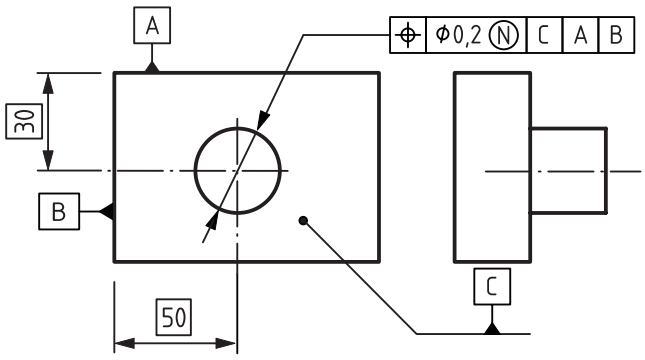

Figure 29 — Minimum circumscribed associated toleranced feature — Drawing indication

© ISO 2017 – All rights reserved

Documents
Document Sharing Hub
Full document details: BS EN ISO 1101:2017

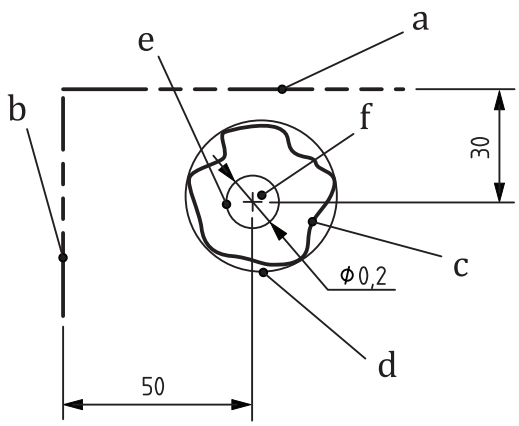

Key

a datum A

b datum B

c real feature or filtered feature

d minimum circumscribed feature

e tolerance zone

f toleranced feature (centreline for d)

NOTE The toleranced feature is a straight line (the centre line of the associated feature), but for ease of illustration it is shown as a point.

Figure 30 — Minimum circumscribed associated toleranced feature — Interpretation

Ⓣ shall be used to indicate that the toleranced feature is the associated tangent feature based on the L_2 norm with the constraint that the tangent feature is outside the material of the non-ideal feature. This specification element can only be used for nominally straight lines and plane features. The toleranced feature is the tangent straight line or plane, as applicable, of the indicated feature.

NOTE The L_2 norm with the constraint that the tangent feature is outside the material is the association criterion for datums, see ISO 5459.

Figure 31 shows an example of a parallelism specification that applies to the associated tangent feature. See also Figure 32.

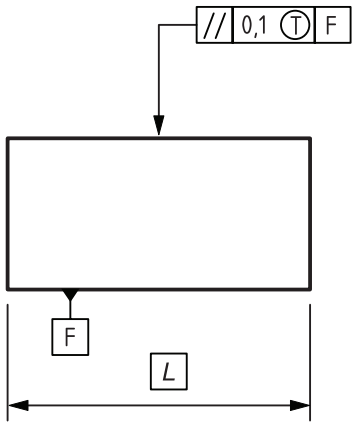

Figure 31 — Tangent associated toleranced feature — Drawing indication

© ISO 2017 – All rights reserved
Documents
Document Sharing Hub
Full document details: BS EN ISO 1101:2017

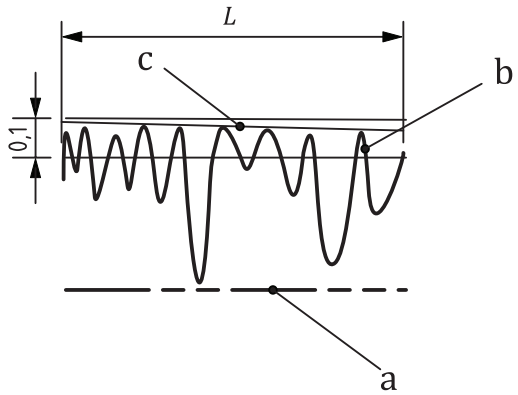

Key

a datum F

b real feature or filtered feature

c tangent feature (toleranced feature)

NOTE The toleranced feature is a surface, but for ease of illustration it is shown as a line.

Figure 32 — Tangent associated toleranced feature — Interpretation

Ⓧ shall be used to indicate that the toleranced feature is the associated maximum inscribed feature or its derived feature. The maximum inscribed feature association maximizes the size of the associated feature with the constraint that the associated feature is inscribed within the non-ideal feature. This specification element can only be used for features of linear size.

NOTE Although the Ⓧ specification element is usually used for internal features, e.g. holes as in Figure 33, it can also be used for external features, e.g. shafts.

Figure 33 shows an example of a position specification that applies to the associated maximum inscribed feature. See also Figure 34.

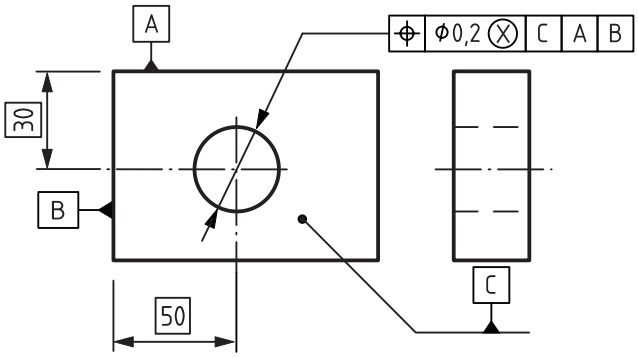

Figure 33 — Maximum inscribed associated toleranced feature — Drawing indication

© ISO 2017 – All rights reserved

Documents
Document Sharing Hub
Full document details: BS EN ISO 1101:2017

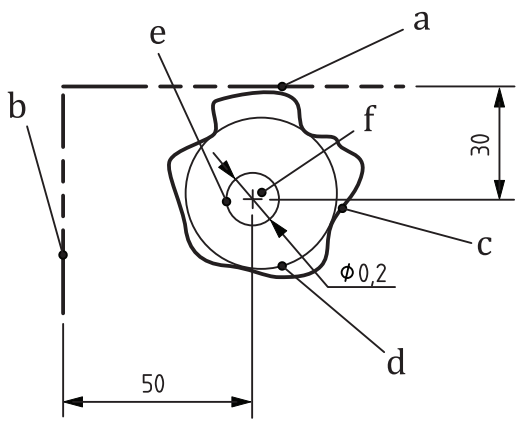

Key

a datum A

b datum B

c real feature or filtered feature

d maximum inscribed feature

e tolerance zone

f toleranced feature (centreline for d)

NOTE The toleranced feature is a straight line (the centre line of the associated feature), but for ease of illustration it is shown as a point.

Figure 34 — Maximum inscribed associated toleranced feature — Interpretation

A summary of which associated toleranced features can be applied to which types of features is shown in Table 5.

Table 5 — Summary of applicable associated toleranced features by type of feature

Type of feature	Ⓒ	Ⓖ	Ⓝ	Ⓣ	Ⓧ
Straight line	Yes	Yes		Yes	
Plane	Yes	Yes		Yes	
Circle	Yes	Yes	Yes		Yes
Cylinder	Yes	Yes	Yes		Yes
Cone	Yes	Yes			
Torus	Yes	Yes			
Feature of size: 2 parallel planes	Yes	Yes	Yes	Yes	Yes

The associated toleranced feature specification element can be combined with filter specification elements. Figure 35 shows an example where the Ⓣ specification element is combined with the H0 convex hull specification element, indicating that it is the L_2 norm tangent of the convex hull that is the toleranced feature. This toleranced feature is defined the same way a datum based on a plane datum feature is defined, see ISO 5459, thus allowing a specification to control the orientation and location of a datum. See Figure 36.

© ISO 2017 – All rights reserved
Documents
Document Sharing Hub
Full document details: BS EN ISO 1101:2017

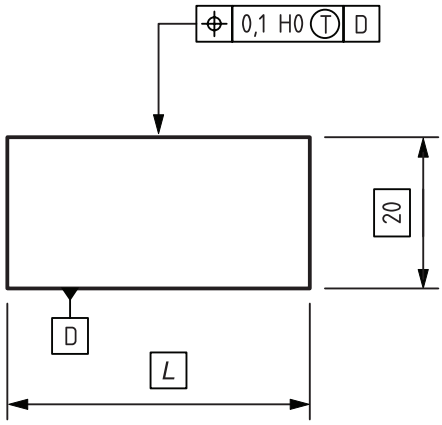

Figure 35 — Tangent toleranced feature associated to the convex hull filtered feature — Drawing indication

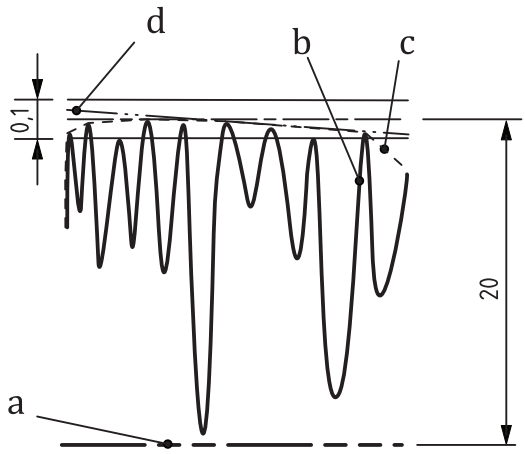

Key

a datum D

b real feature

c convex hull filtered feature

d tangent feature to the convex hull filtered feature (toleranced feature)

NOTE The toleranced feature is a surface, but for ease of illustration it is shown as a line.

Figure 36 — Tangent toleranced feature associated to the convex hull filtered feature — Interpretation

8.2.2.2.3 Derived toleranced feature specification element

By default, the specification applies to the indicated feature itself, except as given in Clause 6. The derived toleranced feature specification element is an optional specification element. It is used to indicate that the specification does not apply to the integral feature itself, but to a feature derived from it.

The following derived toleranced feature specification elements are available.

— Ⓐ is used to indicate that the toleranced feature is the derived feature. Therefore, this specification element can only be used for features of size. Because the indication would be ambiguous, if the feature of size is made up of two features, e.g. two parallel planes, this specification can only be used for revolutes. The derived feature is the median line, if the indicated feature is a cylinder, or the median point, if the indicated feature is a circle or a sphere.

© ISO 2017 – All rights reserved

Documents
Document Sharing Hub
Full document details: BS EN ISO 1101:2017

— Ⓟ is used to indicate that the tolerance zone applies to an extended feature (projected toleranced feature), see Clause 12.

Figure 37 shows an example of a straightness specification that applies to the derived feature, i.e. the median line of the cylinder.

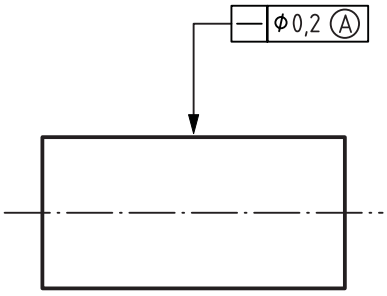

Figure 37 — Specification applying to the median feature

8.2.2.3 Characteristic specification elements

8.2.2.3.1 Reference feature association specification element

By default, the reference feature association is the minimax (Chebyshev) association without constraints. The reference feature association specification element is an optional specification element. It can be used for form specifications, i.e. specifications that do not reference datums, and other specifications that have at least one unconstrained non-redundant degree of freedom.

The following specification elements are available.

— C shall be used to indicate the minimax (Chebyshev) association. It minimizes the distance from the furthest point on the toleranced feature to the reference feature, see Figure 38 a).

— CE shall be used to indicate the minimax (Chebyshev) association with the constraint external to the material. It minimizes the distance from the furthest point on the toleranced feature to the reference feature while maintaining the reference feature external to the material, see Figure 38 b).

— CI shall be used to indicate the minimax (Chebyshev) association with the constraint internal to the material. It minimizes the distance from the furthest point on the toleranced feature to the reference feature while maintaining the reference feature internal to the material, see Figure 38 c).

NOTE 1 The minimax (Chebyshev) association without constraint, the minimax (Chebyshev) association with the constraint external to the material and the minimax (Chebyshev) association with the constraint internal to the material (keys c, g and h in Figure 38) are all by definition parallel.

© ISO 2017 – All rights reserved
Documents
Document Sharing Hub
Full document details: BS EN ISO 1101:2017

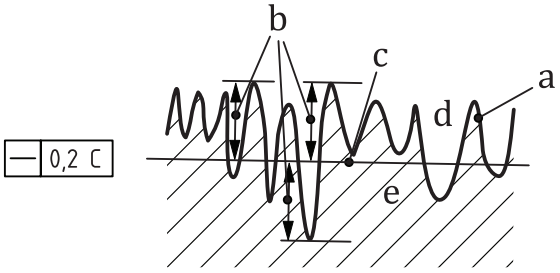

a) Minimax (Chebyshev) association without additional constraints

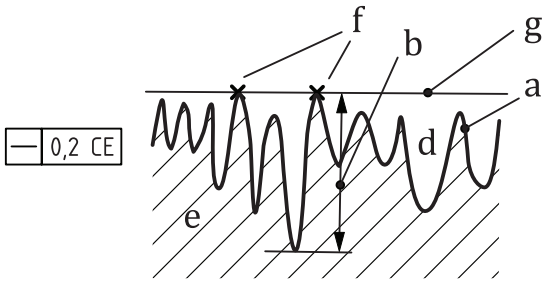

b) Minimax (Chebyshev) association with the constraint external to the material

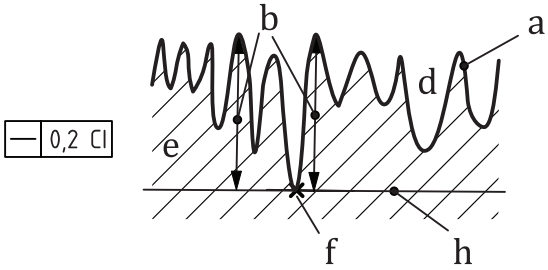

c) Minimax (Chebyshev) association with the constraint internal to the material

a Toleranced feature.

b Minimized maximum distances.

c Minimax (Chebyshev) associated straight line without additional constraints – the reference feature with modifier C.

d Outside the material.

e Inside the material.

f Point of contact between the associated feature and the toleranced feature.

g Minimax (Chebyshev) associated straight line with the constraint external to the material – the reference feature with modifier CE.

h Minimax (Chebyshev) associated straight line with the constraint internal to the material – the reference feature with modifier CI.

NOTE The tolerance indicators shown in this figure do not show a parameter specification element, see 8.2.2.3.2, so the characteristic specified is the total range of deviations, which is the default parameter.

Figure 38 — Minimax (Chebyshev) associations

— G shall be used to indicate the least squares (Gaussian) association. It minimizes the square of the local deviations of the toleranced feature to the reference feature.

© ISO 2017 – All rights reserved

Documents
Document Sharing Hub
Full document details: BS EN ISO 1101:2017

— GE shall be used to indicate the least squares (Gaussian) association with the constraint external to the material. It minimizes the square of the local deviations of the toleranced feature to the reference feature while maintaining the reference feature external to the material.

— GI shall be used to indicate the least squares (Gaussian) association with the constraint internal to the material. It minimizes the square of the local deviations of the toleranced feature to the reference feature while maintaining the reference feature internal to the material.

NOTE 2 The least squares (Gaussian) associations are similar to the minimax (Chebyshev) associations shown in Figure 38, except what is minimized is not the maximum distance to the associated feature but the square root of the sum of the squares of the local deviations between the toleranced feature and the reference feature.

NOTE 3 The least squares (Gaussian) association without constraint, the least squares (Gaussian) association with the constraint external to the material and the least squares (Gaussian) association with the constraint internal to the material (equivalent to keys c, g and h in Figure 38) are not parallel by definition.

— X shall be used to indicate the maximum inscribed association. It is only available for toleranced features of linear size. It maximizes the size of the reference feature while maintaining it entirely inside the toleranced feature. See Figure 39.

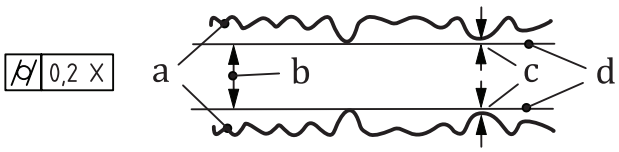

a Toleranced feature of size.

b Size of the associated feature (maximized).

c Equalized distance, in case of unstable association.

d Maximum inscribed associated feature of size.

Figure 39 — Maximum inscribed association

— N shall be used to indicate the minimum circumscribed association. It is only available for toleranced features of linear size. It minimizes the size of the reference feature while maintaining it entirely outside the toleranced feature. See Figure 40.

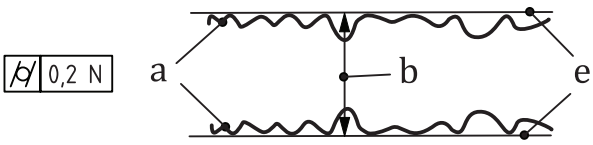

a Toleranced feature of size.

b Size of the associated feature (minimized).

e Minimum circumscribed associated feature of size.

Figure 40 — Minimum circumscribed association

Figure 41 shows an example of a straightness specification that applies relative to the least squares (Gaussian) reference feature. The intersection plane indicator indicates that the direction of the toleranced lines is parallel to datum C.

© ISO 2017 – All rights reserved
Documents
Document Sharing Hub
Full document details: BS EN ISO 1101:2017

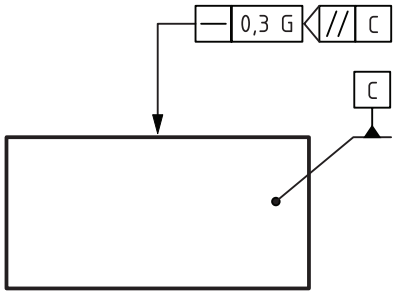

Figure 41 — Specification using the least squares (Gaussian) reference feature specification element

Figure 42 shows an example of a roundness specification that applies relative to the minimum circumscribed reference feature after the application of a Gaussian long-wave pass filter with a cutoff value of 50 UPR. The filter type specification element shall always be followed by the nesting index value and the reference feature specification element consists of letters only. When they both apply in the same specification, the filter type specification element shall always precede the reference feature specification element.

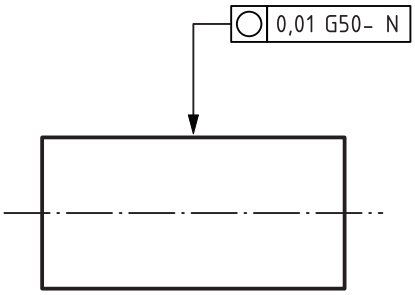

Figure 42 — Specification using a filter specification element and the minimum circumscribed reference feature specification element

8.2.2.3.2 Parameter specification element

The default parameter that applies when no specification element is indicated is the total range of deviations, i.e. the distance from the lowest valley on the toleranced feature to the reference feature plus the distance from the highest peak of the toleranced feature to the reference feature. The parameter specification element is an optional specification element. It can be used for form specifications, i.e. specifications that do not reference datums, and other specifications that have at least one unconstrained non-redundant degree of freedom.

The following parameter specification elements are available.

— T may be used to indicate the total range of deviations, i.e. the default parameter, see Figure 43.

— P shall be used to indicate the peak height, i.e. the distance from the highest peak of the toleranced feature to the reference feature. The peak height is only defined relative to the minimax (Chebyshev) association and the least squares (Gaussian) association, i.e. the association specification elements C and G, see Figure 43.

— V shall be used to indicate the valley depth, i.e. the distance from the lowest valley of the toleranced feature to the reference feature. The valley depth is only defined relative to the minimax (Chebyshev) association and the least squares (Gaussian) association, i.e. the association specification elements C and G, see Figure 43.

© ISO 2017 – All rights reserved

Documents
Document Sharing Hub
Full document details: BS EN ISO 1101:2017

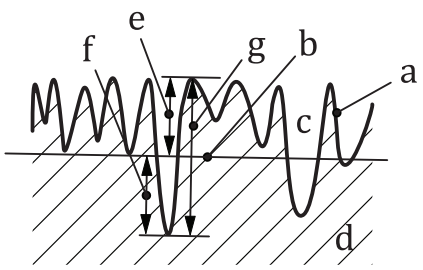

a Toleranced feature.

b Minimax (Chebyshev) or least squares (Gaussian) associated straight line without additional constraints (reference feature).

c Outside the material.

d Inside the material.

e Peak height (P) parameter.

f Valley depth (V) parameter.

g Total range (T) parameter, T = P + V.

Figure 43 — Parameters

— Q shall be used to indicate the square root of the sum of the squares of the residuals or standard deviation of the toleranced feature relative to the reference feature.

$$Q = \sqrt{\frac{1}{l}\int_0^l Z^2(x)dx} \text{ for linear features,}$$

or

$$Q = \sqrt{\frac{1}{a}\int_0^a Z^2(x)dx} \text{ for areal features}$$

where

Q is the Q parameter;

l is the length of the toleranced feature;

a is the area of the toleranced feature;

$Z(x)$ is the local deviation function for the toleranced feature;

x is the position along the toleranced feature.

NOTE 1 The origin of $Z(x)$ is the reference feature, either the default reference feature [minimax (Chebyshev) without constraint] or the reference feature specified according to 8.2.2.3.1.

NOTE 2 The T specification element is the only one that conforms to the concept of a tolerance zone.

Figure 44 shows an example of a roundness specification that applies to the valley depth relative to the least squares (Gaussian) reference circle.

© ISO 2017 – All rights reserved
Documents
Document Sharing Hub
Full document details: BS EN ISO 1101:2017

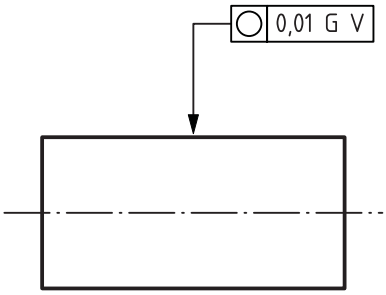

Figure 44 — Specification using the least squares (Gaussian) reference feature specification element and the valley depth characteristic specification element

Figure 45 shows an example of a cylindricity specification that applies to the peak height relative to the minimax (Chebyshev) reference cylinder after the application of a spline long-wave pass filter with cutoff values of 0,25 mm in the axial direction and 150 UPR in the circumferential direction.

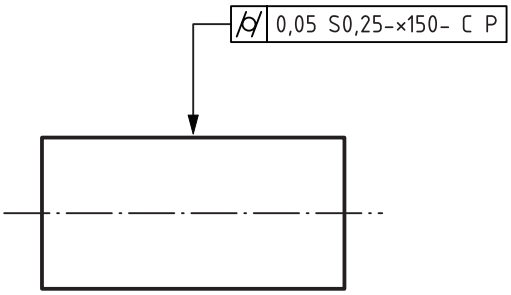

Figure 45 — Specification of a filter specification element, a reference feature specification element and a characteristic specification element

8.2.2.4 Material condition specification element

The material requirement specification elements, Ⓜ, Ⓛ and Ⓡ, are optional specification elements, see ISO 2692.

8.2.2.5 State specification element

The state specification element, Ⓕ, is an optional specification element, see ISO 10579.

8.2.3 Datum section

For datums and indications in the datum section, see ISO 5459.

8.3 Plane and feature indicators

Intersection plane indicators (Clause 13), orientation plane indicators (Clause 14), direction feature indicators (Clause 15) and collection plane indicators (Clause 16) can be indicated to the right of the tolerance indicator. If several of these are indicated, the intersection plane indicator shall be indicated nearest the tolerance indicator, followed by the orientation plane indicator or direction feature indicator (these two shall not be indicated together), and finally the collection plane indicator. There shall be no space between the tolerance indicator and the plane and feature indicator(s). When any of these indicators are indicated, the reference line can either be attached to the left hand end of the tolerance indicator or the right hand end of the last of the optional indicators.

© ISO 2017 – All rights reserved

Documents
Document Sharing Hub
Full document details: BS EN ISO 1101:2017

8.4 Indications adjacent to the tolerance indicator

8.4.1 General

There are three areas adjacent to the tolerance indicator where supplementary indications can be indicated, see Figure 46.

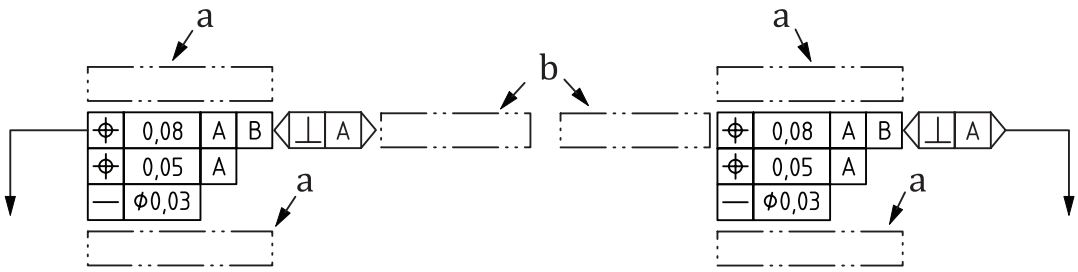

a Upper/lower adjacent indication area.

b Inline adjacent indication area.

NOTE While indications in the upper and lower adjacent indication areas mean the same, it is preferable to use the upper adjacent indication area, if practical.

Figure 46 — Adjacent indication areas

Indications that apply to all the tolerance indicators attached to the leader line as well as any dimensional specifications shall be indicated in the upper or lower adjacent indication area. The meaning of indications in the upper and lower adjacent indication areas is identical. Only one of these adjacent areas shall be used.

Indications that only apply to one tolerance indicator shall be indicated in an inline adjacent indication area for that tolerance indicator. Figure 46 shows the placement of inline adjacent indication areas, depending on which end of the tolerance indication the reference line is attached to.

When there is only one tolerance indicator, indications in the upper/lower adjacent indication areas and in the inline adjacent indication area mean the same. In this case, only one adjacent indication area shall be used and it is preferable to use the upper adjacent indication area, if practical.

Indications in the upper/lower adjacent indication areas shall be left aligned. Indications in the inline adjacent indication area shall be left aligned if it is to the right of the tolerance indicator and right aligned if it is to the left of the tolerance indicator.

8.4.2 Toleranced feature identifiers

If the toleranced feature is not the entire single feature indicated by the leader line and arrow attached to the tolerance indicator, an indication shall be given indicating the toleranced feature.

— ACS, if the toleranced feature is an intersection line or an intersection point defined as the intersection between an extracted integral feature and a section plane, or between an extracted median line and an intersection plane, see Figure 47. If a datum is indicated, the ACS specification element also modifies the datum feature to be in the corresponding cross-section. The cross-section applies perpendicular to the indicated datum or the situation straight line of the integral feature. The ACS specification element can only be applied to revolute surfaces, cylindrical surfaces or prismatic surfaces.

— Letters indicating locations on the feature, separated by the between symbol, if the toleranced feature is a restricted feature, see Figure 60 and Figure 63, or the width of the tolerance zone varies proportionally between the locations, see Figure 10 and Figure 14. For former practice, see A.3.2.

© ISO 2017 – All rights reserved
Documents
Document Sharing Hub
Full document details: BS EN ISO 1101:2017

If the specification applies to several toleranced features, *n*× or several leader lines can be used to identify the toleranced features, or they can be identified as given in 9.1.2. If the toleranced features are to be considered as one united feature, the UF specification element shall be added, see Figure 48, where a cylindrical feature is defined from a collection of curved features and Figure 55, where the entire workpiece is considered one united feature. In this case, the specification defines one tolerance zone for the united feature.

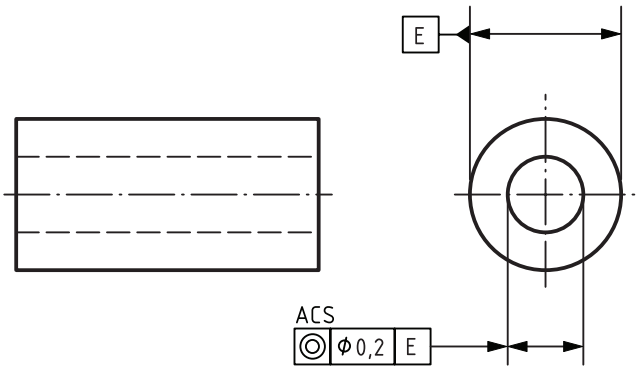

Figure 47 — Indication that the specification applies in any cross-section

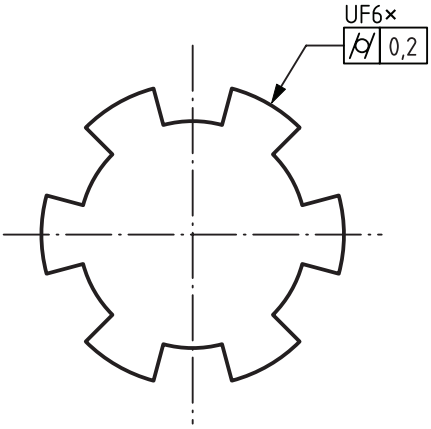

Figure 48 — Indication of a specification that applies to a united feature

Specifications for screw threads apply to the axis derived from the pitch cylinder by default. "MD" shall be indicated to designate the major diameter and "LD" to designate the minor diameter. Specifications and datums specified for splines and gears shall always designate the specific feature to which they apply, i.e. "PD" for pitch diameter, "MD" for major diameter or "LD" for minor diameter, see Figure 49.

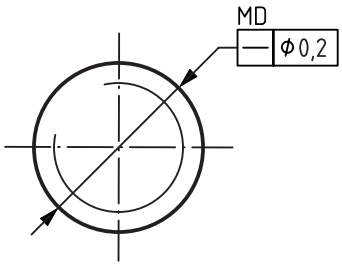

Figure 49 — Indication of a specification to the major diameter of a thread

NOTE The interpretation of geometrical specifications on the real workpiece for pitch diameter features, major diameter features and minor diameter features and features derived from these (e.g. the median line of the pitch diameter feature) are currently not well defined in GPS standards.

© ISO 2017 – All rights reserved

Documents
Document Sharing Hub
Full document details: BS EN ISO 1101:2017

8.4.3 Patterns

Additional information can be given in an adjacent indication area to identify the features to which the specification(s) applies, see Figure 64. This includes the number of patterns, the number of features within each pattern, identification of the features that belong to the pattern, and any size tolerances that apply to features of size in the pattern, to which the specification applies, as well as information about the extent of the feature(s) to which the specification applies.

For further information about patterns, see ISO 5458.

8.4.4 Adjacent indication sequence

If there is more than one indication in an adjacent indication area, the indications shall be given in the following sequence, with a space between each indication:

— indications of multiple toleranced features, e.g. *n*× or *n*× *m*×, see ISO 5458;

— dimensional tolerance indication, see ISO 14405-1 and ISO 286-1;

— "between" indication(s) unrelated to United Feature, see 9.1.4;

— UF for United Feature and *n*× for the number of features used to build each united feature, see 8.4.2, or "between" indications to define the extent of the united feature;

— ACS for sections, see 8.4.2;

— LD, PD or MD for threads and gears, see 8.4.2.

8.5 Stacked tolerance indications

If it is necessary to specify more than one geometrical characteristic for a feature, the requirements may be given in tolerance indicators one under the other for convenience (see the example in Figure 50).

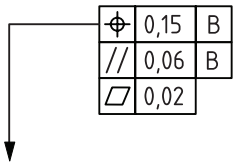

Figure 50 — Stacked tolerance indication

In this case, it is recommended that the tolerance indicators are arranged such that the tolerance values are shown in descending order from top to bottom, as shown in Figure 50.

In this case, the reference line shall be attached to the mid-point of the left-hand end or the right-hand end of one of the tolerance indicators, depending on space, not as an extension of the line between the tolerance indicators. This applies both in 2D and 3D.

8.6 Indication of drawing defaults

ISO defaults exist for the shape of the tolerance zone, reference feature association (8.2.2.3.1), characteristic (parameter) (8.2.2.3.2) and toleranced feature (pitch diameter) for screw threads (8.4.2).

The wide range of applications of this document makes it impossible to identify a filtering default that will be applicable for a large proportion of users.

Drawing defaults for filtering can be indicated in or near the title block, either as one default for all geometrical specifications, or as separate defaults for form, orientation and location, by writing "ISO 1101", followed by the relevant symbol from Table 6 and a ":", followed by the default filtering, see Annex C.

© ISO 2017 – All rights reserved
Documents
Document Sharing Hub
Full document details: BS EN ISO 1101:2017