BS EN ISO 11073-10406:2012

BSI Standards Publication

Health informatics — Personal health device communication

Part 10406: Device specialization — Basic electrocardiograph (ECG) (1- to 3-lead ECG)

bsi.

...making excellence a habit.™

Document Sharing Hub

Full document details: BS EN ISO 11073-10406:2012

National foreword

This British Standard is the UK implementation of EN ISO 11073-10406:2012. It is identical to ISO/IEEE 11073-10406:2012.

The UK participation in its preparation was entrusted to Technical Committee IST/35, Health informatics.

A list of organizations represented on this committee can be obtained on request to its secretary.

This publication does not purport to include all the necessary provisions of a contract. Users are responsible for its correct application.

© The British Standards Institution 2012.
Published by BSI Standards Limited 2012

ISBN 978 0 580 79444 5

ICS 35.240.80

Compliance with a British Standard cannot confer immunity from legal obligations.

This British Standard was published under the authority of the Standards Policy and Strategy Committee on 31 January 2013.

Amendments issued since publication

Date	Text affected

Documents
Document Sharing Hub

Full document details: BS EN ISO 11073-10406:2012

EUROPEAN STANDARD

NORME EUROPÉENNE

EUROPÄISCHE NORM

EN ISO 11073-10406

January 2013

ICS 35.240.80

English Version

Health informatics - Personal health device communication - Part 10406: Device specialization - Basic electrocardiograph (ECG) (1- to 3-lead ECG) (ISO/IEEE 11073-10406:2012)

Informatique de santé - Communication entre dispositifs de santé personnels - Partie 10406: Spécialisation des dispositifs - Électrocardiographe de base (ECG) (ECG 1 à 3) (ISO/IEEE 11073-10406:2012)

Medizinische Informatik - Kommunikation von Geräten für die persönliche Gesundheit - Teil 10406: Gerätespezifikation - Basiselektrokardiogramm (EKG) (EKG mit 1 bis 3 Ableitungen) (ISO/IEEE 11073-10406:2012)

This European Standard was approved by CEN on 30 November 2012.

CEN members are bound to comply with the CEN/CENELEC Internal Regulations which stipulate the conditions for giving this European Standard the status of a national standard without any alteration. Up-to-date lists and bibliographical references concerning such national standards may be obtained on application to the CEN-CENELEC Management Centre or to any CEN member.

This European Standard exists in three official versions (English, French, German). A version in any other language made by translation under the responsibility of a CEN member into its own language and notified to the CEN-CENELEC Management Centre has the same status as the official versions.

CEN members are the national standards bodies of Austria, Belgium, Bulgaria, Croatia, Cyprus, Czech Republic, Denmark, Estonia, Finland, Former Yugoslav Republic of Macedonia, France, Germany, Greece, Hungary, Iceland, Ireland, Italy, Latvia, Lithuania, Luxembourg, Malta, Netherlands, Norway, Poland, Portugal, Romania, Slovakia, Slovenia, Spain, Sweden, Switzerland, Turkey and United Kingdom.

EUROPEAN COMMITTEE FOR STANDARDIZATION
COMITÉ EUROPÉEN DE NORMALISATION
EUROPÄISCHES KOMITEE FÜR NORMUNG

Management Centre: Avenue Marnix 17, B-1000 Brussels

© 2012 CEN All rights of exploitation in any form and by any means reserved worldwide for CEN national Members.

Ref. No. EN ISO 11073-10406:2012: E

Documents
Document Sharing Hub

Full document details: BS EN ISO 11073-10406:2012

Foreword

This document (EN ISO 11073-10406:2012) has been prepared by Technical Committee ISO/TC 215 "Health informatics" in collaboration with Technical Committee CEN/TC 251 “Health informatics” the secretariat of which is held by NEN.

This European Standard shall be given the status of a national standard, either by publication of an identical text or by endorsement, at the latest by June 2013, and conflicting national standards shall be withdrawn at the latest by June 2013.

Attention is drawn to the possibility that some of the elements of this document may be the subject of patent rights. CEN [and/or CENELEC] shall not be held responsible for identifying any or all such patent rights.

According to the CEN/CENELEC Internal Regulations, the national standards organisations of the following countries are bound to implement this European Standard: Austria, Belgium, Bulgaria, Croatia, Cyprus, Czech Republic, Denmark, Estonia, Finland, Former Yugoslav Republic of Macedonia, France, Germany, Greece, Hungary, Iceland, Ireland, Italy, Latvia, Lithuania, Luxembourg, Malta, Netherlands, Norway, Poland, Portugal, Romania, Slovakia, Slovenia, Spain, Sweden, Switzerland, Turkey and the United Kingdom.

Endorsement notice

The text of ISO/IEEE 11073-10406:2012 has been approved by CEN as a EN ISO 11073-10406:2012 without any modification.

Documents
Document Sharing Hub

Full document details: BS EN ISO 11073-10406:2012

Contents

1. Overview ... 1
1.1 Scope ... 1
1.2 Purpose ... 1
1.3 Context ... 2

2. Normative references ... 2

3. Definitions, acronyms, and abbreviations ... 3
3.1 Definitions ... 3
3.2 Acronyms and abbreviations ... 3

4. Introduction to ISO/IEEE 11073 personal health devices ... 4
4.1 General ... 4
4.2 Introduction to ISO/IEEE 11073-20601 modeling constructs ... 4
4.3 Compliance with other standards ... 5

5. Basic ECG (1- to 3-lead ECG) device concepts and modalities ... 6
5.1 General ... 6
5.2 ECG waveform ... 6
5.3 R-R interval ... 6
5.4 Heart rate ... 7

6. Basic ECG (1- to 3-lead ECG) domain information model ... 7
6.1 Overview ... 7
6.2 Class extensions ... 7
6.3 Object instance diagram ... 7
6.4 Types of configuration ... 8
6.5 Profiles ... 9
6.6 Medical device system object ... 11
6.7 Numeric objects ... 15
6.8 Real-time sample array objects ... 18
6.9 Enumeration objects ... 19
6.10 PM-store objects ... 22
6.11 Scanner objects ... 29
6.12 Class extension objects ... 32
6.13 Basic ECG (1- to 3-lead ECG) information model extensibility rules ... 32

7. Basic ECG (1- to 3-lead ECG) service model ... 32
7.1 General ... 32
7.2 Object access services ... 32
7.3 Object access event report services ... 35

8. Basic ECG (1- to 3-lead ECG) communication model ... 35
8.1 Overview ... 35
8.2 Communications characteristics ... 36
8.3 Association procedure ... 36
8.4 Configuring procedure ... 38
8.5 Operating procedure ... 39
8.6 Time synchronization ... 40

© IEEE 2012 – All rights reserved

Documents
Document Sharing Hub
Full document details: BS EN ISO 11073-10406:2012

9. Test associations 40
9.1 Behavior with standard configuration 40
9.2 Behavior with extended configurations 41

10. Conformance 41
10.1 Applicability 41
10.2 Conformance specification 41
10.3 Levels of conformance 42
10.4 Implementation conformance statements 42

Annex A (informative) Bibliography 47

Annex B (normative) Any additional ASN.1 definitions 48

Annex C (normative) Allocation of identifiers 49

Annex D (informative) Message sequence examples 50

Annex E (informative) Protocol data unit examples 52

© IEEE 2012 – All rights reserved

Documents
Document Sharing Hub
Full document details: BS EN ISO 11073-10406:2012

Foreword

ISO (the International Organization for Standardization) is a worldwide federation of national standards bodies (ISO member bodies). The work of preparing International Standards is normally carried out through ISO technical committees. Each member body interested in a subject for which a technical committee has been established has the right to be represented on that committee. International organizations, governmental and non-governmental, in liaison with ISO, also take part in the work. ISO collaborates closely with the International Electrotechnical Commission (IEC) on all matters of electrotechnical standardization.

IEEE Standards documents are developed within the IEEE Societies and the Standards Coordinating Committees of the IEEE Standards Association (IEEE-SA) Standards Board. The IEEE develops its standards through a consensus development process, approved by the American National Standards Institute, which brings together volunteers representing varied viewpoints and interests to achieve the final product. Volunteers are not necessarily members of the Institute and serve without compensation. While the IEEE administers the process and establishes rules to promote fairness in the consensus development process, the IEEE does not independently evaluate, test, or verify the accuracy of any of the information or the soundness of any judgments contained in its standards.

The main task of technical committees is to prepare International Standards. Draft International Standards adopted by the technical committees are circulated to the member bodies for voting. Publication as an International Standard requires approval by at least 75 % of the member bodies casting a vote.

Attention is called to the possibility that implementation of this standard may require the use of subject matter covered by patent rights. By publication of this standard, no position is taken with respect to the existence or validity of any patent rights in connection therewith. ISO/IEEE is not responsible for identifying essential patents or patent claims for which a license may be required, for conducting inquiries into the legal validity or scope of patents or patent claims or determining whether any licensing terms or conditions provided in connection with submission of a Letter of Assurance or a Patent Statement and Licensing Declaration Form, if any, or in any licensing agreements are reasonable or non-discriminatory. Users of this standard are expressly advised that determination of the validity of any patent rights, and the risk of infringement of such rights, is entirely their own responsibility. Further information may be obtained from ISO or the IEEE Standards Association.

ISO/IEEE 11073-10406 was prepared by the IEEE 11073 Standards Comittee of the IEEE Engineering in Medicine and Biology Society (as IEEE Std 11073-10406-2011). It was adopted by Technical Committee ISO/TC 215, *Health informatics*, in parallel with its approval by the ISO member bodies, under the “fast-track procedure” defined in the Partner Standards Development Organization cooperation agreement between ISO and IEEE. IEEE is responsible for the maintenance of this document with participation and input from ISO member bodies.

ISO/IEEE 11073 consists of the following parts, under the general title *Health informatics — Personal health device communication* (text in parentheses gives a variant of subtitle):

— *Part 10101: (Point-of-care medical device communication) Nomenclature*

— *Part 10201: (Point-of-care medical device communication) Domain information model*

— *Part 10404: Device specialization — Pulse oximeter*

— *Part 10406: Device specialization — Basic electrocardiograph (ECG) (1- to 3-lead ECG)*

— *Part 10407: Device specialization — Blood pressure monitor*

— *Part 10408: Device specialization — Thermometer*

Documents
Document Sharing Hub

© IEEE 2012 – All rights reserved

Full document details: BS EN ISO 11073-10406:2012

— *Part 10415: Device specialization — Weighing scale*

— *Part 10417: Device specialization — Glucose meter*

— *Part 10420: Device specialization — Body composition analyzer*

— *Part 10421: Device specialization — Peak expiratory flow monitor (peak flow)*

— *Part 10471: Device specialization — Independant living activity hub*

— *Part 10472: Device specialization — Medication monitor*

— *Part 20101: (Point-of-care medical device communication) Application profiles — Base standard*

— *Part 20601: Application profile — Optimized exchange protocol*

— *Part 30200: (Point-of-care medical device communication) Transport profile — Cable connected*

— *Part 30300: (Point-of-care medical device communication) Transport profile — Infrared wireless*

— *Part 30400: (Point-of-care medical device communication) Interface profile — Cabled Ethernet*

— *Part 90101: (Point-of-care medical device communication) Analytical instruments — Point-of-care test*

— *Part 91064: (Standard communication protocol) Computer-assisted electrocardiography*

— *Part 92001: (Medical waveform format) — Encoding rules [Technical Specification]*

© IEEE 2012 – All rights reserved
Documents
Document Sharing Hub
Full document details: BS EN ISO 11073-10406:2012

Introduction

This introduction is not part of IEEE Std 11073-10406-2011, Health informatics—Personal health device communication—Part 10406: Device specialization—Basic electrocardiograph (ECG) (1- to 3-lead ECG).

Within the context of the ISO/IEEE 11073 family of standards for device communication, this standard establishes a normative definition of the communication between personal basic electrocardiograph (ECG) devices and managers (e.g., cell phones, personal computers, personal health appliances, and set top boxes) in a manner that enables plug-and-play interoperability. It leverages appropriate portions of existing standards including ISO/IEEE 11073 terminology and IEEE 11073-20601 information models. It specifies the use of specific term codes, formats, and behaviors in telehealth environments restricting optionality in base frameworks in favor of interoperability. This standard defines a common core of communication functionality for personal telehealth basic ECG (1- to 3-lead ECG) devices. Monitoring ECG devices are distinguished from diagnostic ECG equipment with respect to including support for wearable ECG devices, limiting the number of leads supported by the equipment to three, and not requiring the capability of annotating or analyzing the detected electrical activity to determine known cardiac phenomena. This standard is consistent with the base framework and allows multifunction implementations by following multiple device specializations (e.g., ECG and respiration rate).

© IEEE 2012 – All rights reserved

Documents
Document Sharing Hub
Full document details: BS EN ISO 11073-10406:2012

Health informatics — Personal health device communication —

Part 10406:
Device specialization — Basic electrocardiograph (ECG) (1- to 3-lead ECG)

IMPORTANT NOTICE: This standard is not intended to ensure safety, security, health, or environmental protection. Implementers of the standard are responsible for determining appropriate safety, security, environmental, and health practices or regulatory requirements.

This IEEE document is made available for use subject to important notices and legal disclaimers. These notices and disclaimers appear in all publications containing this document and may be found under the heading "Important Notice" or "Important Notices and Disclaimers Concerning IEEE Documents." They can also be obtained on request from IEEE or viewed at http://standards.ieee.org/IPR/disclaimers.html.

1. Overview

1.1 Scope

Within the context of the ISO/IEEE 11073 family of standards for device communication, this standard establishes a normative definition of the communication between personal basic electrocardiograph (ECG) devices and managers (e.g., cell phones, personal computers, personal health appliances, and set top boxes) in a manner that enables plug-and-play interoperability. It leverages appropriate portions of existing standards including ISO/IEEE 11073 terminology and IEEE Std 11073-20601 information models. It specifies the use of specific term codes, formats, and behaviors in telehealth environments restricting optionality in base frameworks in favor of interoperability. This standard defines a common core of communication functionality for personal telehealth basic ECG (1- to 3-lead ECG) devices. Monitoring ECG devices are distinguished from diagnostic ECG equipment with respect to including support for wearable ECG devices, limiting the number of leads supported by the equipment to three, and not requiring the capability of annotating or analyzing the detected electrical activity to determine known cardiac phenomena. This standard is consistent with the base framework and allows multifunction implementations by following multiple device specializations (e.g., ECG and respiration rate).

1.2 Purpose

This standard addresses a need for an openly defined, independent standard for controlling information exchange to and from personal health devices and managers (e.g., cell phones, personal computers, personal health appliances, and set top boxes). Interoperability is key to growing the potential market for these devices and enabling people to be better informed participants in the management of their health.

© IEEE 2012 – All rights reserved

Documents
Document Sharing Hub
Full document details: BS EN ISO 11073-10406:2012

1.3 Context

See IEEE Std 11073-20601a-2010[1] for an overview of the environment within which this standard is written.

This standard defines the device specialization for the basic ECG (1- to 3-lead ECG), being a specific agent type, and it provides a description of the device concepts, its capabilities, and its implementation according to this standard.

This standard is based on IEEE Std 11073-20601a™-2010 and ISO/IEEE 11073-20601:2010, which in turn draw information from both ISO/IEEE 11073-10201:2004 [B7][2] and ISO/IEEE 11073-20101:2004 [B8]. The medical device encoding rules (MDERs) used within this standard are fully described in ISO/IEEE 11073-20601:2010.

This standard reproduces relevant portions of the nomenclature found in ISO/IEEE 11073-10101:2004 0 and adds new nomenclature codes for the purposes of this standard. Among this standard, ISO/IEEE 11073-20601:2010, and IEEE Std 11073-20601a-2010, all required nomenclature codes for implementation are documented.

NOTE 1—IEEE Std 11073-20601a-2010 is an amendment to ISO/IEEE 11073-20601:2010. It contains new material and corrections and does not copy the content of ISO/IEEE 11073-20601:2010. Throughout this standard, a reference to IEEE Std 11073-20601a-2010 refers to the document that is obtained after applying this new material and corrections to ISO/IEEE 11073-20601:2010.[3]

NOTE 2—In this standard, ISO/IEEE 11073-104zz is used to refer to the collection of device specialization standards that utilize IEEE Std 11073-20601a-2010, where zz can be any number from 01 to 99, inclusive.

2. Normative references

The following referenced documents are indispensable for the application of this document (i.e., they must be understood and used, so that each referenced document is cited in text and its relationship to this document is explained). For dated references, only the edition cited applies. For undated references, the latest edition of the referenced document (including any amendments or corrigenda) applies.

IEEE Std 11073-20601a™-2010, Health informatics—Personal health device communication—Application profile—Optimized Exchange Protocol—Amendment 1.[4,5]

ISO/IEEE 11073-20601:2010, Health informatics—Personal health device communication—Application profile—Optimized Exchange Protocol.[6]

See Annex A for all informative material referenced by this standard.

[1] Information on references can be found in Clause 2.
[2] The numbers in brackets correspond to those of the bibliography in Annex A.
[3] Notes in text, tables, and figures are given for information only and do not contain requirements needed to implement the standard.
[4] The IEEE standards or products referred to in this clause are trademarks of the Institute of Electrical and Electronics Engineers, Inc.
[5] IEEE publications are available from the Institute of Electrical and Electronics Engineers, 445 Hoes Lane, Piscataway, NJ 08854-4141, USA (http://standards.ieee.org/).
[6] ISO/IEEE publications are available from the ISO Central Secretariat, 1, ch. de la Voie-Creuse, Case postale 56, CH-1211, Geneva 20, Switzerland (http://www.iso.ch/). ISO/IEEE publications are also available in the United States from the Institute of Electrical and Electronics Engineers, 445 Hoes Lane, Piscataway, NJ 08854-4141, USA (http://standards.ieee.org/).

© IEEE 2012 – All rights reserved
Documents
Document Sharing Hub
Full document details: BS EN ISO 11073-10406:2012

3. Definitions, acronyms, and abbreviations

3.1 Definitions

For the purposes of this document, the following terms and definitions apply. The *IEEE Standards Dictionary: Glossary of Terms & Definitions* should be consulted for terms not defined in this clause.[7]

3.1.1 agent: A node that collects and transmits personal health data to an associated manager.

3.1.2 class: In object-oriented modeling, it describes the attributes, methods, and events that objects instantiated from the class utilize.

3.1.3 device: A term used to refer to a physical apparatus implementing either an agent or a manager role.

3.1.4 electrode: An electrical sensor in contact with a specified part of the body. Two or more electrodes are used to detect heart action voltage. *See*: **lead**.

3.1.5 handle: An unsigned 16-bit number that is locally unique and identifies one of the object instances within an agent.

3.1.6 lead: Commonly refers to two different things: It may be used to refer to the combination of an electrode and associated lead wire, used for a certain ECG recording. Alternatively, it may be used to refer to the signal obtained by tracing the voltage between two electrodes or linear combinations thereof. The latter definition is used throughout this standard.

3.1.7 lead wire: A cable connected between an electrode and the agent device.

3.1.8 manager: A node receiving data from one or more agent systems. Some examples of managers include a cellular phone, health appliance, set top box, or computer system.

3.1.9 obj-handle: *See:* **handle.**

3.1.10 object: In object-oriented modeling, a particular instantiation of a class. The instantiation realizes attributes, methods, and events from the class.

3.1.11 personal health device: A device used in personal health applications.

3.1.12 personal telehealth device: *See:* **personal health device.**

3.2 Acronyms and abbreviations

APDU	application protocol data unit
ASN.1	Abstract Syntax Notation One
DIM	domain information model
ECG	electrocardiogram or electrocardiograph
EKG	elektrokardiogramm (German)
EUI-64	extended unique identifier (64 bits)
ICS	implementation conformance statements

[7] *The IEEE Standards Dictionary: Glossary of Terms & Definitions* is available at http://shop.ieee.org/.

© IEEE 2012 – All rights reserved

Documents
Document Sharing Hub
Full document details: BS EN ISO 11073-10406:2012

MDC	medical device communication
MDER	medical device encoding rules
MDS	medical device system
MOC	managed object class
PDU	protocol data unit
PHD	personal health device
RT-SA	real-time sample array
VMO	virtual medical object
VMS	virtual medical system

4. Introduction to ISO/IEEE 11073 personal health devices

4.1 General

This standard and the remainder of the series of ISO/IEEE 11073 personal health device (PHD) standards fit in the larger context of the ISO/IEEE 11073 series of standards. The full suite of standards enables agents to interconnect and interoperate with managers and with computerized health-care information systems. See IEEE Std 11073-20601a-2010 for a description of the guiding principles for this series of ISO/IEEE 11073 Personal Health Device standards.

IEEE Std 11073-20601a-2010 supports the modeling and implementation of an extensive set of personal health devices. This standard defines aspects of the basic ECG (1- to 3-lead ECG) device. It describes all aspects necessary to implement the application layer services and data exchange protocol between an ISO/IEEE 11073 PHD basic ECG (1- to 3-lead ECG) agent and a manager. This standard defines a subset of the objects and functionality contained in IEEE Std 11073-20601a-2010 and extends and adds definitions where appropriate. All new definitions are given in Annex B in Abstract Syntax Notation One (ASN.1). Nomenclature codes referenced in this standard, which are not defined in IEEE Std 11073-20601a-2010, are normatively defined in Annex C.

4.2 Introduction to ISO/IEEE 11073-20601 modeling constructs

4.2.1 General

The ISO/IEEE 11073 series of standards, and in particular IEEE Std 11073-20601a-2010, is based on an object-oriented systems management paradigm. The overall system model is divided into three principal components: the domain information model (DIM), the service model, and the communication model. See IEEE Std 11073-20601a-2010 for a detailed description of the modeling constructs.

4.2.2 Domain information model

The DIM is a hierarchical model that describes an agent as a set of objects. These objects and their attributes represent the elements that control behavior and report on the status of the agent and data that an agent can communicate to a manager. Communication between the agent and the manager is defined by the application protocol in the IEEE Std 11073-20601a-2010.

© IEEE 2012 – All rights reserved
Documents
Document Sharing Hub
Full document details: BS EN ISO 11073-10406:2012

4.2.3 Service model

The service model defines the conceptual mechanisms for the data exchange services. Such services are mapped to messages that are exchanged between the agent and the manager. Protocol messages within the ISO/IEEE 11073 series of standards are defined in ASN.1. The messages defined in IEEE Std 11073-20601a-2010 can coexist with messages defined in other standard application profiles defined in the ISO/IEEE 11073 series of standards.

4.2.4 Communication model

In general, the communication model supports the topology of one or more agents communicating over logical point-to-point connections to a single manager. For each logical point-to-point connection, the dynamic system behavior is defined by a connection state machine as specified in IEEE Std 11073-20601a-2010.

4.2.5 Implementing the models

An agent implementing this standard shall implement all mandatory elements of the information, service, and communication models as well as all conditional elements where the condition is met. The agent should implement the recommended elements, and it may implement any combination of the optional elements. A manager implementing this standard shall utilize at least one of the mandatory, conditional, recommended, or optional elements. In this context, “utilize” means to use the element as part of the primary function of the manager device. For example, a manager whose primary function is to display data would need to display a piece of data in the element in order to utilize it.

4.3 Compliance with other standards

Devices that comply with this standard may also be required to comply with other domain- and device-specific standards that supersede the requirements of this standard with respect to issues including safety, reliability, and risk management. A user of this standard is expected to be familiar with all other such standards that apply and to comply with any higher specifications thus imposed. Typically, medical devices will comply with the IEC 60601-1:2005 0 base standards with respect to electrical and mechanical safety and any device-specific standard as might be defined in the IEC 60601-2 [B2] series of standards. Software aspects may apply through standards such as IEC 62304:2006/EN 62304:2006 [B3]. Devices that comply with this standard implement higher layers of network software and utilize lower layers as appropriate to the application. The requirements on performance of such applications and conformance are defined elsewhere and are outside the scope of this standard. Moreover, the use of any medical equipment is subject to risk assessment and risk management appropriate to the application. Some relevant examples are ISO 14971:2007 [B5] and IEC 80001-1:2010 [B4]. The requirements of such risk assessment and risk management and conformance are outside the scope of this standard.

© IEEE 2012 – All rights reserved

Documents
Document Sharing Hub
Full document details: BS EN ISO 11073-10406:2012

5. Basic ECG (1- to 3-lead ECG) device concepts and modalities

5.1 General

This clause presents the general concepts of basic ECG (1- to 3-lead ECG) devices. In general, an ECG device with associated lead wires and electrodes measures the electrical activity of the heart. More precisely, it measures the electrical potential differences between electrodes placed on the person's body, reflecting the sum of the electrical activities of muscle fibers. These electrical activities are related to the myocardial muscle but also include artifacts caused by electrical activities of other muscle fibers after movement. In the context of personal health devices in this family of standards, a basic ECG (1- to 3-lead ECG) is used for the purpose of acquiring and recording 1 to 3 channel (leads) electrocardiographic waveforms or analyzing the acquired signals to measure heart rate.

The electrical potential is measured by means of a system of conducting wires attached to a person using electrodes. The electrodes are placed on specific locations on the surface of the person's body. There are different lead measurement systems for placing the electrodes on the person's body.

5.2 ECG waveform

ECG waveforms represent a continuous stream of measured electrical potential differences within a certain time period. ECG waveforms are typically used for cardiac rhythm monitoring.

5.3 R-R interval

Figure 1 illustrates the basic ECG signal and specific waveforms that may occur, for example, during atrial depolarization (P wave), ventricular depolarization (QRS complex), and ventricular repolarization (ST-T wave). The R-R interval (interbeat interval) is an instantaneous measurement defined as the time between the maximums of two consecutive R-waves (early ventricular depolarization), and it is typically indicated in milliseconds or an internal oscillator count. The latter is used in order to simplify implementations or to support higher accuracy by avoiding round off errors and is referred to as ticks and defined as ticks per second in this standard. Conceptually the R-R interval measurement is implemented by means of a detector that registers the time instant of each individual R peak and subsequently calculates the interval in between them.

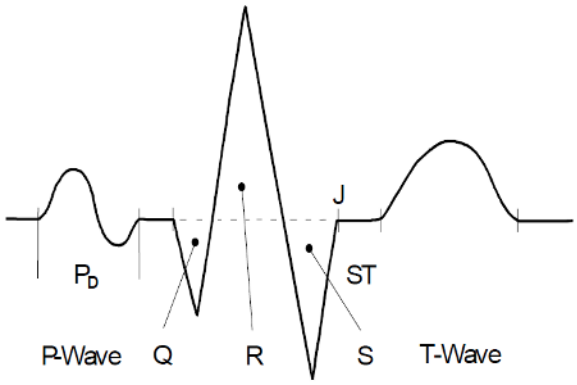

Figure 1—Basic form of ECG signal

© IEEE 2012 – All rights reserved
Documents
Document Sharing Hub
Full document details: BS EN ISO 11073-10406:2012

5.4 Heart rate

Heart rate is defined as the number of heartbeats per unit of time. Typically, this value is quoted as beats per minute, although often a period less than 1 min is used to determine the number of beats that have occurred, and the value is normalized. A heart rate measurement based on a single beat interval is termed the instantaneous heart rate. The instantaneous heart rate is defined as the inverse of a single R-R value, subject to a proper normalization factor accounting for the conversion from beats per millisecond to beats per minute. The instantaneous heart rate is often fluctuating and is therefore filtered (averaged) reducing higher frequency content for the purposes of display.

6. Basic ECG (1- to 3-lead ECG) domain information model

6.1 Overview

This clause describes the domain information model of the basic ECG (1- to 3-lead ECG).

6.2 Class extensions

In this standard, no class extensions are defined with respect to IEEE Std 11073-20601a-2010.

6.3 Object instance diagram

The metric object instance diagram of the basic ECG (1- to 3-lead ECG) domain information model, defined for the purposes of this standard, is shown in Figure 2.

The objects of the DIM, as shown in Figure 2, are described in 6.6 through 6.11. This includes the medical device system (MDS) object (see 6.6), the numeric objects (see 6.7), the RT-SA objects (see 6.8), the enumeration objects (see 6.9), the PM-store objects (see 6.10), and the scanner objects (see 6.11). See 6.13 for rules for extending the basic ECG (1- to 3-lead ECG) information model beyond elements as described in this standard. Each clause that describes an object of the basic ECG (1- to 3-lead ECG) contains the following information:

— The nomenclature code used to identify the class of the object. One example where this code is used is the configuration event, where the object class is reported for each object. This allows the manager to determine whether the class of the object being specified is a numeric, real-time sample array, enumeration, scanner, or PM-store class.

— The attributes of the object. Each object has attributes that represent and convey information on the physical device and its data sources. Each object has a Handle attribute that identifies the object instance within an agent. Attribute values are accessed and modified using methods such as GET and SET. Attribute types are defined using ASN.1. The ASN.1 definitions for new attribute types specific to this standard are in Annex B, and the ASN.1 definitions for existing attribute types referenced in this standard are in IEEE Std 11073-20601a-2010.

— The methods available on the object.

— The potential events generated by the object. The data are sent to the manager using events.

— The available services such as getting or setting attributes.

© IEEE 2012 – All rights reserved

Documents
Document Sharing Hub
Full document details: BS EN ISO 11073-10406:2012

The attributes for each class are defined in tables that specify the name of the attribute, its value, and its qualifier. The qualifiers mean: M — Attribute is Mandatory, C — Attribute is Conditional and depends on the condition stated in the Remark or Value column (if IEEE Std 11073-20601a-2010 is referenced, then it contains the conditions), R — Attribute is Recommended, NR — Attribute is Not Recommended, and O — Attribute is Optional. Mandatory attributes shall be implemented by an agent. Conditional attributes shall be implemented if the condition applies and may be implemented otherwise. Recommended attributes should be implemented by the agent. Not recommended attributes should not be implemented by the agent. Optional attributes may be implemented by the agent. For attributes with qualifiers set to R or NR, underlying requirements stated in the Remark and Value column in IEEE Std 11073-20601a-2010 shall be followed.

The attributes can be either static, meaning that they shall remain unchanged after the configuration is agreed upon, or dynamic, meaning that the attribute may change at some point after configuration.

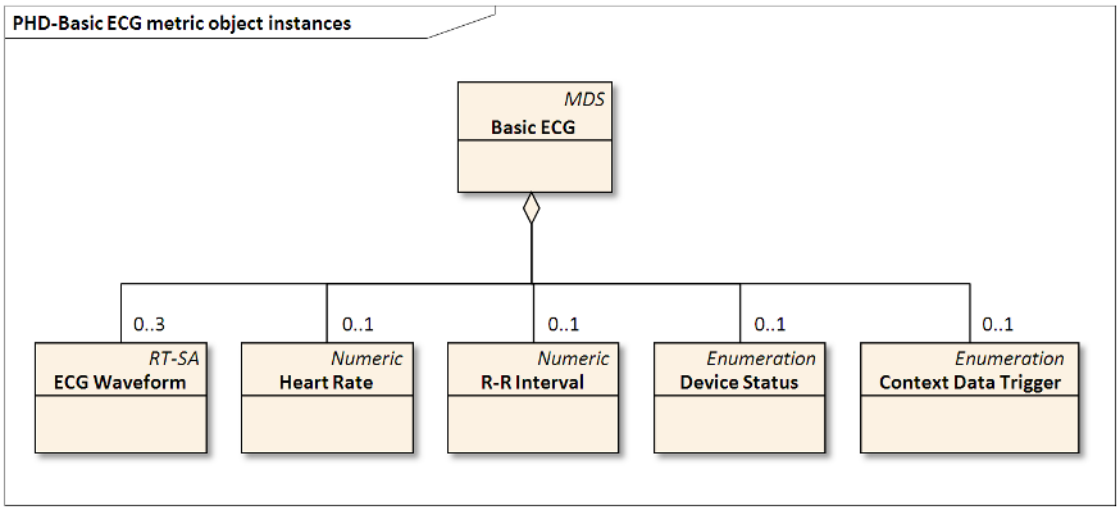

Figure 2—Basic ECG (1- to 3-lead ECG)—domain information model

6.4 Types of configuration

6.4.1 General

As specified in IEEE Std 11073-20601a-2010, there are two styles of configuration available. Subclauses 6.4.2 and 6.4.3 briefly introduce standard and extended configurations.

6.4.2 Standard configuration

Standard configurations are defined in the IEEE 11073-104zz specializations (such as this standard) and are assigned a well-known identifier (Dev-Configuration-Id). The usage of a standard configuration is negotiated at association time between the agent and the manager. If the manager recognizes and selects to operate using the configuration, then the agent can send measurements immediately. If the manager does not recognize the configuration, the agent provides the configuration prior to transmitting measurement information. The DIM of the standard configuration defined in this standard is described in 6.5.3.

© IEEE 2012 – All rights reserved
Documents
Document Sharing Hub
Full document details: BS EN ISO 11073-10406:2012

6.4.3 Extended configuration

In extended configurations, the agent's configuration is not predefined in a standard. The agent determines the objects, attributes, and values that will be used in a configuration and assigns a configuration identifier. When the agent associates with a manager, an acceptable configuration is negotiated. Typically, the manager does not recognize the agent's configuration on the first connection, so the manager responds that the agent needs to send its configuration information as a configuration event report. If, however, the manager recognizes the configuration, either because it was preloaded in some way or the agent had previously associated with the manager, then the manager responds that the configuration is known and no further configuration information needs to be sent.

6.5 Profiles

6.5.1 General

A profile further constrains the objects, services, and communication model of a specialization. By profiling the device specialization, the standard provides more guidance on the specific mandatory objects that shall be implemented, the objects that are optional, and the objects that are not required. This standard defines two profiles, the simple ECG profile (see 6.5.2) and the heart rate profile (see 6.5.3). A basic ECG (1- to 3-lead ECG) device shall implement at least one of these two profiles.

6.5.2 Simple ECG profile

The metric object instance diagram of the simple ECG profile domain information model is shown in Figure 3. A basic ECG (1- to 3-lead ECG) device implementing the simple ECG profile shall implement 1 to 3 ECG waveform RT-SA objects. For the simple ECG profile, currently no standard configuration is defined.

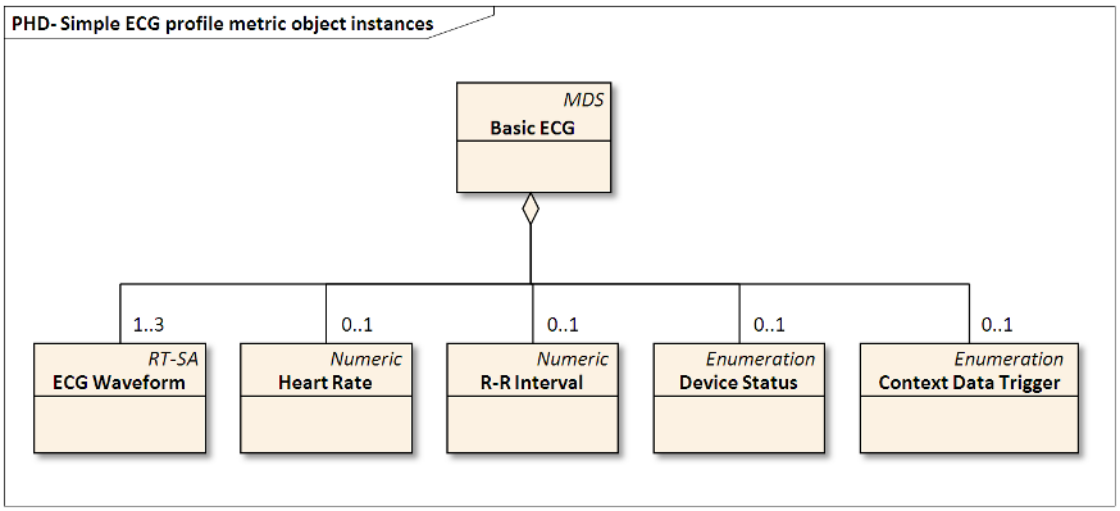

Figure 3—Simple ECG profile—metric objects

© IEEE 2012 – All rights reserved

Documents
Document Sharing Hub
Full document details: BS EN ISO 11073-10406:2012

6.5.3 Heart rate profile

The metric object instance diagram of the heart rate profile domain information model is shown in Figure 4. The heart rate numeric object shall be supported by a basic ECG (1- to 3-lead ECG) device implementing the heart rate profile.

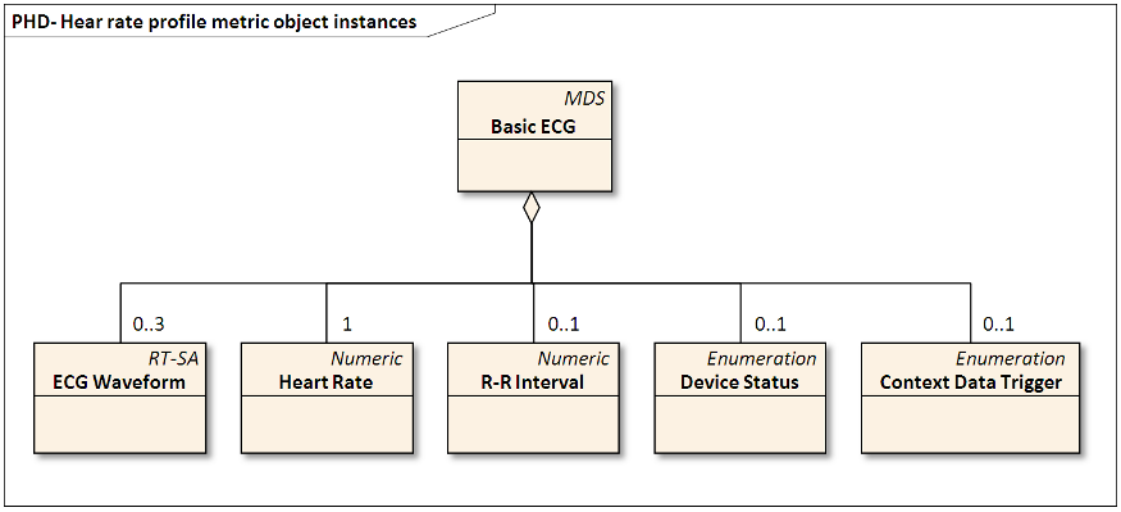

Figure 4—Heart rate profile—metric objects

If and only if an agent supports the heart rate profile, it shall support the standard configuration with Dev-Configuration-ID value 0x258. The DIM for this standard configuration contains a single heart rate numeric object. The corresponding metric object instance diagram is shown in Figure 5.

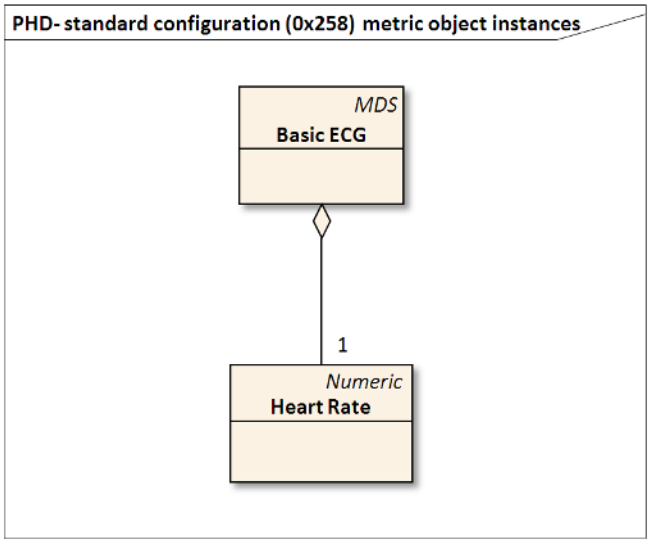

Figure 5—Heart rate profile—standard configuration (0x258)—metric objects

© IEEE 2012 – All rights reserved
Documents
Document Sharing Hub
Full document details: BS EN ISO 11073-10406:2012

6.6 Medical device system object

6.6.1 MDS object attributes

Table 1 summarizes the attributes of the basic ECG (1- to 3-lead ECG) MDS object. The nomenclature code to identify the MDS class is MDC_MOC_VMS_MDS_SIMP.

Table 1—MDS object attributes

Attribute name	Value	Qual.
Handle	0	M
System-Type	Attribute not present. See IEEE Std 11073-20601a-2010.	NR
System-Type-Spec-List	Specialization value: {MDC_DEV_SPEC_PROFILE_ECG, 1} and Profile value: {MDC_DEV_SUB_SPEC_PROFILE_ECG, 1} or {MDC_DEV_SUB_SPEC_PROFILE_HR, 1}	M
System-Model	{"Manufacturer","Model"}	M
System-Id	Extended unique identifier (64-bits) (EUI-64)	M
Dev-Configuration-Id	Standard config: 0x0258 (600) Extended configs: 0x4000-0x7FFF	M
Attribute-Value-Map	See IEEE Std 11073-20601a-2010.	C
Production-Specification	See IEEE Std 11073-20601a-2010.	O
Mds-Time-Info	See IEEE Std 11073-20601a-2010.	C
Date-and-Time	See IEEE Std 11073-20601a-2010.	C
Base-Offset-Time	See IEEE Std 11073-20601a-2010.	C
Relative-Time	See IEEE Std 11073-20601a-2010.	C
HiRes-Relative-Time	See IEEE Std 11073-20601a-2010.	C
Date-and-Time-Adjustment	See IEEE Std 11073-20601a-2010.	C
Power-Status	*onBattery* or *onMains*	R
Battery-Level	See IEEE Std 11073-20601a-2010.	R
Remaining-Battery-Time	See IEEE Std 11073-20601a-2010.	R
Reg-Cert-Data-List	See IEEE Std 11073-20601a-2010.	O
Confirm-Timeout	See IEEE Std 11073-20601a-2010.	O
Tick-Resolution	See 6.6.2.	C

NOTE—See IEEE Std 11073-20601a-2010 for information on whether an attribute is static or dynamic.

In the response to a Get MDS Object command, only implemented attributes and their corresponding values are returned.

See IEEE Std 11073-20601a-2010 for descriptive explanations of the individual attributes as well as for information on attribute ID and attribute type.

If an agent implements multiple IEEE 11073-104zz specializations, System-Type-Spec-List is a list of type/version pairs, each referencing the respective device specialization and version of that specialization. For a basic ECG (1- to 3-lead ECG) agent, a specialization value of MDC_DEV_SPEC_PROFILE_ECG shall be included in the System-Type-Spec-List attribute as shown in Table 1. Additionally, the value(s) for the supported profile(s) shall be included in the System-Type-Spec-List attribute. The profile value for a basic ECG (1- to 3-lead ECG) agent supporting the simple ECG profile shall be set to MDC_DEV_ SUB_SPEC_PROFILE_ECG. The profile value for a basic ECG (1- to 3-lead ECG) agent supporting the heart rate profile shall be set to MDC_DEV_ SUB_SPEC_PROFILE_HR.

© IEEE 2012 – All rights reserved

Documents
Document Sharing Hub
Full document details: BS EN ISO 11073-10406:2012

The Dev-Configuration-Id attribute holds a locally unique 16-bit identifier that identifies the device configuration. For a basic ECG (1- to 3-lead ECG) agent with extended configuration, this identifier is chosen in the range of extended-config-start to extended-config-end (see IEEE Std 11073-20601a-2010) as shown in Table 1.

The agent sends the Dev-Configuration-Id during the Associating state (see 8.3) to identify its configuration for the duration of the association. If the manager already holds the configuration information relating to the Dev-Configuration-Id, it recognizes the Dev-Configuration-Id and the Configuring state (see 8.4) is skipped, and the agent and manager then enter the Operating state. If the manager does not recognize the Dev-Configuration-Id, the agent and manager enter the Configuring state.

6.6.2 Tick-Resolution attribute

The Tick-Resolution attribute specifies the resolution of the agent's internal oscillator and provides the context information when the corresponding Unit-Code attribute is equal to MDC_DIM_TICK, which is for optional use when measuring the R-R interval (see 6.7.3). Table 2 defines the Tick-Resolution attribute.

Table 2—Basic ECG (1- to 3-lead ECG) Tick-Resolution attribute

Attribute name	Attribute ID	Attribute type	Remark	Qualifiers
Tick-Resolution	MDC_ATTR_TICK_RES	FLOAT-Type	This attribute defines the resolution for the agent's internal oscillator (i.e., it specifies the number of ticks per second). If the agent implements the R-R interval object (see 6.6.3) and uses MDC_DIM_TICK for the corresponding Unit-Code attribute, the Tick-Resolution attribute shall be implemented.	Conditional Static

NOTE—The number of ticks per second is not necessarily an integer value but can be fractional.

6.6.3 MDS object methods

Table 3 defines the methods (actions) of the MDS object. These methods are invoked using the Action service. In Table 3, the Subservice type name column defines the name of the method; the Mode column defines whether the method is invoked as an unconfirmed action (i.e., roiv-cmip-action from IEEE Std 11073-20601a-2010) or a confirmed action (i.e., roiv-cmip-confirmed-action); the Subservice type (action-type) column defines the nomenclature code to use in the action-type field of an action request and response (see IEEE Std 11073-20601a-2010); the Parameters (action-info-args) column defines the associated ASN.1 data structure (see IEEE Std 11073-20601a-2010 for ASN.1 definitions) to use in the action message for the action-info-args field of the request; and the Results (action-info-args) column defines the structure to use in the action-info-args of the response.

Table 3—MDS object methods

Service	Subservice type name	Mode	Subservice type (action-type)	Parameters (action-info-args)	Results (action-info-args)
ACTION	Set-Time	Confirmed	MDC_ACT_SET_TIME	SetTimeInvoke	—
ACTION	Set-Base-Offset-Time	Confirmed	MDC_ACT_SET_BO_TIME	SetBOTimeInvoke	—

© IEEE 2012 – All rights reserved
Documents
Document Sharing Hub
Full document details: BS EN ISO 11073-10406:2012

Set-Time

This method allows the manager to set a real-time clock in the agent with the absolute time. The agent indicates whether the Set-Time command is valid using the mds-time-capab-set-clock bit in the Mds-Time-Info attribute (see IEEE Std 11073-20601a-2010).

If the agent supports the Absolute-Time-Stamp attribute, this method shall be implemented.

Set-Base-Offset-Time

This method allows the manager to set a real-time clock in the agent with the base time and offset. The agent indicates whether the Set-Base-Offset-Time command is valid using the mds-time-capab-set-clock bit in the Mds-Time-Info attribute (see IEEE Std 11073-20601a-2010).

If the agent supports the Base-Offset-Time-Stamp attribute, this method shall be implemented.

Agents following only this device specialization and no others shall send event reports using agent initiated measurement data transmission. Agents following this device specialization as well as others shall send event reports in the appropriate fashion. During the association procedure (see 8.3), data-req-mode-capab shall be set to the appropriate value for the event report style. As a result, the manager shall assume the basic ECG (1- to 3-lead ECG) agent does not support any of the MDS-Data-Request features (see IEEE Std 11073-20601a-2010 for additional information). Thus, implementation of the MDS-Data-Request method/action is not required in this standard and is not shown in Table 3.

6.6.4 MDS object events

Table 4 defines the events that can be sent by the basic ECG (1- to 3-lead ECG) MDS object.

Table 4—Basic ECG (1- to 3-lead ECG) MDS object events

Service	Subservice type name	Mode	Subservice type (event-type)	Parameters (event-info)	Results (event-reply-info)
EVENT REPORT	MDS-Configuration-Event	Confirmed	MDC_NOTI_CONFIG	ConfigReport	ConfigReport Rsp
	MDS-Dynamic-Data-Update-Var	Confirmed or unconfirmed	MDC_NOTI_SCAN_REPORT_VAR	ScanReportInfoVar	—
	MDS-Dynamic-Data-Update-Fixed	Confirmed or unconfirmed	MDC_NOTI_SCAN_REPORT_FIXED	ScanReportInfoFixed	—
	MDS-Dynamic-Data-Update-MP-Var	Confirmed or unconfirmed	MDC_NOTI_SCAN_REPORT_MP_VAR	ScanReportInfoMP Var	—
	MDS-Dynamic-Data-Update-MP-Fixed	Confirmed or unconfirmed	MDC_NOTI_SCAN_REPORT_MP_FIXED	ScanReportInfoMP Fixed	—

© IEEE 2012 – All rights reserved

Documents
Document Sharing Hub
Full document details: BS EN ISO 11073-10406:2012

— **MDS-Configuration-Event:**
This event is sent by the basic ECG (1- to 3-lead ECG) agent during the configuring procedure if the manager does not already know the basic ECG (1- to 3-lead ECG) agent's configuration from past associations or because the manager has not been implemented to recognize the configuration according to the basic ECG (1- to 3-lead ECG) device specialization. The event provides static information about the supported measurement capabilities of the basic ECG (1- to 3-lead ECG) agent.

— **MDS-Dynamic-Data-Update-Var:**
This event provides dynamic measurement data from the basic ECG (1- to 3-lead ECG) agent for the numeric and enumeration objects. These data are reported using a generic attribute list variable format. The event is sent as an unsolicited message by the agent (i.e., an agent-initiated measurement data transmission). See 8.5.3 for more information on unsolicited event reporting.

— **MDS-Dynamic-Data-Update-Fixed:**
This event provides dynamic measurement data from the basic ECG (1- to 3-lead ECG) agent for the numeric and enumeration objects. These data are reported in the fixed format defined by the Attribute-Value-Map attribute of the objects. The event is sent as an unsolicited message by the agent (i.e., an agent-initiated measurement data transmission). See 8.5.3 for more information on unsolicited event reporting.

— **MDS-Dynamic-Data-Update-MP-Var:**
This is the same as MDS-Dynamic-Data-Update-Var but allows inclusion of data from multiple people.

— **MDS-Dynamic-Data-Update-MP-Fixed:**
This is the same as MDS-Dynamic-Data-Update-Fixed but allows inclusion of data from multiple people.

NOTE—IEEE Std 11073-20601a-2010 requires that managers support all of the MDS Object Events listed above.

6.6.5 Other MDS services

6.6.5.1 GET service

A basic ECG (1- to 3-lead ECG) agent shall support the GET service, which is provided by the MDS object to retrieve the values of all implemented MDS object attributes. The GET service can be invoked as soon as the basic ECG (1- to 3-lead ECG) agent receives the Association Response and moves to the Associated state, including the Operating and Configuring substates.

The manager may request the MDS object attributes of the basic ECG (1- to 3-lead ECG) agent; in which case, the manager shall send the "Remote Operation Invoke | Get" message (see roiv-cmip-get in IEEE Std 11073-20601a-2010) with the reserved MDS handle value of 0. The basic ECG (1- to 3-lead ECG) agent shall report its MDS object attributes to the manager using the "Remote Operation Response | Get" message (see rors-cmip-get in IEEE Std 11073-20601a-2010). See Table 5 for a summary of the GET service including some message fields.

Table 5—Basic ECG (1- to 3-lead ECG) MDS object GET service

Service	Subservice type name	Mode	Subservice type	Parameters	Results
GET	<na>	<implied confirmed>	<na>	GetArgumentSimple = (obj-handle = 0), attribute-id-list *<optional>*	GetResultSimple = (obj-handle = 0), attribute-list

© IEEE 2012 – All rights reserved
Documents
Document Sharing Hub
Full document details: BS EN ISO 11073-10406:2012