BS EN ISO 11111-1:2016

Incorporating corrigendum October 2016

BSI Standards Publication

Textile machinery — Safety requirements

Part 1: Common requirements (ISO 11111-1:2016)

Documents
Document Sharing Hub

Full document details: BS EN ISO 11111-1:2016

National foreword

This British Standard is the UK implementation of EN ISO 11111-1:2016. It supersedes BS EN ISO 11111-1:2009 which is withdrawn.

The UK participation in its preparation was entrusted to Technical Committee TCI/33, Textile machinery.

A list of organizations represented on this committee can be obtained on request to its secretary.

This publication does not purport to include all the necessary provisions of a contract. Users are responsible for its correct application.

© The British Standards Institution 2016.
Published by BSI Standards Limited 2016

ISBN 978 0 580 96178 6

ICS 59.120.01

Compliance with a British Standard cannot confer immunity from legal obligations.

This British Standard was published under the authority of the Standards Policy and Strategy Committee on 30 June 2016.

Amendments/corrigenda issued since publication

Date	Text affected
30 November 2016	Annex ZA updated by CEN

Documents
Document Sharing Hub

Full document details: BS EN ISO 11111-1:2016

EUROPEAN STANDARD

NORME EUROPÉENNE

EUROPÄISCHE NORM

EN ISO 11111-1

June 2016

ICS 59.120.01

Supersedes EN ISO 11111-1:2009

English Version

Textile machinery - Safety requirements - Part 1: Common requirements (ISO 11111-1:2016)

Matériel pour l'industrie textile - Exigences de sécurité - Partie 1: Exigences communes (ISO 11111-1:2016)

Textilmaschinen - Sicherheitsanforderungen - Teil 1: Gemeinsame Anforderungen (ISO 11111-1:2016)

This European Standard was approved by CEN on 5 May 2016.

CEN members are bound to comply with the CEN/CENELEC Internal Regulations which stipulate the conditions for giving this European Standard the status of a national standard without any alteration. Up-to-date lists and bibliographical references concerning such national standards may be obtained on application to the CEN-CENELEC Management Centre or to any CEN member.

This European Standard exists in three official versions (English, French, German). A version in any other language made by translation under the responsibility of a CEN member into its own language and notified to the CEN-CENELEC Management Centre has the same status as the official versions.

CEN members are the national standards bodies of Austria, Belgium, Bulgaria, Croatia, Cyprus, Czech Republic, Denmark, Estonia, Finland, Former Yugoslav Republic of Macedonia, France, Germany, Greece, Hungary, Iceland, Ireland, Italy, Latvia, Lithuania, Luxembourg, Malta, Netherlands, Norway, Poland, Portugal, Romania, Slovakia, Slovenia, Spain, Sweden, Switzerland, Turkey and United Kingdom.

EUROPEAN COMMITTEE FOR STANDARDIZATION
COMITÉ EUROPÉEN DE NORMALISATION
EUROPÄISCHES KOMITEE FÜR NORMUNG

CEN-CENELEC Management Centre: Avenue Marnix 17, B-1000 Brussels

© 2016 CEN All rights of exploitation in any form and by any means reserved worldwide for CEN national Members.

Ref. No. EN ISO 11111-1:2016 E

Documents
Document Sharing Hub

Full document details: BS EN ISO 11111-1:2016

European foreword

This document (EN ISO 11111-1:2016) has been prepared by Technical Committee ISO/TC 72 "Textile machinery and accessories" in collaboration with Technical Committee CEN/TC 214 “Textile machinery and accessories” the secretariat of which is held by SNV.

This European Standard shall be given the status of a national standard, either by publication of an identical text or by endorsement, at the latest by December 2016, and conflicting national standards shall be withdrawn at the latest by December 2016.

Attention is drawn to the possibility that some of the elements of this document may be the subject of patent rights. CEN [and/or CENELEC] shall not be held responsible for identifying any or all such patent rights.

This document supersedes EN ISO 11111-1:2009.

This document has been prepared under a mandate given to CEN by the European Commission and the European Free Trade Association, and supports essential requirements of EU Directive(s).

For relationship with EU Directive(s), see informative Annex ZA, which is an integral part of this document.

According to the CEN-CENELEC Internal Regulations, the national standards organizations of the following countries are bound to implement this European Standard: Austria, Belgium, Bulgaria, Croatia, Cyprus, Czech Republic, Denmark, Estonia, Finland, Former Yugoslav Republic of Macedonia, France, Germany, Greece, Hungary, Iceland, Ireland, Italy, Latvia, Lithuania, Luxembourg, Malta, Netherlands, Norway, Poland, Portugal, Romania, Slovakia, Slovenia, Spain, Sweden, Switzerland, Turkey and the United Kingdom.

Endorsement notice

The text of ISO 11111-1:2016 has been approved by CEN as EN ISO 11111-1:2016 without any modification.

Documents
Document Sharing Hub

Full document details: BS EN ISO 11111-1:2016

Annex ZA
(informative)

Relationship between this European Standard and the Essential requirements of EU Directive 2006/42/EC aimed to be covered

This European Standard has been prepared under a Commission's standardization request M 396 (Machinery) to provide a means of conforming to essential requirements of the New Approach Directive 2006/42/EC on machinery.

Once this standard is cited in the Official Journal of the European Union under that Directive, compliance with the normative clauses of this standard given in Table ZA.1 confers, within the limits of the scope of this standard, a presumption of conformity with the corresponding essential requirements of that Directive and associated EFTA regulations.

Table ZA.1 — Correspondence between this European Standard and Annex I of Directive 2006/42/EC

Essential Requirements of Directive 2006/42/EC	Clause(s)/sub-clause(s) of this EN	Remarks/Notes
All essential requirements of Annex I are covered	All clauses are covered	IMPORTANT — Compliance with the requirements of ISO 11111-1 and all relevant machine specific parts of the ISO 11111- series is necessary to achieve presumption of conformity with the relevant essential requirements.

WARNING 1 Presumption of conformity stays valid only as long as a reference to this European Standard is maintained in the list published in the Official Journal of the European Union. Users of this standard should consult frequently the latest list published in the Official Journal of the European Union.

WARNING 2 Other Union legislation may be applicable to the product(s) falling within the scope of this standard.

Documents
Document Sharing Hub
Full document details: BS EN ISO 11111-1:2016

Contents

Page

Foreword ..... **v**
Introduction ..... **vi**
1 Scope **1**
2 Normative references **2**
3 Terms and definitions **4**
4 List of significant hazards **5**
5 Safety requirements and/or measures for frequently occurring hazards **6**
5.1 General 6
5.2 Safety requirements for the different phases of "life" of a machine 6
5.3 Risk reduction by design and safeguarding 6
5.3.1 Inherently safe design measures 6
5.3.2 Consideration of geometrical factors and physical aspects 6
5.3.3 Reduction of risks by safeguarding 6
5.4 Safety requirements for various hazards 8
5.4.1 General 8
5.4.2 Electrical hazards 8
5.4.3 Mechanical hazards 11
5.4.4 Static electricity 14
5.4.5 Fluid power systems and components 15
5.4.6 Extreme temperatures 15
5.4.7 Noise reduction 16
5.4.8 Lasers 16
5.4.9 Radiation 16
5.4.10 Materials and substances 17
5.4.11 Fire 17
5.4.12 Explosion 18
5.4.13 Ergonomics 18
5.5 Devices for special operation 19
5.6 Access to elevated operating positions and servicing points 20
5.7 Measures for the escape and rescue of trapped persons 20
5.8 Fitting of parts 20
6 Significant hazards and corresponding safety requirements and/or measures for certain machine elements and their combinations **21**
6.1 General 21
6.2 Drive and transmission enclosures 21
6.3 Particularly dangerous machine elements 21
6.4 Machine elements which normally do not require safeguarding 23
6.4.1 Low risk machine elements 23
6.4.2 Machine elements out of reach 23
6.5 Rollers 24
6.6 Rotating shafts 30
6.7 Wheels 30
6.7.1 Running wheels 30
6.7.2 Hand wheels 31
6.8 Doors and lids 32
6.8.1 General 32
6.8.2 Opening and closing 32
6.8.3 Locking and unlocking of doors or lids under pressure 32
6.8.4 Entry into machines, vessels or items of plant 33
6.9 Observation windows 34
6.10 Conveyors 34
6.11 Fans 35

AVA Documents
Document Sharing Hub

© ISO 2016 – All rights reserved

Full document details: BS EN ISO 11111-1:2016

6.12 Cutting devices ... 35
6.13 Working platforms and walkways on machines, work areas adjacent to tanks and pits ... 36
6.14 Radiators or burners for the direct heat treatment of yarn and fabric ... 37
6.15 Devices for steam heating of liquors ... 37
6.16 Liquor preparatory machinery incorporating stirrers ... 38
6.17 Dancing rollers ... 39
6.18 Batching devices ... 39
6.18.1 General Information ... 39
6.18.2 Surface-driven batcher ... 40
6.18.3 Centre batcher ... 42
6.18.4 Ascending batch winder ... 45
6.18.5 Equipment for automatic process material change on batching devices ... 46
6.19 Mangles ... 48
6.20 Pilers and plaiters ... 49
6.21 Automatic machines and equipment ... 49
6.21.1 General ... 49
6.21.2 Automatic guards ... 49
6.21.3 Mobile machines, handling devices, operational parts ... 50
6.21.4 Mobile machines and handling devices which could leave their defined path ... 51
6.21.5 Floor-mounted and overhead rails (tracks) ... 51
6.21.6 Overhead transport of process material ... 52
6.22 Complex installations ... 52

7 Verification of the compliance with the safety requirements and/or measures ... 53

8 Information concerning machine use ... 53
8.1 Signals and warning devices ... 53
8.2 Accompanying documents (in particular: instruction handbook) ... 53
8.3 Marking ... 54

Annex A (normative) **Specifications ... 55**

Annex B (normative) **Hot surfaces ... 57**

Annex C (normative) **Verification methods ... 59**

Annex D (normative) **Nip between roller and fabric ... 70**

Annex E (informative) **List of machines and equipment used in the textile industry but not within the scope of this part of ISO 11111 ... 71**

Bibliography ... 72

© ISO 2016 – All rights reserved
Documents
Document Sharing Hub
Full document details: BS EN ISO 11111-1:2016

Foreword

ISO (the International Organization for Standardization) is a worldwide federation of national standards bodies (ISO member bodies). The work of preparing International Standards is normally carried out through ISO technical committees. Each member body interested in a subject for which a technical committee has been established has the right to be represented on that committee. International organizations, governmental and non-governmental, in liaison with ISO, also take part in the work. ISO collaborates closely with the International Electrotechnical Commission (IEC) on all matters of electrotechnical standardization.

The procedures used to develop this document and those intended for its further maintenance are described in the ISO/IEC Directives, Part 1. In particular the different approval criteria needed for the different types of ISO documents should be noted. This document was drafted in accordance with the editorial rules of the ISO/IEC Directives, Part 2 (see www.iso.org/directives).

Attention is drawn to the possibility that some of the elements of this document may be the subject of patent rights. ISO shall not be held responsible for identifying any or all such patent rights. Details of any patent rights identified during the development of the document will be in the Introduction and/or on the ISO list of patent declarations received (http://www.iso.org/patents).

Any trade name used in this document is information given for the convenience of users and does not constitute an endorsement.

For an explanation on the meaning of ISO specific terms and expressions related to conformity assessment, as well as information about ISO's adherence to the WTO principles in the Technical Barriers to Trade (TBT), see the following URL: Foreword - Supplementary information.

The committee responsible for this document is ISO/TC 72, *Textile machinery and accessories*, Subcommittee SC 8, *Safety requirements for textile machinery*.

This third edition cancels and replaces the second edition (ISO 11111-1:2009), which has been technically revised.

ISO 11111 consists of the following parts, under the general title *Textile machinery — Safety requirements*:

— *Part 1: Common requirements*

— *Part 2: Spinning preparatory and spinning machines*

— *Part 3: Nonwoven machinery*

— *Part 4: Yarn processing, cordage and rope manufacturing machinery*

— *Part 5: Preparatory machinery to weaving and knitting*

— *Part 6: Fabric manufacturing machinery*

— *Part 7: Dyeing and finishing machinery*

© ISO 2016 – All rights reserved

Documents
Document Sharing Hub
Full document details: BS EN ISO 11111-1:2016

Introduction

ISO 11111-1 to ISO 11111-7 were prepared simultaneously by ISO/TC 72 and CEN/TC 214, and adopted under the Vienna Agreement in order to obtain identical standards on technical safety requirements for the design and construction of textile machinery.

ISO 11111 as a whole is intended for use by any person concerned with the safety of textile machinery, for example, textile machinery designers, manufacturers and systems integrators. It is also of interest to users of textile machines and safety experts.

This part of ISO 11111 is a type C standard as stated in ISO 12100. The various parts of ISO 11111 deal with significant hazards generated by machines used in the textile industry. The machinery concerned and the extent to which hazards are covered are indicated in the scope of this part of ISO 11111.

When provisions of this type C standard are different from those which are stated in type A or B standards, the provisions of this type C standard take precedence.

For machines or machine equipment not dealt with in the relevant parts of ISO 11111, the designer performs a risk assessment according to ISO 12100 and provides means for reducing the risk from significant hazards. These risk reduction measures that need to be identified by the designer/manufacturer of the machinery by risk assessment are outside the scope of this standard.

This part of ISO 11111 contains a summary of safety requirements and/or measures for frequently occurring hazards of textile machinery (see Clause 5) which apply whenever referred to in this, or the other parts of ISO 11111.

Significant hazards and corresponding safety requirements and/or measures for certain machine elements (e.g. rollers) and their combination of textile machines are also described (see Clause 6).

The various parts of ISO 11111 address significant hazards and corresponding safety requirements and/or measures for specific types of textile machines. As far as possible, these are treated by way of reference to Clauses 5 and 6 and other cross-references (see general safety requirements), thus reducing considerably the volume by avoiding many repetitions. The standard for a specific textile machine will normally consist of this part of ISO 11111 and the specific part relevant to that machine. ISO 11111-2 to ISO 11111-7 may also contain exceptions or additions to the requirements given in this part of ISO 11111 (see specific safety requirements).

© ISO 2016 – All rights reserved
Documents
Document Sharing Hub
Full document details: BS EN ISO 11111-1:2016

INTERNATIONAL STANDARD ISO 11111-1:2016(E)

Textile machinery — Safety requirements —

Part 1: Common requirements

1 Scope

This part of ISO 11111 specifies safety requirements for frequently occurring hazards common to the types of textile machinery and the hazards of certain machine elements covered by ISO 11111-2 to ISO 11111-7. The standard series is complemented by the type C standards ISO 9902 (all parts) with respect to noise emission measurement and ISO 23771 with respect to measures for the reduction of noise emissions.

This part of ISO 11111 is applicable to machinery plant and related equipment intended to be used in the textile industry for the following purposes:

— opening, cleaning, blending, carding, preparation subsequent to carding, spinning and other processing of fibres (staple and filament) and other materials to form yarn or nonwoven material (including felts);

— winding, doubling, twisting, texturing, etc., of yarns and the processing of yarns preparatory to weaving and knitting;

— weaving, knitting, lace-making and similar utilization of yarn, etc., to form fabric;

— forming of braid, cord, strand, rope, twine, net, etc., except take-up reels of stranding and laying machinery;

— processing, including the pretreatment, bleaching, dyeing, printing and finishing of fibre, yarn, fabric, braid, cord, etc., and final assembly for dispatch;

— piece-dyeing of made-up goods;

— finishing of warp and weft knitting, including hosiery, other than assembly of the finished product (e.g. sewing);

— manufacturing of carpets by weaving, tufting and other processes.

This part of ISO 11111 applies to all machinery, plant and equipment used during the processes listed above, including equipment to enable automated operation of the machines and processes in either free-standing or complex installations, such as pneumatic fibre transportation, but excluding other transportation between the interfaces of the machines.

NOTE 1 The standard for a specific textile machine will normally consist of two parts: this part of ISO 11111 and the specific part of ISO 11111 relevant to that machine. However, in the case of nonwoven lines, which are covered by ISO 11111-3, ISO 11111-2, ISO 11111-6 and ISO 11111-7 are also to be taken into account.

This part of ISO 11111 does not deal with specific requirements for pressure containment.

NOTE 2 In the EU and EFTA, specific directives for pressure vessels and electromagnetic compatibility, among others, exist.

ISO 11111 (all parts) addresses hazards arising from the transport, assembly and commissioning of the machinery, its adjustment, use, maintenance, decommissioning, dismantling and disposal. Manual loading/unloading is considered to be part of the normal operation of the machinery.

© ISO 2016 – All rights reserved

Documents
Document Sharing Hub
Full document details: BS EN ISO 11111-1:2016

This part of ISO 11111 and the other parts of ISO 11111 are not applicable to machinery, plant and related equipment used for

— manufacturing continuous filaments and man-made fibres up to and including the formation of the first textile package (e.g. continuous filament cheese, staple fibre bale),

— hackling and carding of flax and similar,

— manufacturing of spun-bonded and melt-blown nonwovens,

— forming and making up of garments, household and industrial textile goods, and the pressing and die cutting of nonwoven fabric,

— laundering and dry cleaning of made-up textile goods,

— servicing of textile machines (e.g. machines for card wire mounting, cleaning machines for components of printing machines), and

— certain cutting devices, e.g. log-slitting device, laser cutting, high pressure water jets, ultrasonic device.

NOTE 3 The machines and equipment listed in Annex E are used in the textile industry but are not within the scope of this part of ISO 11111.

This part of ISO 11111 and the other parts of ISO 11111 are not applicable to machinery intended for use in potentially explosive atmospheres.

This part of ISO 11111 and the other parts of ISO 11111 are not applicable to machines which are manufactured before the dates of publication of the International Standards.

2 Normative references

The following documents, in whole or in part, are normatively referenced in this document and are indispensable for its application. For dated references, only the edition cited applies. For undated references, the latest edition of the referenced document (including any amendments) applies.

ISO 4413:2010, *Hydraulic fluid power — General rules and safety requirements for systems and their components*

ISO 9902 (all parts), *Textile machinery — Noise test code*

ISO 10218-1:2011, *Robots and robotic devices — Safety requirements for industrial robots — Part 1: Robots*

ISO 11111-2:2005, *Textile machinery — Safety requirements — Part 2: Spinning preparatory and spinning machines*, amended by ISO 11111-2:2005/Amd 1:2009 and ISO 11111-2:2005/Amd 2:2016

ISO 11111-3:2005, *Textile machinery — Safety requirements — Part 3: Nonwoven machinery*, amended by ISO 11111-3:2005/Amd 1:2009 and ISO 11111-3:2005/Amd 2:2016

ISO 11111-4:2005, *Textile machinery — Safety requirements — Part 4: Yarn processing, cordage and rope manufacturing machinery*, amended by ISO 11111-4:2005/Amd 1:2009 and ISO 11111-4:2005/Amd 2:2016

ISO 11111-5:2005, *Textile machinery — Safety requirements — Part 5: Preparatory machinery to weaving and knitting*, amended by ISO 11111-5:2005/Amd 1:2009 and ISO 11111-5:2005/Amd 2:2016

ISO 11111-6:2005, *Textile machinery — Safety requirements — Part 6: Fabric manufacturing machinery*, amended by ISO 11111-6:2005/Amd 1:2009 and ISO 11111-6:2005/Amd 2:2016

ISO 11111-7:2005, *Textile machinery — Safety requirements — Part 7: Dyeing and finishing machinery*, amended by ISO 11111-7:2005/Amd 1:2009 and ISO 11111-7:2005/Amd 2:2016

ISO 11161:2007, *Safety of machinery — Integrated manufacturing systems — Basic requirements*

© ISO 2016 – All rights reserved
Documents
Document Sharing Hub
Full document details: BS EN ISO 11111-1:2016

ISO 12100:2010, *Safety of machinery — General principles for design — Risk assessment and risk reduction*

ISO 13849-1:2006, *Safety of machinery — Safety-related parts of control systems — Part 1: General principles for design*

ISO 13849-2:2012, *Safety of machinery — Safety-related parts of control systems — Part 2: Validation*

ISO 13850, *Safety of machinery — Emergency stop function — Principles for design*

ISO 13851:2002, *Safety of machinery — Two-hand control devices — Functional aspects and design principles*

ISO 13854, *Safety of machinery — Minimum gaps to avoid crushing of parts of the human body*

ISO 13855:2010, *Safety of machinery — Positioning of safeguards with respect to the approach speeds of parts of the human body*

ISO 13857:2008, *Safety of machinery — Safety distances to prevent hazard zones being reached by upper and lower limbs*

ISO 14118:2000, *Safety of machinery — Prevention of unexpected start-up*

ISO 14119:2013, *Safety of machinery — Interlocking devices associated with guards — Principles for design and selection*

ISO/TR 14121-2, *Safety of machinery — Risk assessment — Part 2: Practical guidance and examples of methods*

ISO 14122-1, *Safety of machinery — Permanent means of access to machinery — Part 1: Choice of fixed means of access between two levels*

ISO 14122-2, *Safety of machinery — Permanent means of access to machinery — Part 2: Working platforms and walkways*

ISO 14122-3, *Safety of machinery — Permanent means of access to machinery — Part 3: Stairs, stepladders and guard-rails*

ISO 14122-4, *Safety of machinery — Permanent means of access to machinery — Part 4: Fixed ladders*

ISO 14123-1:1998, *Safety of machinery — Reduction of risks to health from hazardous substances emitted by machinery — Part 1: Principles and specifications for machinery manufacturers*

ISO 14123-2, *Safety of machinery — Reduction of risks to health from hazardous substances emitted by machinery — Part 2: Methodology leading to verification procedures*

ISO 23771, *Textile machinery — Guide to the design of textile machinery for reduction of the noise emissions*

IEC 60204-1:2005, *Safety of machinery — Electrical equipment of machines — Part 1: General requirements*

IEC 60447:2004, *Basic and safety principles for man-machine interface, marking and identification — Actuating principles*

IEC 61310-1:2007, *Safety of machinery — Indication, marking and actuation — Part 1: Requirements for visual, acoustic and tactile signals*

IEC 61496-1:2012, *Safety of machinery — Electro-sensitive protective equipment — Part 1: General requirements and tests*

IEC 61496-2, *Safety of machinery — Electro-sensitive protective equipment — Part 2: Particular requirements for equipment using active opto-electronic protective devices (AOPDs)*

IEC 61496-3, *Safety of machinery — Electro-sensitive protective equipment — Part 3: Particular requirements for Active Opto-electronic Protective Devices responsive to Diffuse Reflection (AOPDDR)*

AVA Documents
Document Sharing Hub

© ISO 2016 – All rights reserved

Full document details: BS EN ISO 11111-1:2016

IEC 62061:2005+A1:2012+A2:2015, *Safety of machinery — Functional safety of safety-related electrical, electronic and programmable electronic control systems*

EN 614-1+A1, *Safety of machinery — Ergonomic design principles — Part 1: Terminology and general principles*

EN 953+A1, *Safety of machinery — Guards — General requirements for the design and construction of fixed and movable guards*

EN 1005-1+A1, *Safety of machinery — Human physical performance — Part 1: Terms and definitions*

EN 1005-2+A1, *Safety of machinery — Human physical performance — Part 2: Manual handling of machinery and component parts of machinery*

EN 1005-3+A1, *Safety of machinery — Human physical performance — Part 3: Recommended force limits for machinery operation*

EN 1005-4+A1, *Safety of machinery — Human physical performance — Part 4: Evaluation of working postures and movements in relation to machinery*

EN 1127-1, *Explosive atmospheres — Explosion prevention and protection — Part 1: Basic concepts and methodology*

EN 12198-1+A1, *Safety of machinery — Assessment and reduction of risks arising from radiation emitted by machinery — Part 1: General principles*

EN 12198-3+A1, *Safety of machinery — Assessment and reduction of risks arising from radiation emitted by machinery — Part 3: Reduction of radiation by attenuation or screening*

EN 12464-1, *Light and lighting — Lighting of work places — Part 1: Indoor work places*

EN 60825-1, *Safety of laser products — Part 1: Equipment classification and requirements*

3 Terms and definitions

For the purposes of this document, the terms and definitions given in ISO 12100 and EN 953+A1, and the following apply.

NOTE Where values are applicable to terms defined in this clause, these values are indicated in A.1.

3.1
stopping time
time taken by a machine or machine part to reach a stand-still after the signal to stop has been given

3.2
access time
time required to reach a dangerous part from first exposure to that part

3.3
crawl speed
linear or tangential speed of machine elements which is substantially below its normal speed and has a maximum speed and a maximum stopping distance

3.4
reduced running speed
linear or tangential speed of machine elements which is substantially below its normal speed and has a maximum stopping distance

© ISO 2016 – All rights reserved
Documents
Document Sharing Hub
Full document details: BS EN ISO 11111-1:2016

3.5
fence guard
fixed guard to provide a barrier at a distance which prevents access to a danger zone

Note 1 to entry: It can be either fixed directly to the machine or free-standing or fixed to the floor or constructional elements of the building. Access to the space between the fence guard and the machine is controlled by interlocked doors (see Annex A).

3.6
lap
wrap
undesired wrapping of the process material around a rotating part of the machine

3.7
normal operation
entire sequence of the production process, including start-up and incidental cleaning and elimination of routine process faults

EXAMPLE Feeding and removal of process material, threading up, process surveillance, quality tests, removal of fibre fly, mending of broken ends.

3.8
special operation
procedure and action not included in normal operation

EXAMPLE Setting, tuning, major cleaning, elimination of substantial process faults, maintenance such as the removal of blockages, laps except on spinning, twisting and texturizing machines, re-sewing broken cloth, elimination of rope loops.

3.9
complex installation
combination of textile machines and service equipment, arranged to work as one integrated production unit, subject to overall control either from a central system or from distributed, communicating systems

3.10
automatic machinery [equipment]
machinery [equipment] for which systems are employed to govern its operation without further intervention from the operator once the start control has been activated

Note 1 to entry: Such machines may be either free-standing or included in a complex installation. Automatic control can apply to the operational sequence of a machine and its integrated equipment located in a permanent place, and equipment which is mobile, including handling devices (e.g. piecing devices, knotters).

4 List of significant hazards

Significant hazards frequently occurring on textile machinery are considered in Clause 5. Additional significant hazards common to certain machine elements are given in Clause 6. Specific significant hazards for individual textile machines are considered in ISO 11111-2 to ISO 11111-7.

Before using this part of ISO 11111, it is important to carry out a check to ascertain that the specific machine has the significant hazards identified.

NOTE The significant hazards of textile machinery are always considered in conjunction with safety requirements.

© ISO 2016 – All rights reserved

Documents
Document Sharing Hub
Full document details: BS EN ISO 11111-1:2016

5 Safety requirements and/or measures for frequently occurring hazards

5.1 General

This clause contains safety requirements and/or measures to be taken in relation to frequently occurring significant hazards related to textile machinery.

Machinery shall comply with the safety requirements and/or protective measures of this clause, Clause 6 and ISO 11111-2 to ISO 11111-7. In addition, the machine shall be designed according to the principles of ISO 12100 for hazards relevant but not significant, which are not dealt with by this part of ISO 11111.

Where the means of reducing the risk is by the arrangement of the installed machine or a safe system of working the machine, the manufacturer shall give a detailed description of this in the instruction handbook.

Where type B standards that are referred to offer a choice of safety requirements and/or measures having different levels of safety and the selection is not specified in this part of ISO 11111 or in ISO 11111-2 to ISO 11111-7, the manufacturer shall carry out a risk assessment to identify the appropriate level.

5.2 Safety requirements for the different phases of "life" of a machine

The safety requirements given in Clause 5 and in Clause 6, together with the requirements set out in ISO 11111-2 to ISO 11111-7, apply to the use and maintenance of the machine. For the other phases in the life of a machine, mainly see Clause 8.

5.3 Risk reduction by design and safeguarding

5.3.1 Inherently safe design measures

A design concept for the machine and/or its mechanisms which does not inherently create a hazard shall, as far as possible, be adopted.

EXAMPLE The use of pneumatic trunking instead of open lattice conveyors, and the use of pneumatic uncurling devices instead of mechanical uncurling rollers.

For textile machinery, the technical guidelines on inherently safe design in accordance with ISO 12100:2010, 6.2.2, shall apply.

5.3.2 Consideration of geometrical factors and physical aspects

For risk reduction of textile machinery, the geometrical factors and physical aspects given in Table 1 and in accordance with ISO 12100:2010, 6.2.2, shall apply.

Table 1 — Risk reduction by design

Application	Reference
Making machines safe by virtue of	ISO 13854, ISO 13857
— the shape and the relative location of their mechanical component parts,	A.4
— the limitation of the actuating force,	A.1
— the limitation of the mass and/or velocity.	

5.3.3 Reduction of risks by safeguarding

Guards and safety devices used to reduce risks from textile machines shall conform to the requirements of the standards given in Tables 2 and 3.

© ISO 2016 – All rights reserved
Documents
Document Sharing Hub
Full document details: BS EN ISO 11111-1:2016

Table 2 — Safety requirements and/or measures for guards

Application	Reference
Guard selection, unless specified in Clause 6 and in ISO 11111-2, ISO 11111-3, ISO 11111-4, ISO 11111-5, ISO 11111-6 and ISO 11111-7	ISO 12100:2010, 6.3.2 EN 953+A1
Guard design and construction	ISO 12100:2010, 6.3.3 EN 953+A1
Guard fastening	EN 953+A1
Guard arrangement, unless specified in Clause 6 and in ISO 11111-2, ISO 11111-3, ISO 11111-4, ISO 11111-5, ISO 11111-6 and ISO 11111-7[a]	ISO 13857:2008, Tables 1, 4 and 7 and B.1
Guard interlocking, unless specified in Clause 6 and in ISO 11111-2, ISO 11111-3, ISO 11111-4, ISO 11111-5, ISO 11111-6 and ISO 11111-7	ISO 14119:2013, Clauses 5, 6 and 7
Fence guard	A.3
[a] The safety distances for guards shall apply to all positions for normal operation as well as for setting, adjustment, maintenance work and elimination of process faults.	

Table 3 — Safety requirements and/or measures for safety devices

Application	Reference
Selection of safety devices, unless specified in Clause 6 and in ISO 11111-2, ISO 11111-3, ISO 11111-4, ISO 11111-5, ISO 11111-6 and ISO 11111-7	ISO 12100:2010, 6.3.2
Technical characteristics of safety devices	ISO 12100:2010, 6.3.3.3 IEC 61496-1
Positioning of safety devices, unless specified in Clause 6 and in ISO 11111-2, ISO 11111-3, ISO 11111-4, ISO 11111-5, ISO 11111-6 and ISO 11111-7[a]	ISO 13855:2010, Clause 7
Interlocking (with and without guard locking): — selection — design	ISO 14119:2013, Clause 7 ISO 14119:2013, Clauses 5 and 6 IEC 61496-1
Electro-sensitive protective equipment:[b, d] — arrangement	IEC 61496-1 ISO 13855:2010, Clause 6
Active opto-electronic protective devices (AOPDs): [b, d] — arrangement — safety distance (upper and lower limbs)	IEC 61496-2 ISO 13855:2010, Clause 6 ISO 13857
Active opto-electronic protective devices responsive to diffuse reflection (AOPDDR):[b, d] — arrangement — safety distance (upper and lower limbs)	IEC 61496-3 ISO 13855:2010, Clause 6 ISO 13857
[a] The safety distances for safety devices shall apply to all positions for normal operation as well as for setting, adjustment, maintenance work and elimination of process faults. [b] The type selected in accordance with IEC 61496-1 shall be consistent with the required performance level (PL) or safety integrity level (SIL) of the safety-related part of the control system, as defined in ISO 13849-1:2006, 4.2.2 (or IEC 62061: 2005+A1:2012+A2:2015, 5.2.4.). [c] The type selected in accordance with ISO 13851 shall be consistent with the required performance level (PL) or safety integrity level (SIL) of the safety-related part of the control system, as defined in ISO 13849-1:2006, 4.2.2 (or IEC 62061: 2005+A1:2012+A2:2015, 5.2.4). [d] Sensitive protective equipment (SPE) in accordance with ISO 12100:2010, 3.28.5.	

© ISO 2016 – All rights reserved

Documents
Document Sharing Hub
Full document details: BS EN ISO 11111-1:2016

Table 3 *(continued)*

Application	Reference
Pressure-sensitive mats and floors[d]	EN 1760-1
Pressure-sensitive edges and bars[d]	EN 1760-2
Pressure-sensitive bumpers, plates, wires[d]	EN 1760-3
Two-hand controls:	ISO 12100:2010, 3.28.4 IEC 60204-1:2005, 9.2.6.2
— selection[c]	ISO 13851:2002, Clause 4 and Annex B
— arrangement	ISO 13855:2010, Clause 8
Hold-to-run control devices (touch control, biased-off switch)	ISO 12100:2010, 3.28.3 IEC 60204-1:2005, 9.2.6.1
Limited movement control device	ISO 12100:2010, 3.28.9

[a] The safety distances for safety devices shall apply to all positions for normal operation as well as for setting, adjustment, maintenance work and elimination of process faults.

[b] The type selected in accordance with IEC 61496-1 shall be consistent with the required performance level (PL) or safety integrity level (SIL) of the safety-related part of the control system, as defined in ISO 13849-1:2006, 4.2.2 (or IEC 62061: 2005+A1:2012+A2:2015, 5.2.4.).

[c] The type selected in accordance with ISO 13851 shall be consistent with the required performance level (PL) or safety integrity level (SIL) of the safety-related part of the control system, as defined in ISO 13849-1:2006, 4.2.2 (or IEC 62061: 2005+A1:2012+A2:2015, 5.2.4).

[d] Sensitive protective equipment (SPE) in accordance with ISO 12100:2010, 3.28.5.

5.4 Safety requirements for various hazards

5.4.1 General

The principles of risk elimination, reduction by design and safeguarding in accordance with 5.3 shall apply.

5.4.2 Electrical hazards

5.4.2.1 General

Hazards

— Electrical, generated by contact of persons with live parts and parts which have become live under fault conditions (e.g. insulation fault or failure), or by approach of persons to live parts, especially in the high voltage range.

— Mechanical, due to failure of electrical equipment, e.g. failure of the control system, unexpected restart.

5.4.2.2 General safety requirements for electrical equipment

Hazards arising from electrical equipment shall be reduced by the application of safety requirements selected from the clauses of IEC 60204-1 in accordance with Table 4.

© ISO 2016 – All rights reserved
Documents
Document Sharing Hub
Full document details: BS EN ISO 11111-1:2016

Table 4 — Safety requirements for electrical equipment of machines

Electrical hazards	**Reference** IEC 60204-1:2005
Electric shock	Clauses 6 and 8
Over-current, over-speed and overload	Clauses 7 and 8
Environmental influences	Clause 4
Restart after voltage drop or supply interruption	7.5
Accessibility, layout and identification of control equipment	Clauses 10, 11 and 16
Ergonomics for manual operation	Clauses 10 and 11
Cabling and wiring	Clauses 12 and 13
Accessories and lighting	Clause 15
Documentation and instruction handbook	Clause 17
Testing	Clause 18

5.4.2.3 Specific safety requirements for control systems and devices

Hazards arising from the control system shall be reduced by the application of safety requirements selected from the clauses of IEC 60204-1 or from other relevant standards in accordance with Table 5.

Table 5 — Safety requirements for control systems

Application	**Reference**
Design of control system	ISO 12100:2010, 6.2.11
Control circuits and functions	IEC 60204-1:2005, Clause 9
Control interfaces	IEC 60204-1:2005, Clause 10
Programmable electronic equipment	ISO 13849-1 or IEC 62061
Control gear	IEC 60204-1:2005, Clause 11
Fault exclusion/proven components	ISO 13849-2:2012, Clause 7
Required Performance Level (PL) or Safety Integrity Level (SIL)	ISO 13849-1 or IEC 62061
Categories of resistance to faults	ISO 13849-1:2006, Clause 6
Control devices	IEC 60204-1:2005, Clause 10
Safety signals, symbols and signs (visual, acoustic and tactile)	IEC 61310-1:2007, Clauses 5 to 8
Arrangement of control devices	ISO 12100:2010, 6.2.8 and 6.2.11.8
Actuating principles	IEC 60447:2004

If in Clause 6 or in ISO 11111-2, ISO 11111-3, ISO 11111-4, ISO 11111-5, ISO 11111-6 and ISO 11111-7 a performance level (PL) in accordance with ISO 13849-1 or a safety integrity level (SIL) in accordance with IEC 62061 has not been selected, a PL = c or SIL = 1 shall at least be used for the safety-related parts of control systems.

The adoption of a lower level than performance level PL = c or safety integrity level SIL = 1 shall be based on a risk assessment in accordance with ISO 13849-1:2006, Annex A or IEC 62061:2005+A1:2012+A2:2015, Annex A.

Fault exclusions for components used in systems required to comply with a specified performance level shall be in accordance with ISO 13849-2.

© ISO 2016 – All rights reserved

Documents
Document Sharing Hub
Full document details: BS EN ISO 11111-1:2016

5.4.2.4 Specific safety requirements for starting and stopping

Hazards arising from starting and stopping shall be reduced by the application of safety requirements selected from the clauses of IEC 60204-1 or from other relevant standards in accordance with Table 6.

Table 6 — Safety requirements for starting and stopping

Application	Reference
Starting	ISO 12100:2010, 6.2.11.2 and 6.2.11.3
Stopping[a]	IEC 60204-1:2005, 9.2.2
Unexpected start-up	ISO 14118:2000, Clauses 5 and 6
Isolation from energy sources	ISO 12100:2010, 6.3.5.4 IEC 60204-1:2005, Clause 5
Start-up by inadvertent actuation	5.4.2.4 a) and ISO 12100:2010, 6.2.11.8
Observation of danger zones from main control position	5.4.2.4 b)
Start-up by unauthorized persons	5.4.2.4 b)
Automatic restart after process interruption	5.4.2.4 c)
Start-up after interruption of power supply	IEC 60204-1:2005, 7.5
Emergency stopping	5.4.2.4 d) ISO 12100:2010, 6.3.5.2 ISO 13850 IEC 60204-1:2005, 10.7 and 10.8 ISO 11161

[a] Each workstation of the machine shall be provided with a control device for generating a safe normal stop in accordance with IEC 60204-1; stop category 0 or 1. If, additionally, a stop control is required to generate an operational stop (in accordance with IEC 60204-1; stop category 2), the stop condition shall be monitored to detect faults to prevent an unintended restart.

a) Requirements concerning start-up by inadvertent actuation shall be satisfied by any of the following:

   1) control switch button slightly recessed in relation to the surrounding surface;

   2) covered control switch;

   3) control switch requiring more than one operation (e.g. pressing and turning);

   4) control switch located beneath a hinged flap;

   5) control switch with lock in the off position;

   6) two-button start control.

b) Textile machinery plant or systems which cannot be totally observed from the main control position (e.g. automated blow room machinery, continuous carpet dyeing and finishing lines, nonwoven production lines), or in the proximity of which communication is difficult (owing, in particular, to loud noise, e.g. speed frames, weaving machines, braiding machines) shall, in addition to the measures specified in ISO 12100:2010, 6.2.8, be provided with individual key-operated control switches or similar devices (e.g. lockable isolator switches) to prevent the equipment being started up by unauthorized persons. In order to observe the danger zones from the control position, mirrors, camera screens and other viewing auxiliary means may be used or the control console may be provided in an elevated position.

NOTE 1 "Start-up by unauthorized persons" means switching on a machine by a person neither deputed nor directed so to do.

© ISO 2016 – All rights reserved
Documents
Document Sharing Hub
Full document details: BS EN ISO 11111-1:2016

NOTE 2 For interconnected machines (integrated manufacturing systems), the safety requirements given in ISO 11161 can be used.

c) Where automated process fault elimination devices are fitted to a machine, automatic restart after process interruption may only be possible when guards and safety devices are in position and activated. Where there is a residual risk, the operator shall be warned by a warning signal in accordance with IEC 61310-1 before restart. The warning device shall be positioned close to the danger zone.

d) Where a warning signal is used to warn against the start of a machine and to allow persons in danger to reach a safeguarded place within sufficient time, the start/restart shall be in accordance with ISO 11161:2007, 8.8 unless otherwise indicated in ISO 11111-2, ISO 11111-3, ISO 11111-4, ISO 11111-5, ISO 11111-6 and ISO 11111-7.

5.4.3 Mechanical hazards

Hazards

Table 7 lists, illustrates and describes hazards associated with textile machinery, from, for example, machine elements or transmission parts.

Safety requirements

Mechanical hazards arising from the machine shall be reduced by the application of safety requirements in accordance with 5.3.

© ISO 2016 – All rights reserved

Documents
Document Sharing Hub
Full document details: BS EN ISO 11111-1:2016

Table 7 — Mechanical hazards

Hazard	Illustration examples[a]	Description
Crushing	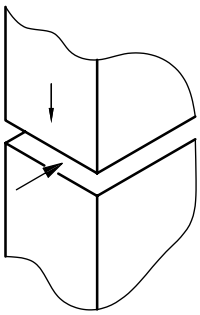	Generated when — two movable parts are moving towards each other, or — one movable part is moving towards a fixed part. (For minimum gaps, see ISO 13854.)
Shearing	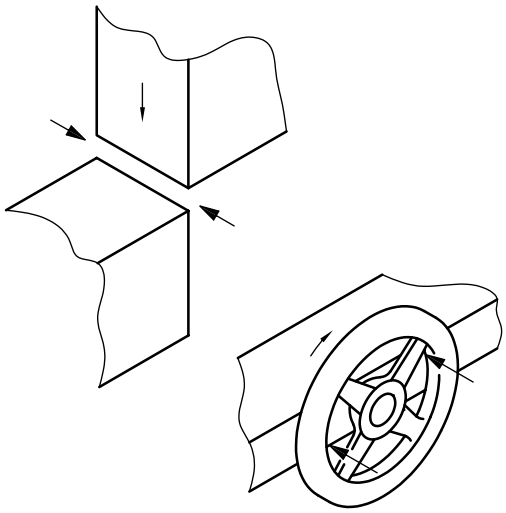	Generated when — two movable parts move closely past each other, or — one movable part moves closely past a fixed part.
Cutting or severing	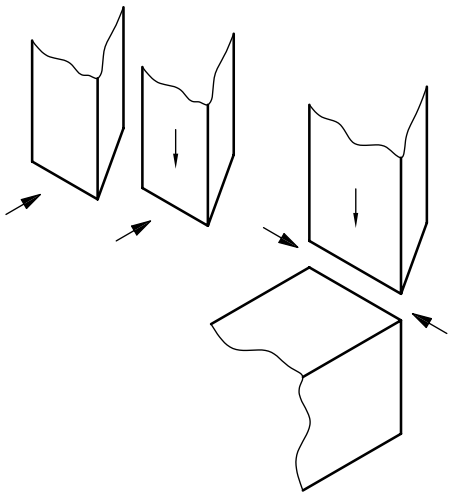	Generated when stationary or movable parts have sharp edges (e.g. blades, knives).
Entanglement	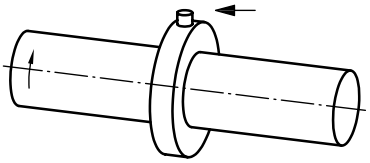	Generated when shafts or shaft ends, rotating or traversing parts with projecting edges, teeth, cotters, screws, bolts, oiler cups, etc., can entangle clothing, hair and/or body parts.

[a] In the figures, the smaller arrow indicates the moving direction, while the larger one indicates the danger area.

© ISO 2016 – All rights reserved
Documents
Document Sharing Hub
Full document details: BS EN ISO 11111-1:2016

Table 7 *(continued)*

Hazard	Illustration examples[a]	Description
Drawing-in and trapping	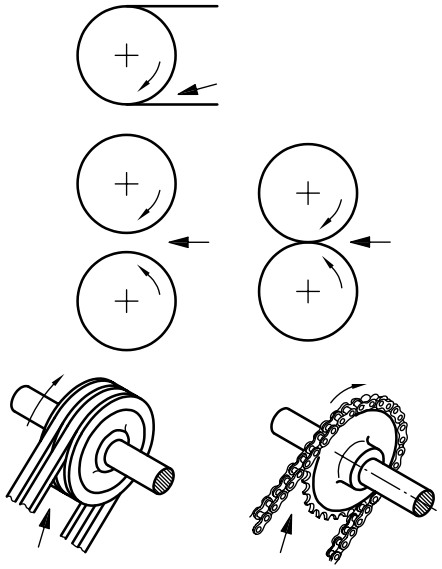	Generated when — two-counter-rotating parts are in either direct or close contact with each other, — rotating parts are in contact with tangential parts or process materials (e.g. rollers and process materials, conveyor belts and pulleys, chains and sprockets), or — rotating parts are close to a fixed surface.
Impact	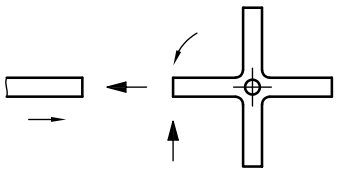	Generated when a moving part can strike an exposed person (e.g. traversing parts, beaters, flyers, winches).
Stabbing or puncture	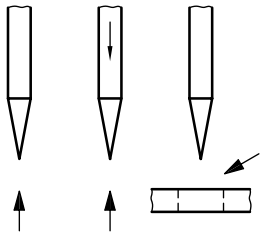	Generated when stationary or moving parts have pointed edges or tips.
Friction or abrasion	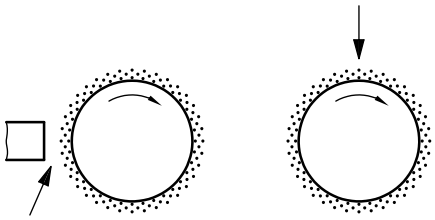	Generated when contact is made with the surface of a rapidly moving part or with a moving part having an abrasive surface (e.g. card clothing).

[a] In the figures, the smaller arrow indicates the moving direction, while the larger one indicates the danger area.

© ISO 2016 – All rights reserved

Documents
Document Sharing Hub
Full document details: BS EN ISO 11111-1:2016

Table 7 *(continued)*

Hazard	Illustration examples[a]	Description
Ejection of parts (including process material falling)	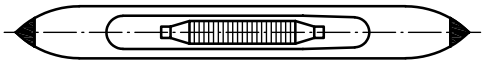	Generated when a moving part of machinery or process material leaves its defined path or is thrown out of the machine (e.g. tubes, bobbins, shuttles or beams).
Overturning, unexpected loss of stability	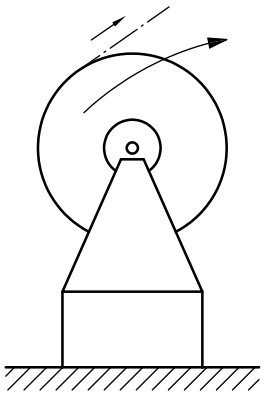	Generated when a part of a machine or the machine itself can overturn or become unfastened from its mountings due to inherent lack of stability or rapid start-up of certain processes (e.g. running off process material from A-frames).
Slip, trip and fall	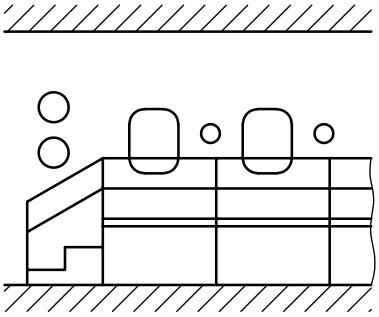	Generated when — surfaces of walkways, work platforms, staircases, ladders, etc., are slippery, — floor surfaces are uneven or parts are projecting, — process material, its carrier (e.g. tubes, bobbins, beams) have fallen onto or are left lying on the floor, or — no rail is present.

[a] In the figures, the smaller arrow indicates the moving direction, while the larger one indicates the danger area.

5.4.4 Static electricity

Hazards

Static electricity can be unintentionally generated in the course of the production process (e.g. carding fibre) and result in the discharge of sparks, which can cause fire or explosion, or shocks to persons contacting parts charged by process materials.

Safety requirements

Appropriate measures to prevent the build-up of static electricity or to discharge shall be provided.

To prevent the generation of static electricity, suitable materials from which the machine is constructed shall be used.

To discharge static electricity, one of the following measures or any combination thereof shall be taken:

a) providing an earthed protective conductor on the conductive parts of the machinery or plant. The resistance (impedance) of the conductors shall be chosen in dependence on the discharge properties requested. A conductor could also be conductive materials preventing electrostatic charge and may discharge available charges to the conducting part of the machine or plant, e.g. conductive bearings or seals;

b) fitting static eliminators in appropriate positions on machinery;

© ISO 2016 – All rights reserved
Documents
Document Sharing Hub
Full document details: BS EN ISO 11111-1:2016

c) providing information in the instruction handbook on avoiding static electricity. This information can be given e.g. by indicating the minimum humidity to be provided by the air-conditioning system or by providing instructions on how to avoid over-drying.

NOTE Detailed information for the avoidance of static electricity is given in CENELEC Report R 044–001:1999.

5.4.5 Fluid power systems and components

Hazards

Generated when fluid under pressure is ejected from or leaks out of tubes, fittings, nozzles, vessels and hoses (e.g. compressed air, hydraulic oil).

Safety requirements

The safety requirements and/or measures given in ISO 12100:2010, 6.2.10, in ISO 4413:2010, 5.2 (hydraulic) and in ISO 4414:2010, 5.2 (pneumatic) shall apply.

5.4.6 Extreme temperatures

5.4.6.1 Hot surfaces and flames

Hazards

Generated by contact of persons with hot surfaces of machines or vessels used or with flames (e.g. singeing machines) or by proximity radiation heaters (e.g. infrared heaters). The hot surfaces result from the incorporation of purposely heated parts to directly assist and further the production process (i.e. heated rollers, tubes, burners or plates), or are generated in the course of the production process, even extending to the entire vessels themselves, due to the hot liquors or steam they contain.

Safety requirements

Textile machines shall be designed so as to reduce the risk of burn injury caused by intended or non-intended contact with or proximity to machine parts, process material at high temperatures or to flames.

The surface temperatures of machine parts, insulation, shields or guards shall not exceed the values given in Annex B.

Where, for technical reasons, these limits cannot be achieved, a warning shall be given on the machine and information shall be given in the instruction handbook concerning instruction and training of operators and the use of personal protective equipment.

5.4.6.2 Hot processing materials — Liquor or steam

Hazards

Generated by splashing or spilling of hot fluids, such as water, steam etc., out of vessels, fittings and sample pots.

© ISO 2016 – All rights reserved

Documents
Document Sharing Hub
Full document details: BS EN ISO 11111-1:2016

Safety requirements

Machines or vessels containing hot liquor or steam shall be designed to prevent any risk of scalding owing to splashing or spilling, including those from thermal reactions caused by chemicals (e.g. when hydrosulfite is added to a liquor).

This shall be achieved by a selection of one or more of the following means:

— providing means for limitation of temperature during the addition of chemicals;

— providing means for limitation of liquor level during the addition of chemicals;

— indirect steam heating rather than direct steam heating;

— provision of atmospheric vessels with interlocked doors or lids to prevent adding chemicals at high temperatures or liquor level;

— providing deflection devices, or a catch pan, spillway or similar device to prevent scalding of the operator by splashing or spilling liquor;

— locating steam control devices or valves in a safe place or, when to be fitted by the user in the steam supply pipe, placing a warning in the instruction handbook.

5.4.7 Noise reduction

Hazards

Hearing loss and physiological disorders (as occupational diseases), interference with speech communication and acoustic signals (as source of accidents), generated from fast-rotating machine elements (e.g. spindles, flyers, rotors, texturing devices, gears), fast traversing machine elements (e.g. thread guides, needle bars, sleys, shed forming equipment), flowing fluids (e.g. suction devices, direct steam heating) and other loud sources on the machines.

Safety requirements

The requirements according to ISO 23771 shall apply.

5.4.8 Lasers

Hazards

Burning generated by contact with lasers (e.g. monitoring devices).

Safety requirements

The requirements of EN 60825-1 shall apply.

5.4.9 Radiation

Hazards

Radiation damage generated by non-ionizing or ionizing radiation [e.g. radio frequency (high-frequency dryers), infrared-radiation (infrared dryers) or β-rays (monitoring devices)].

Safety requirements

The requirements of EN 12198-1+A1 and EN 12198-3+A1 shall apply.

© ISO 2016 – All rights reserved
Documents
Document Sharing Hub
Full document details: BS EN ISO 11111-1:2016

5.4.10 Materials and substances

Hazards

Various materials and substances processed, used, liberated or exhausted in the textile industry can result in a foreseeable risk from contact, inhalation or ingestion. Included are dusts, fluids, gases, mists and fumes having a harmful, toxic, biological corrosive and/or irritant effect (e.g. asbestos, cotton dust, solvents, certain dyestuffs and chemicals). These are generated, for example, in spinning preparation, sizing, waxing, bleaching, dyeing and various finishing processes.

Safety requirements

To reduce the foreseeable risk, textile machines shall be equipped and/or designed so that hazardous substances, including dust from fibre, can be confined, extracted and/or reduced to a non-hazardous level (e.g. by totally enclosing machines, sealing any doors or covers, and/or exhaust ventilation systems which provide a negative pressure). Where machinery is not enclosed during normal operation, the devices for confinement or extraction shall be as close as possible to the source of emission.

Furthermore, the safety requirements and/or measures given in ISO 14123-1:1998, Clause 6, shall apply.

In the instruction handbook, the machinery manufacturer shall state those materials or substances for which the machine has or has not been specifically prepared.

5.4.11 Fire

Hazards

Fire hazards can be generated in a variety of textile processes (e.g. in spinning preparation, spinning, weaving, cropping or shearing), caused by combustion of fibre, fly or fibre dust, in particular from cotton or bast fibre, through contact with hot bearings, sparks resulting from metallic impurities, electrical sparks, and in various finishing processes from the overexposure of the process yarn or fabric to hot surfaces, radiators or burners. Fire poses the risk of burns or inhalation of toxic fumes.

Safety requirements

Textile machines shall be designed and constructed to reduce the risk of fire and to counter and extinguish fire once generated.

In case fire is a significant hazard (see ISO 11111-2, ISO 11111-3, ISO 11111-4, ISO 11111-5, ISO 11111-6 and ISO 11111-7), measures from the following list shall be selected, with preference for the measures under item a):

a) Measures to avoid the generation of fire:

   1) automatic detection and removal of metallic impurities;

   2) use of spark-proof materials;

   3) information on maintenance procedures to reduce the risk of overheating of machine elements (e.g. due to dust accumulation);

   4) separation of the process material from hot surfaces, burners or radiators, shielding of burners or radiators when the machine comes to rest;

   5) use of devices to detect wrapping of fibrous material;

   6) prevention of dust accumulation.

© ISO 2016 – All rights reserved

Documents
Document Sharing Hub
Full document details: BS EN ISO 11111-1:2016