BS EN ISO 11608-2:2022

BSI Standards Publication

Needle-based injection systems for medical use — Requirements and test methods

Part 2: Double-ended pen needles

Documents
Document Sharing Hub

Full document details: BS EN ISO 11608-2:2022

National foreword

This British Standard is the UK implementation of EN ISO 11608-2:2022. It is identical to ISO 11608-2:2022. It supersedes BS EN ISO 11608-2:2012, which is withdrawn.

The UK participation in its preparation was entrusted to Technical Committee CH/84, Catheters and syringes.

A list of organizations represented on this committee can be obtained on request to its committee manager.

Contractual and legal considerations

This publication has been prepared in good faith, however no representation, warranty, assurance or undertaking (express or implied) is or will be made, and no responsibility or liability is or will be accepted by BSI in relation to the adequacy, accuracy, completeness or reasonableness of this publication. All and any such responsibility and liability is expressly disclaimed to the full extent permitted by the law.

This publication is provided as is, and is to be used at the recipient's own risk.

The recipient is advised to consider seeking professional guidance with respect to its use of this publication.

This publication is not intended to constitute a contract. Users are responsible for its correct application.

© The British Standards Institution 2022
Published by BSI Standards Limited 2022

ISBN 978 0 539 01995 7

ICS 11.040.25

Compliance with a British Standard cannot confer immunity from legal obligations.

This British Standard was published under the authority of the Standards Policy and Strategy Committee on 31 July 2022.

Amendments/corrigenda issued since publication

Date	Text affected

Documents
Document Sharing Hub

Full document details: BS EN ISO 11608-2:2022

EUROPEAN STANDARD

NORME EUROPÉENNE

EUROPÄISCHE NORM

EN ISO 11608-2

May 2022

ICS 11.040.25

Supersedes EN ISO 11608-2:2012

English Version

Needle-based injection systems for medical use - Requirements and test methods - Part 2: Double-ended pen needles (ISO 11608-2:2022)

Systèmes d'injection à aiguille pour usage médical - Exigences et méthodes d'essai - Partie 2: Aiguilles à deux extrémités pour stylos-injecteurs (ISO 1608-2:2022)

Kanülenbasierte Injektionssysteme zur medizinischen Verwendung - Anforderungen und Prüfverfahren - Teil 2: Kanülen mit beidseitigem Anschliff (ISO 11608-2:2022)

This European Standard was approved by CEN on 2 January 2022.

CEN members are bound to comply with the CEN/CENELEC Internal Regulations which stipulate the conditions for giving this European Standard the status of a national standard without any alteration. Up-to-date lists and bibliographical references concerning such national standards may be obtained on application to the CEN-CENELEC Management Centre or to any CEN member.

This European Standard exists in three official versions (English, French, German). A version in any other language made by translation under the responsibility of a CEN member into its own language and notified to the CEN-CENELEC Management Centre has the same status as the official versions.

CEN members are the national standards bodies of Austria, Belgium, Bulgaria, Croatia, Cyprus, Czech Republic, Denmark, Estonia, Finland, France, Germany, Greece, Hungary, Iceland, Ireland, Italy, Latvia, Lithuania, Luxembourg, Malta, Netherlands, Norway, Poland, Portugal, Republic of North Macedonia, Romania, Serbia, Slovakia, Slovenia, Spain, Sweden, Switzerland, Turkey and United Kingdom.

EUROPEAN COMMITTEE FOR STANDARDIZATION
COMITÉ EUROPÉEN DE NORMALISATION
EUROPÄISCHES KOMITEE FÜR NORMUNG

CEN-CENELEC Management Centre: Rue de la Science 23, B-1040 Brussels

© 2022 CEN All rights of exploitation in any form and by any means reserved worldwide for CEN national Members.

Ref. No. EN ISO 11608-2:2022 E

Documents
Document Sharing Hub

Full document details: BS EN ISO 11608-2:2022

European foreword

This document (EN ISO 11608-2:2022) has been prepared by Technical Committee ISO/TC 84 "Devices for administration of medicinal products and catheters" in collaboration with Technical Committee CEN/TC 205 “Non-active medical devices” the secretariat of which is held by DIN.

This European Standard shall be given the status of a national standard, either by publication of an identical text or by endorsement, at the latest by November 2022, and conflicting national standards shall be withdrawn at the latest by November 2022.

Attention is drawn to the possibility that some of the elements of this document may be the subject of patent rights. CEN shall not be held responsible for identifying any or all such patent rights.

This document supersedes EN ISO 11608-2:2012.

Any feedback and questions on this document should be directed to the users’ national standards body/national committee. A complete listing of these bodies can be found on the CEN website.

According to the CEN-CENELEC Internal Regulations, the national standards organizations of the following countries are bound to implement this European Standard: Austria, Belgium, Bulgaria, Croatia, Cyprus, Czech Republic, Denmark, Estonia, Finland, France, Germany, Greece, Hungary, Iceland, Ireland, Italy, Latvia, Lithuania, Luxembourg, Malta, Netherlands, Norway, Poland, Portugal, Republic of North Macedonia, Romania, Serbia, Slovakia, Slovenia, Spain, Sweden, Switzerland, Turkey and the United Kingdom.

Endorsement notice

The text of ISO 11608-2:2022 has been approved by CEN as EN ISO 11608-2:2022 without any modification.

Documents
Document Sharing Hub

Full document details: BS EN ISO 11608-2:2022

Contents

Page

Foreword ... **v**
Introduction ... **vii**
1 Scope ... **1**
2 Normative references ... **1**
3 Terms and definitions ... **1**
4 Symbols ... **3**
5 Requirements ... **3**
5.1 Needle tube requirements ... 3
5.1.1 General ... 3
5.1.2 Needle tubing materials ... 4
5.1.3 Tubing characteristics ... 4
5.2 Double-ended pen needle requirements ... 4
5.2.1 General ... 4
5.2.2 Biocompatibility ... 4
5.2.3 Dimensions for double-ended pen needle assembly ... 4
5.2.4 Needle points ... 5
5.2.5 Freedom from defects ... 5
5.2.6 Flow rate through the needle ... 5
5.2.7 Bond between hub and needle tube ... 6
5.2.8 Dislocation of measuring point at patient end ... 7
5.2.9 Ease of assembly ... 7
5.2.10 Sterility ... 7
5.2.11 Pyrogenicity ... 8
5.3 Functional compatibility with NISs ... 8
5.3.1 General ... 8
5.3.2 Dose delivery ... 8
5.3.3 Needle removal torque ... 9
6 Sampling ... **10**
7 Preconditioning of needles ... **13**
7.1 Preconditioning in a dry-heat, cold storage and damp heat atmosphere ... 13
7.2 Preconditioning in a cyclical atmosphere ... 13
8 Standard atmosphere and test apparatus ... **13**
8.1 Standard test atmosphere ... 13
8.2 Test gauge ... 13
8.3 Test apparatus ... 14
9 Test methods ... **14**
9.1 Bond between hub and needle tube ... 14
9.2 Determination of dislocation of measuring point at patient end ... 14
9.3 Ease of assembly ... 15
9.4 Functional compatibility with NISs ... 15
9.4.1 Sample quantity requirements ... 15
9.4.2 Test procedures for testing dose delivery ... 16
9.4.3 Procedure for testing needle hub removal torque ... 17
10 Packaging ... **17**
11 Information supplied with the needle(s) ... **17**
11.1 General ... 17
11.2 Marking ... 18
11.2.1 Marking on the unit packaging ... 18
11.2.2 Marking on the user packaging ... 19
11.3 Instructions for use ... 20

© ISO 2022 – All rights reserved

AVA Documents
Document Sharing Hub
Full document details: BS EN ISO 11608-2:2022

Annex A (normative) **Determination of flow rate through needle** **21**
Annex B (informative) **Needle bonding strength test method** **24**
Annex C (informative) **Additional background for requirements** **25**
Bibliography **30**

© ISO 2022 – All rights reserved
Documents
Document Sharing Hub
Full document details: BS EN ISO 11608-2:2022

Foreword

ISO (the International Organization for Standardization) is a worldwide federation of national standards bodies (ISO member bodies). The work of preparing International Standards is normally carried out through ISO technical committees. Each member body interested in a subject for which a technical committee has been established has the right to be represented on that committee. International organizations, governmental and non-governmental, in liaison with ISO, also take part in the work. ISO collaborates closely with the International Electrotechnical Commission (IEC) on all matters of electrotechnical standardization.

The procedures used to develop this document and those intended for its further maintenance are described in the ISO/IEC Directives, Part 1. In particular, the different approval criteria needed for the different types of ISO documents should be noted. This document was drafted in accordance with the editorial rules of the ISO/IEC Directives, Part 2 (see www.iso.org/directives).

Attention is drawn to the possibility that some of the elements of this document may be the subject of patent rights. ISO shall not be held responsible for identifying any or all such patent rights. Details of any patent rights identified during the development of the document will be in the Introduction and/or on the ISO list of patent declarations received (see www.iso.org/patents).

Any trade name used in this document is information given for the convenience of users and does not constitute an endorsement.

For an explanation of the voluntary nature of standards, the meaning of ISO specific terms and expressions related to conformity assessment, as well as information about ISO's adherence to the World Trade Organization (WTO) principles in the Technical Barriers to Trade (TBT), see www.iso.org/iso/foreword.html.

This document was prepared by Technical Committee ISO/TC 84, *Devices for administration of medicinal products and catheters*, in collaboration with the European Committee for Standardization (CEN) Technical Committee CEN/TC 205, *Non-active medical devices,* in accordance with the Agreement on technical cooperation between ISO and CEN (Vienna Agreement).

This third edition cancels and replaces the second edition (ISO 11608-2:2012), which has been technically revised.

The main changes are as follows:

— terminology for ‘needles’ was updated throughout the document and in the title of the document to ‘double-ended pen needles’ in order to more precisely describe the subject of the document;

— where possible, references to other parts of ISO 11608 (all parts) have been made instead of repeating the content in this document (for example, conditions for preconditioning). Additionally, changes have been made to align with ISO 11608-1 (e.g. sample sizes and test case matrix) ;

— content within this document has been reorganized to create a separate clause for symbols and abbreviated terms, to delineate needle tube requirements, double-ended pen needle requirements and requirements for functional compatibility with needle-based injection systems (NISs), to group the test method sections into defined sections;

— new figures have been added to more precisely illustrate the dimensions of the double-ended pen needle and test gauge referred to in this document;

— requirements for biocompatibility and pyrogenicity introduced and acceptance criteria for flow rate through the needle have been added;

— testing requirements necessary to establish functional compatibility between a specific NIS and a specific double-ended pen needle were revised to include dose delivery and needle hub removal force testing;

© ISO 2022 – All rights reserved

Documents
Document Sharing Hub
Full document details: BS EN ISO 11608-2:2022

— new annexes have been introduced which provide an example method for testing needle bond force (Annex B) and additional background for the requirements in this document (Annex C).

A list of all parts in the ISO 11608 series can be found on the ISO website.

Any feedback or questions on this document should be directed to the user's national standards body. A complete listing of these bodies can be found at www.iso.org/members.html.

© ISO 2022 – All rights reserved
Documents
Document Sharing Hub
Full document details: BS EN ISO 11608-2:2022

Introduction

This document covers sterile double-ended needles intended for single use in conjunction with needle-based injection systems (e.g. pen injectors). These needles are often referred to as pen needles.

The devices described in this document are designed to be used with the devices described in ISO 11608-1 and ISO 11608-3. This document is intended to be used in conjunction with ISO 11608-1.

The first edition of this document, i.e. ISO 11608-2:2000, introduced the concept of interchangeability and the labelling designations "Type A" (i.e., interchangeable) and "non-Type A" for needles and container closure systems. Since its promulgation, experience has shown that the complexity of these systems makes it very difficult to ensure functional compatibility as defined in the different clauses of this document, particularly when products are made by different manufacturers and the design is not verified as a system. Based on this experience, it is believed that the Type A designation does not represent adequate guidance to the user in making decisions on the compatibility of needles and container closures with specific needle-based injection systems (NIS). As such, the labelling designation "Type A" has been removed.

The second edition of this document, i.e. ISO 11608-2:2012, addressed functional compatibility of the system through testing in accordance with Clause 11 (functional compatibility testing is in Clause 9 in this document). Flow rate was introduced as a new parameter. The sampling plans for inspection selected for this document and outlined in ISO 11608-1 are intended to verify the design, at a high confidence level. The sampling plan does not replace the more general manufacturing quality systems, including lot release, which appear in quality management systems, e.g. ISO 9001 or ISO 13485.

This document refers to ISO 11608-1 for dose accuracy requirements for functional compatibility and includes requirements for double-ended pen needle device adapted from ISO 7864:2016 and new requirements for cleanliness (as part of the freedom from defects requirement), biocompatibility and pyrogenicity testing. After the experience gained through testing for functional compatibility with the second edition of this document, the testing approach was reassessed to ensure that the appropriate tests were included. Following a rigorous review of anonymized dose accuracy data generated by manufacturers over several years, assessing the relationship of dose accuracy and the flow rate through the pen needle, it was determined that there is no relationship between the pen needle flow rate and dose accuracy. This further supports the understanding that the primary contributors to dose accuracy in the NIS system are the NIS and the cartridge.

The needle provides the fluid path from the cartridge to the subcutaneous tissue and its influence on dose accuracy is mainly affected by the correct position of the needle bevel inside the cartridge, a possible leakage and indirectly over the injection force and injection time by the flow rate. The inner diameter has an influence on the time that is needed to deliver the entire volume but not directly to the precision of the dosage. Additionally, a prescribed holding time may be specified in the NIS IFU, which provides for completion of dose delivery during expansion and or relaxation of soft parts within the NIS and cartridge. Therefore, the testing requirements necessary to establish functional compatibility between a specific NIS and a specific pen needle were revised in this edition to include dose delivery and needle hub removal force testing. Dose delivery may be demonstrated either through dose accuracy testing or through confirmation of dose delivery, which includes demonstrating that the needle bevel is positioned inside the cartridge, visual verification that the dose is expelled and inspection for absence of leakage at the base of the non-patient end of the cannula.

© ISO 2022 – All rights reserved

Documents
Document Sharing Hub
Full document details: BS EN ISO 11608-2:2022

Documents
Document Sharing Hub

Needle-based injection systems for medical use — Requirements and test methods —

Part 2: Double-ended pen needles

1 Scope

This document specifies requirements and test methods for single-use, double-ended, sterile needles intended to be used with some needle-based injection systems (NISs) that use a non-integrated double-ended needle according to ISO 11608-1.

This document is not applicable to the following:

— needles for dental use;

— pre-attached syringe needles;

— hypodermic needles;

— needles intended for different routes of administration (e.g. intravenous, intrathecal, intraocular);

— materials that form the medicinal product contact surfaces of the primary container closure.

However, while this document is not intended to directly apply to these needle products, it does contain requirements and tests methods that can be used to help design and evaluate them.

NOTE Needles provided by the manufacturer integrated into the fluid path or container are covered in ISO 11608-3, and hypodermic needles provided separately are covered in ISO 7864.

2 Normative references

The following documents are referred to in the text in such a way that some or all of their content constitutes requirements of this document. For dated references, only the edition cited applies. For undated references, the latest edition of the referenced document (including any amendments) applies.

ISO 9626:2016, *Stainless steel needle tubing for the manufacture of medical devices — Requirements and test methods*

ISO 10993-1, *Biological evaluation of medical devices — Part 1: Evaluation and testing within a risk management process*

ISO 10993-11, *Biological evaluation of medical devices — Part 11: Tests for systemic toxicity*

ISO 11608-1:2022, *Needle-based injection systems for medical use — Requirements and test methods — Part 1: Needle-based injection systems*

ISO 11608-3:2022, *Needle-based injection systems for medical use — Requirements and test methods — Part 3: Containers and integrated fluid paths*

3 Terms and definitions

For the purposes of this document, the terms and definitions given in ISO 11608-1 and the following apply.

© ISO 2022 – All rights reserved

Documents
Document Sharing Hub
Full document details: BS EN ISO 11608-2:2022

ISO and IEC maintain terminology databases for use in standardization at the following addresses:

— ISO Online browsing platform: available at https://www.iso.org/obp

— IEC Electropedia: available at https://www.electropedia.org/

3.1
double-ended pen needle
single-use, double-ended, sterile needles with attachment system specific for some NISs which use a non-integrated needle

Note 1 to entry: See Figure 1.

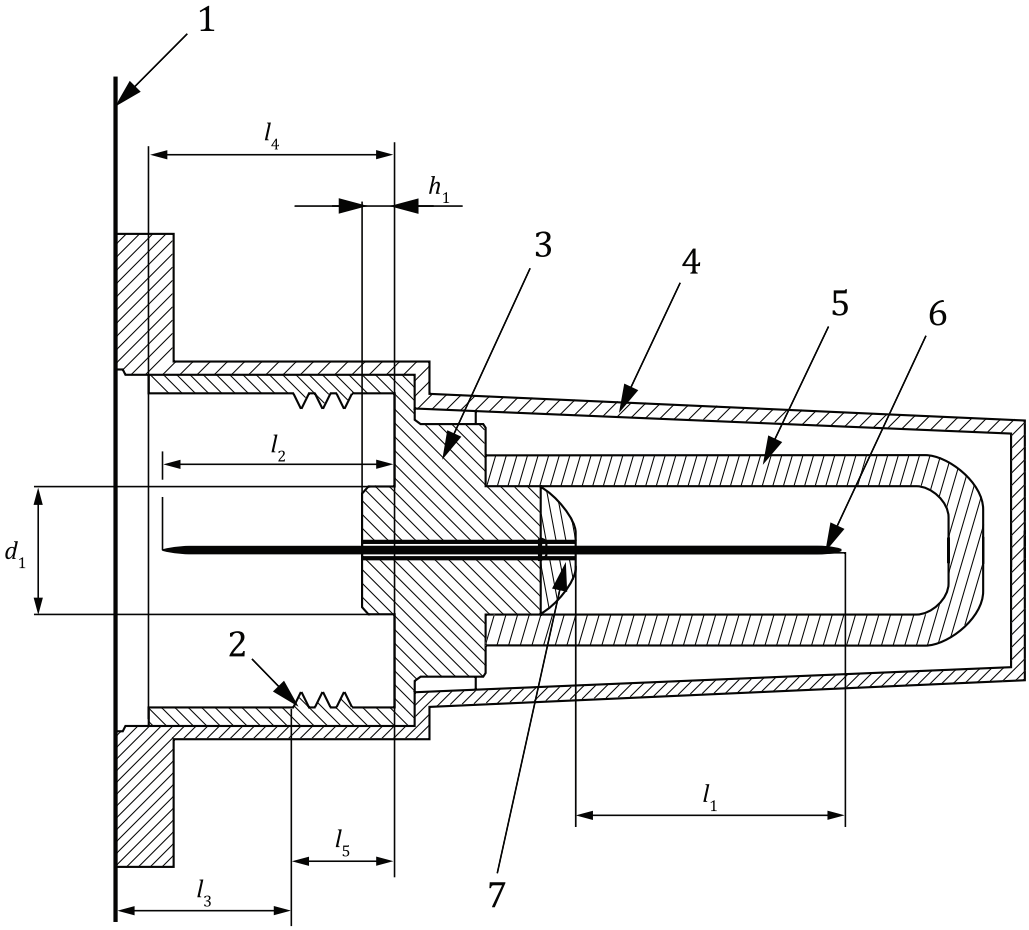

Key

1	*seal* (3.2)	l_1	patient-end needle length
2	means of needle assembly attachment	l_2	cartridge-end needle length
3	needle hub	l_3	distance from the surface of the seal to the underside of the thread
4	needle container	l_4	depth of the needle hub
5	needle shield (if included)	l_5	distance from the underside of the thread to the surface of the hub base
6	needle tube	h_1	needle hub union length
7	jointing medium (if used)	d_1	diameter of needle hub union

Figure 1 — Example presentation of double-ended pen needle assembly

3.2
seal
removable barrier which maintains the sterility of the needle inside the needle container

© ISO 2022 – All rights reserved
Documents
Document Sharing Hub
Full document details: BS EN ISO 11608-2:2022

3.3
unit packaging
needle container, together with the *seal* (3.2) forming the packaging of the device, that maintains the sterility of the needle

3.4
user packaging
device or collection of devices in their respective *unit packaging* (3.3) provided to the user

4 Symbols

$\alpha_{1,\min}$	Angular distance
λ	Average wavelength of the visual light
C	Calibration constant (used for calculating flow rate using the Extended Hagen–Poiseuille equation)
$d_{\max}$	Maximum allowable dislocation
D_{pupil}	Diameter of the pupil of the eye, where the light is deflected
D_{out}	Nominal outside diameter of the needle tube, expressed in millimetres
$D_{\text{out,hub}}$	Outer diameter of the needle tube at the hub (for tapered needles)
$D_{\text{out,tip}}$	Outer diameter of needle tube at the first full diameter from the tip (for tapered needles)
Q	Flow rate
ρ	Density of the fluid
$Q_{\min}$	Minimum flow rate
U	Resolution of the eye
ΔP	Pressure difference
r	Inner radius (equal to ½ of the inner diameter)
η	Viscosity of the test fluid
V_{high}	Dose pre-set as ≥90 % of the NIS maximum dosage (expressed as a volume, in millilitres)
V_{low}	Dose pre-set as ≤10 % of the NIS maximum dosage (expressed as a volume, in millilitres) NOTE V_{low} can be set as equal to the minimum dosage of the NIS.

5 Requirements

5.1 Needle tube requirements

5.1.1 General

The following requirements relate to the needle tube component included in the double-ended pen needle device.

© ISO 2022 – All rights reserved

Documents
Document Sharing Hub
Full document details: BS EN ISO 11608-2:2022