BS EN ISO 11819-2:2017

BSI Standards Publication

Acoustics — Measurement of the influence of road surfaces on traffic noise

Part 2: The close-proximity method

Documents
Document Sharing Hub

Full document details: BS EN ISO 11819-2:2017

National foreword

This British Standard is the UK implementation of EN ISO 11819-2:2017.

The UK participation in its preparation was entrusted by Technical Committee EH/1, Acoustics, to Subcomittee EH/1/2, Transport noise.

A list of organizations represented on this subcommittee can be obtained on request to its secretary.

This publication does not purport to include all the necessary provisions of a contract. Users are responsible for its correct application.

© The British Standards Institution 2017
Published by BSI Standards Limited 2017

ISBN 978 0 580 81122 7

ICS 17.140.30; 93.080.20

Compliance with a British Standard cannot confer immunity from legal obligations.

This British Standard was published under the authority of the Standards Policy and Strategy Committee on 30 June 2017.

Amendments/corrigenda issued since publication

Date	Text affected

Documents
Document Sharing Hub

Full document details: BS EN ISO 11819-2:2017

EUROPEAN STANDARD

NORME EUROPÉENNE

EUROPÄISCHE NORM

EN ISO 11819-2

April 2017

ICS 17.140.30

English Version

Acoustics — Measurement of the influence of road surfaces on traffic noise — Part 2: The close-proximity method (ISO 11819-2:2017)

Acoustique — Méthode de mesurage de l'influence des revêtements de chaussées sur le bruit émis par la circulation — Partie 2: Méthode de proximité immédiate (ISO 11819-2:2017)

Akustik — Messung des Einflusses von Straßenoberflächen auf Verkehrsgeräusche — Teil 2: Nahfeldmessverfahren (ISO 11819-2:2017)

This European Standard was approved by CEN on 19 January 2017.

CEN members are bound to comply with the CEN/CENELEC Internal Regulations which stipulate the conditions for giving this European Standard the status of a national standard without any alteration. Up-to-date lists and bibliographical references concerning such national standards may be obtained on application to the CEN-CENELEC Management Centre or to any CEN member.

This European Standard exists in three official versions (English, French, German). A version in any other language made by translation under the responsibility of a CEN member into its own language and notified to the CEN-CENELEC Management Centre has the same status as the official versions.

CEN members are the national standards bodies of Austria, Belgium, Bulgaria, Croatia, Cyprus, Czech Republic, Denmark, Estonia, Finland, Former Yugoslav Republic of Macedonia, France, Germany, Greece, Hungary, Iceland, Ireland, Italy, Latvia, Lithuania, Luxembourg, Malta, Netherlands, Norway, Poland, Portugal, Romania, Serbia, Slovakia, Slovenia, Spain, Sweden, Switzerland, Turkey and United Kingdom.

EUROPEAN COMMITTEE FOR STANDARDIZATION
COMITÉ EUROPÉEN DE NORMALISATION
EUROPÄISCHES KOMITEE FÜR NORMUNG

CEN-CENELEC Management Centre: Avenue Marnix 17, B-1000 Brussels

© 2017 CEN All rights of exploitation in any form and by any means reserved worldwide for CEN national Members

Ref. No. EN ISO 11819-2:2017: E

Documents
Document Sharing Hub

Full document details: BS EN ISO 11819-2:2017

European foreword

This document (EN ISO 11819-2:2017) has been prepared by Technical Committee ISO/TC 43 "Acoustics" in collaboration with Technical Committee CEN/TC 227 "Road materials" the secretariat of which is held by DIN.

This European Standard shall be given the status of a national standard, either by publication of an identical text or by endorsement, at the latest by October 2017, and conflicting national standards shall be withdrawn at the latest by October 2017.

Attention is drawn to the possibility that some of the elements of this document may be the subject of patent rights. CEN [and/or CENELEC] shall not be held responsible for identifying any or all such patent rights.

According to the CEN-CENELEC Internal Regulations, the national standards organizations of the following countries are bound to implement this European Standard: Austria, Belgium, Bulgaria, Croatia, Cyprus, Czech Republic, Denmark, Estonia, Finland, Former Yugoslav Republic of Macedonia, France, Germany, Greece, Hungary, Iceland, Ireland, Italy, Latvia, Lithuania, Luxembourg, Malta, Netherlands, Norway, Poland, Portugal, Romania, Serbia, Slovakia, Slovenia, Spain, Sweden, Switzerland, Turkey and the United Kingdom.

Endorsement notice

The text of ISO 11819-2:2017 has been approved by CEN as EN ISO 11819-2:2017 without any modification.

Documents
Document Sharing Hub
Full document details: BS EN ISO 11819-2:2017

Contents

Page

Foreword ... **v**

Introduction ... **vi**

1 Scope ... **1**

2 Normative references ... **2**

3 Terms and definitions ... **2**
3.1 Road and pavement related definitions ... 2
3.2 Measurement methods and equipment ... 2
3.3 Acoustic quantities and symbols ... 3
3.4 Symbols used for correction terms ... 4

4 Symbols and abbreviated terms ... **4**

5 Measurement principle ... **6**

6 Measuring instruments ... **6**
6.1 Sound level instrumentation ... 6
6.2 Frequency analysis instrumentation ... 7
6.3 Sound calibration instrumentation ... 7
6.4 Vehicle speed measuring instrumentation ... 7
6.5 Position monitoring instrumentation ... 7
6.6 Temperature measuring instrumentation ... 7
6.7 Tyre load measuring equipment ... 7
6.8 Inflation pressure measuring equipment ... 7
6.9 Verification of measuring system and measuring instrumentation ... 7

7 Test sites ... **8**

8 Meteorological conditions ... **8**
8.1 Wind ... 8
8.2 Temperature and other weather-related issues ... 8

9 Test vehicle ... **9**
9.1 General design ... 9
9.2 Microphone positions and mounting ... 9
9.3 Performance requirements and conformity of the test vehicle ... 11
9.4 Reference tyres ... 11
9.5 Tyre rubber hardness ... 11
9.6 Tyre mounting ... 11
9.7 Tyre run-in ... 12

10 Measurement procedure ... **12**
10.1 Preparations for measurements ... 12
10.2 Measurement of sound ... 12
10.3 Procedure for study of typical road section ... 12
10.4 Minimum number of runs for very short road sections ... 13
10.5 Lateral position on the road ... 13
10.6 Longitudinal position on the road ... 13
10.7 Consideration of disturbing noise ... 13
10.8 Test vehicle speed ... 13
10.8.1 Reference speeds ... 13
10.8.2 Test speed and acceptable deviations ... 13
10.9 Tyre loads ... 14
10.10 Tyre inflation ... 14
10.11 Temperature measurement ... 14
10.11.1 General ... 14
10.11.2 Air temperature ... 15
10.11.3 Road surface temperature (optional) ... 15

AVA Documents
Document Sharing Hub

© ISO 2017 – All rights reserved

Full document details: BS EN ISO 11819-2:2017

10.12 Overview and summary ... 15

11 Analysis procedure ... 15
11.1 Definition of steps in the calculation process ... 15
11.2 Results expressed as overall levels ... 16
11.2.1 General ... 16
11.2.2 Case A ... 17
11.2.3 Case B ... 17
11.2.4 Expression of CPX levels ... 17
11.3 Results expressed as one-third-octave-band levels ... 18
11.3.1 General ... 18
11.3.2 Case A ... 18
11.3.3 Case B ... 18
11.4 Correction for analysis of spectral levels ... 18
11.5 Acoustic variability ... 18

12 Measurement uncertainty assessment according to ISO/IEC Guide 98-3 ... 19

13 Repeatability and reproducibility: System comparison according to ISO 5725-2 ... 21

14 Test report ... 21

Bibliography ... 24

Annex A (normative) **Certification of the test vehicle ... 26**

Annex B (normative) **Averaging within each road segment ... 32**

Annex C (informative) **Detailed explanation of the calculation procedure ... 34**

Annex D (informative) **Applicability of ISO 11819 methods ... 39**

Annex E (informative) **Guidelines for design and use of the test vehicle ... 41**

Annex F (informative) **Guidelines for measurements ... 45**

Annex G (informative) **Application of the CPX method for surveying large road networks ... 47**

Annex H (informative) **Application of the CPX method for other objectives ... 50**

Annex I (informative) **Summary of measurement parameters ... 51**

Annex J (informative) **Validity and stability of the method ... 52**

Annex K (informative) **Measurement uncertainty ... 55**

Annex L (informative) **Reference road surface ... 58**

Annex M (informative) **Calculation of close-proximity sound indices ... 60**

Annex O (informative) **Example of test report ... 63**

© ISO 2017 – All rights reserved

Documents
Document Sharing Hub

Full document details: BS EN ISO 11819-2:2017

Foreword

ISO (the International Organization for Standardization) is a worldwide federation of national standards bodies (ISO member bodies). The work of preparing International Standards is normally carried out through ISO technical committees. Each member body interested in a subject for which a technical committee has been established has the right to be represented on that committee. International organizations, governmental and non-governmental, in liaison with ISO, also take part in the work. ISO collaborates closely with the International Electrotechnical Commission (IEC) on all matters of electrotechnical standardization.

The procedures used to develop this document and those intended for its further maintenance are described in the ISO/IEC Directives, Part 1. In particular the different approval criteria needed for the different types of ISO documents should be noted. This document was drafted in accordance with the editorial rules of the ISO/IEC Directives, Part 2 (see www.iso.org/directives).

Attention is drawn to the possibility that some of the elements of this document may be the subject of patent rights. ISO shall not be held responsible for identifying any or all such patent rights. Details of any patent rights identified during the development of the document will be in the Introduction and/or on the ISO list of patent declarations received (see www.iso.org/patents).

Any trade name used in this document is information given for the convenience of users and does not constitute an endorsement.

For an explanation on the voluntary nature of standards, the meaning of ISO specific terms and expressions related to conformity assessment, as well as information about ISO's adherence to the World Trade Organization (WTO) principles in the Technical Barriers to Trade (TBT) see the following URL: www.iso.org/iso/foreword.html.

This document was prepared by Technical Committee ISO/TC 43, *Acoustics*, Subcommittee SC 1, *Noise*.

A list of all parts in the ISO 11819 series can be found on the ISO website.

© ISO 2017 – All rights reserved

Documents
Document Sharing Hub
Full document details: BS EN ISO 11819-2:2017

Introduction

The emission and propagation of road traffic noise greatly depends on road surface characteristics, notably on texture, flow resistivity and acoustic absorption. All these characteristics influence the generation of tyre/road noise and, in addition, the acoustic absorption can influence the propagation of sound, particularly when the propagation takes place close to the surface. Power unit noise, which is usually generated at a greater height above the road surface than tyre/road noise, may also be affected during propagation by the porosity characteristics of the road surface. These effects lead to differences in sound pressure levels, associated with a given traffic flow and composition, from different road surfaces of up to 15 dB, which can have a substantial impact on the environmental quality alongside a road.

It is therefore important to be able to measure the influence of surface characteristics on tyre/road noise by a standardized method. Within the constraints of this method, this document offers an objective rating of the road characteristics to satisfy a need expressed by road planners, road administrators, contractors, manufacturers of so-called “low-noise surfaces” and other parties concerned with the control of road traffic noise.

A method satisfying the needs expressed in the foregoing, but having serious practical constraints, appears in ISO 11819-1. That method, called the statistical pass-by (SPB) method, is intended for use essentially for two main purposes. It can be used: first, to classify surfaces in typical and good condition as a type according to their influence on traffic noise (surface classification); and second, to evaluate the influence on traffic noise of different surfaces at particular sites irrespective of condition and age. However, due to severe requirements on the acoustical environment at the measurement site, the method cannot generally be used for approval of new or rebuilt surfaces at any arbitrary location. In addition, the SPB method has a number of other practical limitations, which are outlined in Annex D.

The method specified in this document, together with ISO/TS 11819-3, complements the SPB method in applications where the latter has limitations.

© ISO 2017 – All rights reserved
Documents
Document Sharing Hub
Full document details: BS EN ISO 11819-2:2017

INTERNATIONAL STANDARD **ISO 11819-2:2017(E)**

Acoustics — Measurement of the influence of road surfaces on traffic noise —

Part 2: The close-proximity method

1 Scope

This document specifies a method of evaluating different road surfaces with respect to their influence on traffic noise, under conditions when tyre/road noise dominates. The interpretation of the results applies to free-flowing traffic travelling on essentially level roads at constant speeds of 40 km/h and upwards, in which cases tyre/road noise is assumed to dominate (although in some countries it is possible that tyre/road noise does not dominate at 40 km/h when the proportion of heavy vehicles is high). For other driving conditions where traffic is not free-flowing, such as at junctions or under heavy acceleration, and where the traffic is congested, the influence of the road surface on noise emission is more complex. This is also the case for roads with high longitudinal gradients and a high proportion of heavy vehicles.

A standard method for comparing noise characteristics of road surfaces gives road and environment authorities a tool for establishing common practices or limits as to the use of surfacings meeting certain noise criteria. However, it is not within the scope of this document to suggest such criteria.

ISO 11819-1 defines another method: the statistical pass-by (SPB) method. The close-proximity (CPX) method specified in the present document has the same main objectives as the SPB method, but is intended to be used specifically in applications that are complementary to it, such as:

— noise characterization of road surfaces at almost any arbitrary site, with the main purpose of checking compliance with a surface specification (an example for conformity of production is suggested in Reference [1]);

— checking the acoustic effect of maintenance and condition, e.g. wear of and damage to surfaces, as well as clogging and the effect of cleaning of porous surfaces;

— checking the longitudinal and lateral homogeneity of a road section;

— the development of quieter road surfaces and research on tyre/road interaction.

NOTE This document does not describe the conditions of application for formal purposes of the measurement with the CPX method. Such conditions may be defined in other standards or legal texts. However, suggestions for the applicability of ISO 11819-1 and this document are provided in Annex D.

Measurements with the CPX method are faster and more practical than with the SPB method, but are more limited in the sense that it is relevant only in cases where tyre/road noise dominates and power unit noise can be neglected. Furthermore, it cannot take heavy vehicle tyre/road noise into account as fully as the SPB method can, since it uses a light truck tyre as a proxy for heavy vehicle tyres and does not take power unit noise into account.

The CPX method specified in this document is intended to measure the properties of road surfaces, not the properties of tyres. If the method is used for research purposes, to provide an indication of differences between tyres, the loads and inflations would normally be adjusted to other values than specified in this document.

© ISO 2017 – All rights reserved

Documents
Document Sharing Hub
Full document details: BS EN ISO 11819-2:2017

2 Normative references

The following documents are referred to in the text in such a way that some or all of their content constitutes requirements of this document. For dated references, only the edition cited applies. For undated references, the latest edition of the referenced document (including any amendments) applies.

ISO 5725-2, *Accuracy (trueness and precision) of measurement methods and results — Part 2: Basic method for the determination of repeatability and reproducibility of a standard measurement method*

ISO 11819-1, *Acoustics — Measurement of the influence of road surfaces on traffic noise — Part 1: Statistical Pass-By method*

ISO/TS 11819-3, *Acoustics — Measurement of the influence of road surfaces on traffic noise — Part 3: Reference tyres*

ISO/TS 13471-1, *Acoustics — Temperature influence on tyre/road noise measurement — Part 1: Correction for temperature when testing with the CPX method*

IEC 60942, *Electroacoustics — Sound calibrators*

IEC 61260-1, *Electroacoustics — Octave-band and fractional-octave-band filters — Part 1: Specifications*

IEC 61672-1, *Electroacoustics — Sound level meters — Part 1: Specifications*

ISO/IEC Guide 98-3, *Uncertainty of measurement — Part 3: Guide to the expression of uncertainty in measurement (GUM:1995)*

3 Terms and definitions

For the purposes of this document, the terms and definitions given in ISO 11819-1 and the following apply.

ISO and IEC maintain terminological databases for use in standardization at the following addresses:

— IEC Electropedia: available at http://www.electropedia.org/

— ISO Online browsing platform: available at http://www.iso.org/obp

3.1 Road and pavement related definitions

3.1.1
road section
total stretch of the road lane subject to testing

3.1.2
road segment
part of a road section, being 20 m long and intended for normalization of sound pressure levels from the actual speed on that segment to a certain reference speed

3.2 Measurement methods and equipment

3.2.1
statistical pass-by method
SPB method
measurement procedure designed to evaluate vehicle and traffic noise generated on different sections of road surface under specific traffic conditions

Note 1 to entry: The measurements are taken from a great number of vehicles operating normally on the road. Results obtained using this procedure are normalized to standard speeds according to the category or type of road being considered. The method is specified in ISO 11819-1.

© ISO 2017 – All rights reserved
Documents
Document Sharing Hub
Full document details: BS EN ISO 11819-2:2017

3.2.2
reference tyres
test tyres specified for the purpose of representing certain features in tyre/road sound emission, designed and constructed for use in this method with specified and reproducible standard properties

Note 1 to entry: The reference tyres are specified in ISO/TS 11819-3.

3.3 Acoustic quantities and symbols

3.3.1
close-proximity level
CPX level
L_{CPX}
time-averaged A-weighted sound pressure level (SPL) of the tyre/road noise as determined by the CPX method, either broadband or spectral bands, as required

Note 1 to entry: The CPX level is expressed in decibels. In order to provide more information, additional suffixes are used; see Table 1.

3.3.2
CPX level for passenger cars and other light vehicles
$L_{\mathrm{CPX:P}}$
A-weighted sound pressure level characterizing the road surface under test, which is based on the tyre/road sound pressure levels of one or more tyres representative of passenger car tyres

Note 1 to entry: The $L_{\mathrm{CPX:P}}$ is expressed in decibels. Passenger car tyres are denoted P1, P2 … .

3.3.3
CPX level for heavy vehicles
$L_{\mathrm{CPX:H}}$
A-weighted sound pressure level characterizing the road surface under test, which is based on the tyre/road sound pressure levels of one or more tyres representative of heavy vehicle tyres

Note 1 to entry: The $L_{\mathrm{CPX:H}}$ is expressed in decibels. Heavy vehicle tyres are denoted H1, H2 … .

3.3.4
CPX index
$L_{\mathrm{CPX:I}}$
index composed of the weighted average of the CPX level for passenger cars and other light vehicles ($L_{\mathrm{CPX:P}}$) and CPX level for heavy vehicles ($L_{\mathrm{CPX:H}}$)

Note 1 to entry: The $L_{\mathrm{CPX:I}}$ is expressed in decibels. The method is intended to describe performance of road surfaces for a certain traffic composition in a similar way to the SPB method in ISO 11819-1, although the numerical values for a given speed are higher. More information on the calculation of CPX indices is given in Annex M.

3.3.5
acoustic variability due to road surface inhomogeneities
s_{t}
standard deviation of the A-weighted sound pressure levels over all segments, when using reference tyre t

Note 1 to entry: The acoustic variability is expressed in decibels. This variability is normally dominated by road surface variations, although random uncertainties could add a little. Measurement speed and wheel tracks normally do not influence this value significantly. This measure is, therefore, considered to be an indication of road surface homogeneity as far as noise properties are concerned.

© ISO 2017 – All rights reserved

Documents
Document Sharing Hub
Full document details: BS EN ISO 11819-2:2017

3.4 Symbols used for correction terms

3.4.1
measured speed
v
actual speed during a measurement

Note 1 to entry: The measured speed is expressed in kilometres per hour.

3.4.2
reference speed
v_{ref}
preferred speed for measurement

Note 1 to entry: The reference speed is expressed in kilometres per hour. Most commonly used reference speeds are 50 km/h, 80 km/h and 110 km/h, but alternative speeds may be used if required for technical, safety or legislative reasons.

3.4.3
speed coefficient
B
coefficient determining the speed dependence of the sound pressure levels, normally used for correction of the sound pressure level to a certain reference speed

Note 1 to entry: The correction for deviations from the reference speed is given by the expression $B \cdot \lg(v/v_{\mathrm{ref}})$, expressed in decibels, where B is dimensionless. Values of B for specific pavements are given in 11.1 d).

3.4.4
temperature coefficient
γ_{t}
coefficient used for correcting CPX level for the effect of temperature for tyre t

Note 1 to entry: The temperature coefficient is expressed in decibels per degree Celcius.

3.4.5
rubber hardness coefficient
β_{t}
coefficient used for correcting CPX level for the effect of tread rubber hardness of tyre t

Note 1 to entry: The rubber hardness coefficient is expressed in decibels per Shore A. Refer to 11.1 f) for application.

3.4.6
device-dependent correction for sound reflections
$C_{\mathrm{d},f}$
correction for individual measuring devices in one-third-octave bands from 315 Hz to 5 000 Hz with the centre frequency f, to account for deviations from acoustic hemi-free-field conditions

Note 1 to entry: The device correction for sound reflections is expressed in decibels. Information on the determination of $C_{\mathrm{d},f}$ is given in A.2.

4 Symbols and abbreviated terms

Table 1 lists the symbols used in this document. All acoustic variables are A-weighted.

© ISO 2017 – All rights reserved
Documents
Document Sharing Hub
Full document details: BS EN ISO 11819-2:2017

Table 1 — Symbols and abbreviated terms used in this document and their value or unit

Symbol	Value/unit	Explanation
$L_{\mathrm{CPX:t},v_{\mathrm{ref}}}$	dB	Measure of the acoustic properties of the tested road section, for tyre t, at the reference speed v_{ref}
$L'_{\mathrm{CPX:t},w,r,i,f}$	dB	Energy-based average spectrum at the microphone positions m = 1 and m = 2 (for the subscript symbols, see below)
$L_{\mathrm{CPX:t},w,r,i,f,m,v_{\mathrm{ref}}}$	dB	Time-averaged tyre/road SPL ("CPX level") over the time it takes to run a road segment (20 m)
$L_{\mathrm{CPX:P},v_{\mathrm{ref}}}$	dB	Measure of the acoustic properties of the tested road section, for tyre(s) "P" representing passenger cars and other light vehicles, at the reference speed, v_{ref}
$L_{\mathrm{CPX:H},v_{\mathrm{ref}}}$	dB	Measure of the acoustic properties of the tested road section, for tyre(s) "H" representing heavy vehicles, at the reference speed, v_{ref}
$L_{\mathrm{CPX:I},v_{\mathrm{ref}}} = 0{,}5 \cdot L_{\mathrm{CPX:P},v_{\mathrm{ref}}} + 0{,}5 \cdot L_{\mathrm{CPX:H},v_{\mathrm{ref}}}$	dB	"CPX index" representing the overall acoustic properties of the tested road section, for tyre(s) representing light and heavy vehicles combined (with equal weighting), at the reference speed, v_{ref}
B	Dimensionless	Speed coefficient; i.e. increase in CPX level with tenfold increase in speed, to be able to correct for deviations from the reference speed, v_{ref}
$C_{\mathrm{d},f}$	dB	Device correction term (frequency dependent) to account for deviations from free field conditions
γ_{t}	dB/°C	Temperature coefficient for correction for tyre t to account for deviations from reference temperature of 20 °C. The value is negative for tyres P1 and H1
β_{t}	dB/Shore A	Rubber hardness coefficient for correction for tyre t to account for deviations from a reference hardness
f	315 Hz, … 5 000 Hz	One-third-octave-band centre frequency
i	1, 2, 3 …	Road segment number
m	1, 2 3, 4, 5, 6	Front and rear mandatory microphone positions Optional microphone positions
n	1, 2, 3 …	Total number of runs, n_r, wheel tracks, n_w, or road segments, n_i
r	1, 2, 3 …	Run number
H_{A}		Rubber hardness in durometer type A of test tyre tread
H_{ref}		Reference rubber hardness in durometer type A
s_{t}	dB	Acoustic variability; a measure of road surface homogeneity
t	P H	Tyre type defined for testing Passenger car tyres Heavy vehicle tyres or approximate proxy
T_i	°C	Air temperature at road segment i (index not needed if continuous temperature measurements are not made)
v	km/h	Actual measured speed

© ISO 2017 – All rights reserved

Documents
Document Sharing Hub
Full document details: BS EN ISO 11819-2:2017

Symbol	Value/unit	Explanation
v_{ref}	km/h	Preferred nominal speed for measurement; thus a reference speed used when reporting results
w	1, 2, 3, …	The wheel tracks in a lane where test tyres are rolling. Track number 1 is closest to the road shoulder, 2 is the opposite wheel track within that same lane; 3, 4, and so on are additional tracks

5 Measurement principle

In the CPX method, the average A-weighted SPLs emitted by specified tyres are measured over an arbitrary or a specified road distance, together with the vehicle testing speed, by at least two microphones located close to the tyres. For this purpose, a special test vehicle, which is either self-powered or towed behind another vehicle, is used. Reference tyres are mounted on the test vehicle, either one by one or both at the same time. Two uniquely different reference tyres have been selected in order to represent the tyre/road characteristics which are to be studied.

Although the microphones are positioned in close proximity to the source of tyre/road noise, a substantial part of the propagation effect associated with acoustically absorptive surfaces is actually included in the microphone signal. This is demonstrated by model calculations and the results of the CPX validation experiment (References [2], [3]). See Annex D for further information.

The tests are performed with the intention of determining a tyre/road sound pressure level, here referred to as the CPX level, L_{CPX}, at one or more of the nominated reference speeds. This can be achieved by testing at a reference speed or by normalizing for speed deviations.

For each reference tyre and each individual test run with that tyre, the average sound pressure levels over short measuring distances (segments of 20 m each), together with the corresponding vehicle speeds, are recorded. The sound pressure level of each segment is normalized to a reference speed by a simple correction procedure. Averaging is then carried out according to the purpose of the measurement, i.e. measuring a particular segment or a number of consecutive segments (a section).

The CPX level, $L_{CPX:t,v_{ref}}$, is the resulting average sound pressure level for the two mandatory microphones at the reference speed, v_{ref} for reference tyre t, where t is P or H.

Where both close-proximity sound levels have been determined, the close-proximity sound index $L_{CPX:I}$ is the average of $L_{CPX:P}$ and $L_{CPX:H}$ with equal weight given to the two indices. $L_{CPX:I}$ is intended for single value comparison.

There are some issues in the method which deserve special caution when applying this method, especially under circumstances that are not the most common. Annex J provides a discussion of such issues.

6 Measuring instruments

6.1 Sound level instrumentation

Within the minimum frequency range of 315 Hz to 5 000 Hz, the sound level meter or the equivalent measuring system shall meet the requirements of IEC 61672-1, class 1. The microphones shall be of the "free-field" type.

An appropriate windscreen shall be used having a diameter of at least 90 mm. The sound properties of windscreens will deteriorate as the material is progressively exposed to dirt. It is therefore good practice to check the performance of the windscreens frequently and to replace them with new, fresh material when they show patterns of dirt coverage.

© ISO 2017 – All rights reserved
Documents
Document Sharing Hub
Full document details: BS EN ISO 11819-2:2017

6.2 Frequency analysis instrumentation

Frequency analysis of the measured sound using one-third-octave-band resolution is mandatory. The range 315 Hz to 5 000 Hz (centre frequencies of one-third-octave bands) is the minimum range to be covered. The one-third-octave-band filters shall conform to IEC 61260-1.

6.3 Sound calibration instrumentation

At the beginning of the measurements, and following any warm-up time specified by the manufacturer, the overall sensitivity of the sound level meters or the equivalent measuring system (including the microphone) shall be checked. If necessary, adjust it according to the manufacturer's instructions. This may require use of a standard sound source, such as a calibrator or pistonphone. This check shall be repeated at the end of the measurements, and at least after every 4 h of operation. Any deviations shall be recorded in the test report. If the calibration readings differ by more than 0,5 dB between the checks, all intermediate measurements shall be considered invalid.

The sound calibration device shall meet the requirements of IEC 60942, class 1.

6.4 Vehicle speed measuring instrumentation

The average speed of the vehicle over the measured segment shall be measured, with a maximum permissible error of ±1 % of the indicated value.

For speed measurement, if a tyre is used it shall not be mounted on a drive axle.

6.5 Position monitoring instrumentation

GPS or other means of identifying the start positions of measurements are very useful in order to avoid problems in identifying a test section and to be able to return to the same place at a later occasion or for other types of measurements. It is recommended that the GPS system is of a type specified with a maximum permissible error of ±5 m.

6.6 Temperature measuring instrumentation

The air and (optional) road temperature measuring instrument(s) shall have a maximum permissible error of ±1 °C, as specified by the manufacturer. Meters utilizing the infrared technique shall not be used for air temperature measurements.

6.7 Tyre load measuring equipment

The weighing equipment used to determine the load of the test tyres shall have a maximum permissible error of ±5 %, as specified by the manufacturer.

6.8 Inflation pressure measuring equipment

The equipment used to determine the inflation pressure of the test tyres shall have a maximum permissible error of ±4 %.

6.9 Verification of measuring system and measuring instrumentation

The compliance of the sound calibrator with the requirements of the appropriate class of IEC 60942 shall be verified annually. The compliance of the sound level meter or equivalent measuring system with the requirements of IEC 61672-1 shall be verified at least every two years. This shall be performed by a laboratory authorized to perform calibrations traceable to the appropriate standards. It is recommended that all other instrumentation should be calibrated at least every two years.

© ISO 2017 – All rights reserved

Documents
Document Sharing Hub
Full document details: BS EN ISO 11819-2:2017

7 Test sites

In performing a CPX measurement, there are a number of practical constraints which define the minimum requirements for the road section to be suitable for assessment. These can be summarized as follows.

— The approach to the road section shall be of sufficient length to allow the reference speed to be reached before reaching the road section. There shall be a run-in of at least 10 m of the same surface type before the road section begins.

— The road section (excluding the run-in) shall be at least 20 m long, and preferably longer than 100 m.

— The road section shall not include bends with a radius of curvature less than 250 m at 50 km/h and 500 m at 80 km/h.

— The surface of the road section up to a distance of 0,5 m perpendicularly from the sidewall of the test tyre facing the microphone shall be the same surface type as in the wheel track or have similar acoustical impedance characteristics.

— The limitations on background noise at the test site according to A.5 shall be observed.

— Where measurements are taken using a test vehicle without an enclosure (see 9.1), those parts of the road section where there are reflecting surfaces within a distance of 2 m from the microphone shall be excluded from the assessment. This includes guard rails, Jersey barriers or any other barriers or embankments, rocks, parked vehicles, bridges and buildings. In cases where the test vehicle includes an enclosure complying with the requirements of Annex A, no restrictions apply to objects at the roadside.

With regard to the last requirement, 2 m is selected as a precaution against the possible effect of multiple reflections between two hard surfaces: the vehicle side panel (if any) and the roadside object. If the user can show that such reflections for the vehicle configuration opposite a solid parallel wall never have any influence on the measured levels at a distance less than 2 m, the distance can be reduced to that lower distance – however, never less than 1 m. If applicable for the tested road, such reflection tests shall be referred to in the test report.

8 Meteorological conditions

8.1 Wind

It is recommended that ambient wind speed does not exceed 5 m/s at the microphone height during the measurement for test vehicles without an enclosure around the microphone and test tyre. If the test tyre(s) is/are enclosed, wind speeds up to 10 m/s are acceptable.

If the test vehicle manufacturer or user can prove that the vehicle can travel in higher wind speeds, in any direction, without a significant influence on the measurement result, the recommendation above can be ignored. The same conditions as in A.3.2 shall then be met.

8.2 Temperature and other weather-related issues

Measurements shall be carried out only when road surfaces are dry and ambient air temperature is within the range representative for that climatic zone:

— moderate and continental: 5 °C to 30 °C;

— tropical and subtropical: 10 °C to 35 °C.

© ISO 2017 – All rights reserved
Documents
Document Sharing Hub
Full document details: BS EN ISO 11819-2:2017

The surfaces can be assumed to be sufficiently dry if the minimum time periods for drying-up after rainfall given in Table F.1 are observed.

NOTE 1 The allowed temperature range is related to local road materials. In the warmer zones, high temperatures are common and bitumen viscosity is adjusted to it, while the same temperature in a cooler climate can cause bleeding of the bitumen. This is known to cause extra stick-snap sound from the rolling tyre.

NOTE 2 Annex F also gives guidelines for estimating the level of moisture within the voids of porous surfaces by a simple test method.

9 Test vehicle

9.1 General design

The test vehicle may be one of the following types.

— A self-powered vehicle on which one or two reference (test) tyre(s) is/are fitted to the axle closest to the microphones. It could also be a vehicle with an extra tyre fitted for testing purposes.

— A trailer towed by a separate vehicle. There shall be one or more test tyres, which are mounted on the trailer. Additionally, the trailer may have tyres for support.

The test tyre(s) may or may not be surrounded by an enclosure covering the tyres except for a certain clearance to the road, the purpose of which is to protect the microphones from external noise and wind influences.

The requirements on the test vehicle have the objective to come as close as possible to the reference case in which a tyre is rolling on a road surface with microphones in an acoustical hemi-free-field, i.e. where there are no sound reflections except from the road surface and no background noise.

The requirements and design recommendations in the following are intended to approach this ideal situation within practical constraints.

For the purposes of this document there are three sources of unwanted contribution to the free field sound transmission from tyre to microphone:

a) background noise related to the system, consisting of sources such as wind noise and sound from the towing vehicle;

b) background noise from unrelated sources such as passing vehicles and reflections against roadside objects;

c) contributions from unwanted reflections against parts of the system, such as insufficiently absorbing enclosures and parts of suspensions systems.

The vehicle shall comply with the requirements described in Annex A. See also 10.7 regarding possibilities of discarding segments where this requirement is exceeded.

9.2 Microphone positions and mounting

At least two microphones shall be used. The two mandatory microphones shall be in operation simultaneously. The positions of the mandatory microphones under static condition relative to the test tyre shall be as follows (see Figure 1 and Table 2):

— distance horizontally from the plane of an undeflected part of the tyre sidewall shall be 0,20 m ±0,01 m;

— the height above pavement level shall be 0,10 m ± 0,01 m.

All measurements refer to the centre of the microphone diaphragm. It is recommended that the “front“ microphone (1) be turned at an angle of 45° to the rolling direction, and the “rear“ microphone (2) be turned at an angle of 135° to the rolling direction, as shown in Figure 1. However, in the case of non-

© ISO 2017 – All rights reserved

AVA Documents Document Sharing Hub
Full document details: BS EN ISO 11819-2:2017

enclosed systems, it may be preferable to mount the microphones parallel to the driving direction in order to reduce potential influence of air turbulence.

Optional positions at angles of 0°, 90°, and 180° to the rolling direction as indicated in Figure 1 may be used in cases where the user wants a more complete mapping of the tyre/road noise directional properties.

Figure 1 shows the microphones on the left side of the test wheel assembly. Depending on the construction of the test vehicle, the microphones may also be mounted on the right hand side, but microphones 1 and 4 shall then remain at the front position.

When mounting the microphones it is important to make sure that the mounting is robust in order that vibrations in the microphones do not affect the measurements. It has been reported in literature that vibrations may affect the measured noise levels [19].

NOTE If using reference tyres of substantially different dimensions than that of P1 and H1 (as specified in ISO/TS 11819-3), one must be aware that the sound levels in microphones 4 to 6 will be highly influenced by the distance (d_3 and d_4) between the microphones and the trailing and leading edges of the tyre/road contact patch. In case of tyre comparisons, it could then be more relevant to keep the distance between the microphones and the contact edges constant.

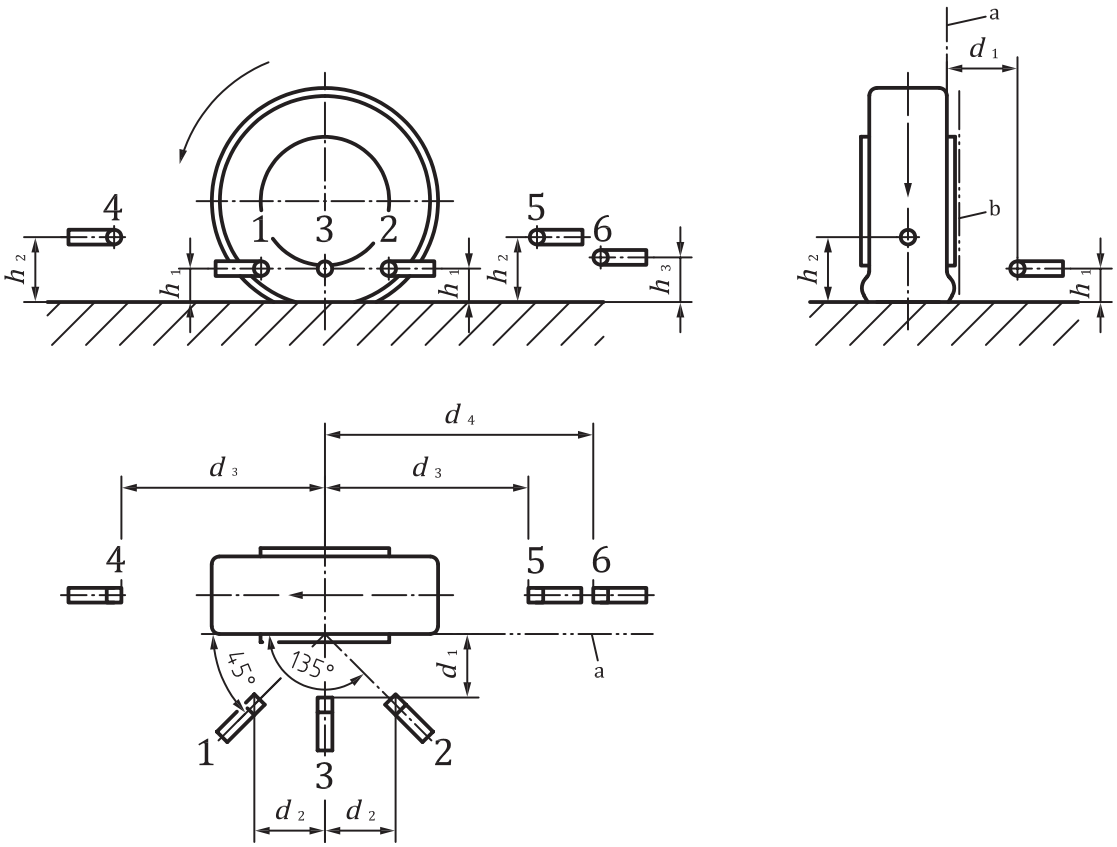

Key

a	Undeflected tyre sidewall.	2	rear mandatory microphone
b	Deflected tyre sidewall.	3	middle optional microphone
d_1, d_2, d_3, d_4	see Table 2	4	front optional microphone
h_1, h_2, h_3	see Table 2	5	rear optional microphone
1	front mandatory microphone	6	rearmost optional microphone

Figure 1 — Microphone positions for the measurements

© ISO 2017 – All rights reserved
Documents
Document Sharing Hub
Full document details: BS EN ISO 11819-2:2017

Table 2 — The microphone positions in Figure 1

Microphone(s)	h_1	h_2	h_3	d_1	d_2	d_3	d_4
1, 2	0,10 m			0,20 m	0,20 m		
3	0,10 m			0,20 m	0,00 m		
4, 5		0,20 m				0,65 m	
6			0,15 m				0,80 m

9.3 Performance requirements and conformity of the test vehicle

The test vehicle and measurement system performance shall comply with the requirements in Annex A.

Additional checks on test vehicle performance related to background noise (A.3) shall be made prior to testing under the following circumstances.

— If the tyres on either the test vehicle (if self-powered) or the towing vehicle are in significantly different condition to when the test vehicle was last certified. This is of particular importance on test vehicles which do not include any form of enclosure around the test tyre.

— If the towing vehicle is of a significantly different type to that used when the test vehicle was last certified.

9.4 Reference tyres

Reference tyres are test tyres specified for the purpose of representing certain features in tyre/road sound emission, selected for use in this method with specified and reproducible standard properties.

The standard reference tyres shall be P1 and H1 as specified in ISO/TS 11819-3. Depending on the purpose of the measurement, one or both are used.

Tyres other than P1 and H1 may be used for research or special survey purposes. A description of the alternative tyres shall then be included in the test report.

NOTE The advantages of using reference tyres in comparison to using some mix of market tyres is that it ensures consistency and availability of the test tyres over time and international comparability of measurement results.

It is recognized that when this standard is implemented in individual countries, there could be a need to use reference tyres other than P1 and H1 in order to represent local conditions or to address fitment possibilities on available CPX systems. This is acceptable, but the alternative reference tyres as well as the justification for their use should be set out in the relevant national implementation guideline or system. Conversion of L_{CPX} values for the alternative reference tyres to those values equivalent to P1 and H1 is useful only for indicative comparisons.

9.5 Tyre rubber hardness

The rubber hardness of the test tyres shall be measured at least every three months. Refer to ISO/TS 11819-3 for the testing procedure.

9.6 Tyre mounting

The test tyres shall be mounted on the test vehicle such that

— any indicated rotational direction is respected, or

— any “outside” marking is respected, or

— the sidewall with the full DOT mark (including the production week/year number) faces the microphones.

© ISO 2017 – All rights reserved

Documents
Document Sharing Hub
Full document details: BS EN ISO 11819-2:2017

Once a tyre mounting has been selected, tyres shall be mounted in this way throughout their use as reference tyres for this purpose.

9.7 Tyre run-in

Tyre run-in is important and is described in ISO/TS 11819-3.

10 Measurement procedure

10.1 Preparations for measurements

The microphone position shall be checked regularly, e.g. each time a test tyre is changed or when an acoustical calibration is made. Where a self-powered test vehicle is used one shall check the microphone positions at typical operating conditions, i.e. with driver and possible operators onboard and with typical amount of fuel in the tank, etc.

Before any standard measurement takes place the tyres shall be brought to normal operating temperature. Methods for achieving this include driving the test vehicle for at least 15 min for warm-up representative of reference speeds up to 80 km/h and at least 10 min at the higher reference speeds.

The test tyres shall be examined regularly for damage to the tread and for the presence of foreign objects in the tread. Chippings or other dirt in the tread shall be removed before testing takes place and where appropriate during testing.

10.2 Measurement of sound

The time-averaged A-weighted one-third-octave-band SPL from 315 Hz to 5 000 Hz shall be determined at each microphone position by averaging over each road segment of 20 m. This forms the basis for all further evaluations. It is mandatory to measure one-third-octave-band frequency spectra. No separate measurement of overall SPL is required.

The time-averaged SPL for an individual one-third-octave band with the centre frequency f measured at microphone position m at the wheel track w for the road segment with the index i in the run r using the tyre t and measured at reference speed v_{ref} is designated as:

$$L_{\mathrm{CPX:t},w,r,i,f,m,v_{\mathrm{ref}}}$$

10.3 Procedure for study of typical road section

The following requirements apply if the purpose of the measurement is to obtain a CPX level which is representative of a road section (i.e. several consecutive road segments).

After eliminating the road segments for which the test requirements are not met (e.g. due to background noise or too much deviating speed, see 10.3, last paragraph), a road section shall be considered as properly measured, i.e. the run accepted, if at least half of the road segments, with a reasonable spread over the entire section, have been measured under acceptable conditions. However, no less than five such segments shall be properly measured.

For each test condition, at least two runs in one or both wheel tracks covering the road section in accordance with the previous paragraph shall be made. If the two A-weighted overall levels representing the road section (one per run) differ by more than 0,5 dB for one tyre, at least two new runs shall be made for that tyre. The final result per tyre is then the arithmetic average of all the runs or tracks.

NOTE 1 Where simultaneous measurements are made with the same type of tyre in both wheel tracks, if the difference between the two tracks exceeds 0,5 dB, it is possible that this does not indicate an erroneous measurement, but rather a systematic track-to-track difference.

© ISO 2017 – All rights reserved
Documents
Document Sharing Hub
Full document details: BS EN ISO 11819-2:2017

Speeds can sometimes become too high and sometimes too low due to restrictions imposed by other vehicles in the traffic and thus do not meet the requirements of 10.8.2. Discard data collected at such speeds.

NOTE 2 This subclause does not apply to the survey method described in Annex G.

10.4 Minimum number of runs for very short road sections

A road section consists of a number of road segments (normally at least five). Where the available test section is only 20 m to 100 m (plus run-in, see Clause 7), measurements according to this document can still be made, but the number of runs shall be sufficient to give a total measured distance of at least 200 m. The number of such repeated runs and the length of each run shall be reported explicitly.

10.5 Lateral position on the road

Unless the client has other requirements, measurements shall be made in one or both wheel tracks of the test lane. Selection of the wheel track (if only one is chosen) may be made based on safe driving of the vehicle. The selected wheel track (left or right) shall be reported.

For other purposes, e.g. study of lateral inhomogeneity of the surface, measurements may be made in other lateral positions. In this case, the results shall clearly identify the lateral position of the test tyre.

See further the discussion in F.3.

10.6 Longitudinal position on the road

The longitudinal position on the road of the tested section(s) is normally determined according to the requirements of the client. It is good practice to follow the suggestions regarding position monitoring in 6.5.

10.7 Consideration of disturbing noise

Given that the test vehicle has been designed according to the recommendations in Annex E and has been certified according to Annex A, there are still several sources of disturbing noise which might affect noise levels during measurements. These include:

— wind-induced noise, particularly on non-enclosed systems;

— background noise from unrelated sources such as passing vehicles and reflections against roadside objects.

More sources of disturbance and advice on how to reduce the effects of these are presented in F.4.

Road segments where noise levels are considered as disturbed or potentially disturbed shall be flagged for later processing (see Clause 11) or discarded immediately, as appropriate.

10.8 Test vehicle speed

10.8.1 Reference speeds

Preferred reference speeds are 50 km/h, 80 km/h and 110 km/h. The actual reference speed(s) shall always be noted.

10.8.2 Test speed and acceptable deviations

During each run the actual speed of the vehicle shall be measured. For each road segment, the test speed is the average vehicle speed over that road segment.

© ISO 2017 – All rights reserved

Documents
Document Sharing Hub
Full document details: BS EN ISO 11819-2:2017

The actual test speed on each road segment shall not deviate from the reference speed by more than ±15 %. In addition, the average speed over all runs and over a tested road section for a given tyre shall be within ±5 % of the reference speed. Make a correction to the measured sound pressure level to adjust it to correspond to the reference speed (see Clause 11).

In order to avoid disturbing noise, especially for self-powered test vehicles, it is preferable to use the highest gear at which the vehicle and its speed control function well.

10.9 Tyre loads

The static load of the test tyre(s) shall be 3 200 N ± 200 N per tyre.

10.10 Tyre inflation

The test tyre(s) shall be inflated to 200 kPa ± 10 kPa, in cold condition. Cold condition is when the temperature of the tyre is close to the ambient temperature, i.e. the tyre has not yet been significantly warmed-up by rolling. If the inflation has to be changed substantially to obtain this value, then a second check of the inflation shall be made after approximately 2 minutes (with tyre at rest).

The preferred inflation gas is nitrogen. The reasons are that nitrogen inflation reduces the leakage of gas and thus reduces the need for inflation adjustments. It also causes slower change in the tyre rubber compound properties than air and the inflation pressure change during the warm-up process is normally lower than if air containing some humidity is used. See Reference [4] for further information.

The second-best choice of inflation gas is dry air, since humidity in air influences the inflation pressure stability.

If neither nitrogen nor dry air is available, normal air may be used.

The load (10.9) and inflation values are applicable to the use of reference tyres P1 and H1 only. If other tyres are used, inflation may have to be differently adapted to the load; for example, using the guidelines in Reference [18], Annex 3, paragraphs 2.5.2 and 2.5.3.

10.11 Temperature measurement

10.11.1 General

Measurements of air temperature are mandatory, whereas measurements of road surface temperature are recommended as a supplement.

The temperature measurements shall be conducted close in time to the sound measurement, either continuously or intermittently, and the result reported rounded to the nearest degree Celsius.

If possible, it is recommended that temperature measurements be made continuously. It is then recommended that temperature readings be taken in synchronization with the noise level measurements, i.e. per each road segment and indexed in the same way.

If temperature measurements are made intermittently, each temperature measurement shall have a duration sufficient to get a stable reading of the instrument. Temperatures shall be measured at least once for each road section at a location representative for that section.

It is preferred that the sensor(s) be placed on the test vehicle. If this is not practical or possible, the temperature(s) shall be measured at the wayside as close to the road as is possible and safe.

It has been found in research in areas with a lot of high-rise buildings that road surface temperature may be a better variable to base temperature corrections on (Reference [5]). Therefore, in such environments it is highly recommended that both air and road surface temperature be measured.

NOTE Surface temperature, especially, can vary substantially along a test section depending on different shading of trees, mountains, buildings, etc., as well as on cross-winds and surface light-absorbing properties.

© ISO 2017 – All rights reserved
AVA Documents Document Sharing Hub
Full document details: BS EN ISO 11819-2:2017

10.11.2 Air temperature

Locate the temperature sensor so that it is unobstructed and safe, and in such a way that it is exposed to the airflow and protected from direct solar radiation. The latter may be achieved by a shading screen. The sensor shall be positioned 0,5 m to 1,5 m above road surface level.

10.11.3 Road surface temperature (optional)

Position the temperature sensor where the temperature is representative of the temperature in the wheel tracks.

10.12 Overview and summary

An overview and summary of all major measurement parameters is presented in Annex I.

11 Analysis procedure

11.1 Definition of steps in the calculation process

The primary result is $L_{\mathrm{CPX:t},v_{ref}}$. $L_{\mathrm{CPX:P}}$, $L_{\mathrm{CPX:H}}$ and $L_{\mathrm{CPX:I}}$ are only derived if using reference tyres.[1] The resulting $L_{\mathrm{CPX:P}}$ and $L_{\mathrm{CPX:H}}$ levels shall be calculated from the individual measured data $L_{\mathrm{CPX:t},w,r,i,f,m,v_{\mathrm{ref}}}$. Annex C presents a detailed breakdown of the calculation procedures and in Annex N a flowchart illustrates the measurements and analysis procedures that have to be conducted to arrive at a final result.

A somewhat abridged explanation of the calculation procedures is as follows:

a) In each one-third-octave band, calculate the energy-based average of front and rear microphone SPLs (microphones 1 and 2 in Figure 1).

b) Apply the device dependent correction $C_{\mathrm{d},f}$ (see A.2).

c) Calculate the overall SPL for a segment from the one-third-octave-band SPLs from 315 Hz to 5 000 Hz (omit this step if one-third-octave-band levels are desired).

d) Apply a speed correction for deviations from the reference speed of B times the logarithm of the quotient of the actual and the reference speed. The value of the speed coefficient B shall be:

   — B = 25 for a porous pavement in relatively new condition, or older but with no severe clogging;

   — B = 30 for a clogged porous, semi-porous or dense asphalt pavement;

   — B = 35 for a (non-porous) cement concrete pavement;

   — B = 30 for all other cases, including cases where the pavement type is unknown.

   To help distinguish between cases, one may consider a pavement as “porous” (and not clogged) if air voids are ≥18 %. If air voids are unknown or difficult to estimate, select B = 30.

   The experience is that B varies over a range of 20 to 40 depending on test tyre and pavement type. It is possible for a user to determine by his or her own measurements a specific B for a specific combination of tyre and pavement. However, the uncertainties associated with such measurements are such that they rarely give values for B closer to the true value than those given using the default values above, which have been determined based on a large number of measurements. The resulting error in the correction is negligible in relation to other measurement errors. Therefore, this document requires the use of the values listed in the foregoing.

1) As specified in ISO/TS 11819-3. See the Introduction.

© ISO 2017 – All rights reserved

Documents
Document Sharing Hub
Full document details: BS EN ISO 11819-2:2017