BS EN ISO 12211:2012

BSI Standards Publication

Petroleum, petrochemical and natural gas industries — Spiral plate heat exchangers (ISO 12211:2012)

bsi.

...making excellence a habit.™

Document Sharing Hub

National foreword

This British Standard is the UK implementation of EN ISO 12211:2012.

The UK participation in its preparation was entrusted to Technical Committee PSE/17/-/6, Processing equipment and systems for petroleum and natural gas industries.

A list of organizations represented on this committee can be obtained on request to its secretary.

This publication does not purport to include all the necessary provisions of a contract. Users are responsible for its correct application.

© The British Standards Institution 2012. Published by BSI Standards Limited 2012

ISBN 978 0 580 66140 2

ICS 27.060.30; 75.180.20

Compliance with a British Standard cannot confer immunity from legal obligations.

This British Standard was published under the authority of the Standards Policy and Strategy Committee on 31 August 2012.

Amendments issued since publication

Date	Text affected

Documents
Document Sharing Hub

Full document details: BS EN ISO 12211:2012

EUROPEAN STANDARD

NORME EUROPÉENNE

EUROPÄISCHE NORM

EN ISO 12211

August 2012

ICS 27.060.30; 75.180.20

English Version

Petroleum, petrochemical and natural gas industries - Spiral plate heat exchangers (ISO 12211:2012)

Industries du pétrole, de la pétrochimie et du gaz naturel - Échangeurs thermiques à plaques en spirale (ISO 12211:2012)

Erdöl- und Erdgasindustrie - Spiralförmige Wärmeaustauscher (ISO 12211:2012)

This European Standard was approved by CEN on 27 April 2012.

CEN members are bound to comply with the CEN/CENELEC Internal Regulations which stipulate the conditions for giving this European Standard the status of a national standard without any alteration. Up-to-date lists and bibliographical references concerning such national standards may be obtained on application to the CEN-CENELEC Management Centre or to any CEN member.

This European Standard exists in three official versions (English, French, German). A version in any other language made by translation under the responsibility of a CEN member into its own language and notified to the CEN-CENELEC Management Centre has the same status as the official versions.

CEN members are the national standards bodies of Austria, Belgium, Bulgaria, Croatia, Cyprus, Czech Republic, Denmark, Estonia, Finland, Former Yugoslav Republic of Macedonia, France, Germany, Greece, Hungary, Iceland, Ireland, Italy, Latvia, Lithuania, Luxembourg, Malta, Netherlands, Norway, Poland, Portugal, Romania, Slovakia, Slovenia, Spain, Sweden, Switzerland, Turkey and United Kingdom.

EUROPEAN COMMITTEE FOR STANDARDIZATION
COMITÉ EUROPÉEN DE NORMALISATION
EUROPÄISCHES KOMITEE FÜR NORMUNG

Management Centre: Avenue Marnix 17, B-1000 Brussels

© 2012 CEN All rights of exploitation in any form and by any means reserved worldwide for CEN national Members.

Ref. No. EN ISO 12211:2012: E

Documents
Document Sharing Hub

Full document details: BS EN ISO 12211:2012

Foreword

This document (EN ISO 12211:2012) has been prepared by Technical Committee ISO/TC 67 "Materials, equipment and offshore structures for petroleum, petrochemical and natural gas industries" in collaboration with Technical Committee CEN/TC 12 “Materials, equipment and offshore structures for petroleum, petrochemical and natural gas industries” the secretariat of which is held by AFNOR.

This European Standard shall be given the status of a national standard, either by publication of an identical text or by endorsement, at the latest by February 2013, and conflicting national standards shall be withdrawn at the latest by February 2013.

Attention is drawn to the possibility that some of the elements of this document may be the subject of patent rights. CEN [and/or CENELEC] shall not be held responsible for identifying any or all such patent rights.

According to the CEN/CENELEC Internal Regulations, the national standards organizations of the following countries are bound to implement this European Standard: Austria, Belgium, Bulgaria, Croatia, Cyprus, Czech Republic, Denmark, Estonia, Finland, Former Yugoslav Republic of Macedonia, France, Germany, Greece, Hungary, Iceland, Ireland, Italy, Latvia, Lithuania, Luxembourg, Malta, Netherlands, Norway, Poland, Portugal, Romania, Slovakia, Slovenia, Spain, Sweden, Switzerland, Turkey and the United Kingdom.

Endorsement notice

The text of ISO 12211:2012 has been approved by CEN as a EN ISO 12211:2012 without any modification.

Documents
Document Sharing Hub

Full document details: BS EN ISO 12211:2012

Contents

Page

Foreword iv
Introduction v
1 Scope 1
2 Normative reference 1
3 Terms and definitions 1
4 General 4
5 Proposal information required 5
6 Drawings and other data requirements 5
6.1 Outline drawings and other supporting data 5
6.2 Information required after outline drawings are reviewed 6
6.3 Reports and records 7
7 Design 8
7.1 General 8
7.2 Design temperatures 8
7.3 Design pressure 8
7.4 Fouling margin 8
7.5 Corrosion allowance 8
7.6 Components 9
7.7 Supports 14
7.8 Cover gaskets 14
7.9 Handling devices 15
8 Materials 15
8.1 General 15
8.2 Requirements for carbon steel in sour or wet hydrogen sulfide service 16
8.3 Cover gaskets 16
9 Fabrication 16
9.1 Welding 16
9.2 Heat treatment 17
9.3 Gasket contact surfaces other than nozzle flange facings 17
10 Inspection and testing 17
10.1 Quality assurance 17
10.2 Quality control 18
10.3 Pressure testing 19
10.4 Nameplates 19
11 Preparation for shipment 20
11.1 Protection 20
11.2 Identification 20
Annex A (informative) **Recommended practice** 21
Annex B (informative) **Spiral plate heat exchanger checklist** 27
Annex C (informative) **Spiral plate heat exchanger data sheets** 28
Bibliography 37

© ISO 2012 – All rights reserved

Documents
Document Sharing Hub
Full document details: BS EN ISO 12211:2012

Foreword

ISO (the International Organization for Standardization) is a worldwide federation of national standards bodies (ISO member bodies). The work of preparing International Standards is normally carried out through ISO technical committees. Each member body interested in a subject for which a technical committee has been established has the right to be represented on that committee. International organizations, governmental and non-governmental, in liaison with ISO, also take part in the work. ISO collaborates closely with the International Electrotechnical Commission (IEC) on all matters of electrotechnical standardization.

International Standards are drafted in accordance with the rules given in the ISO/IEC Directives, Part 2.

The main task of technical committees is to prepare International Standards. Draft International Standards adopted by the technical committees are circulated to the member bodies for voting. Publication as an International Standard requires approval by at least 75 % of the member bodies casting a vote.

Attention is drawn to the possibility that some of the elements of this document may be the subject of patent rights. ISO shall not be held responsible for identifying any or all such patent rights.

ISO 12211 was prepared by Technical Committee ISO/TC 67, *Materials, equipment and offshore structures for petroleum, petrochemical and natural gas industries*, Subcommittee SC 6, *Processing equipment and systems*.

© ISO 2012 – All rights reserved
Documents
Document Sharing Hub
Full document details: BS EN ISO 12211:2012

Introduction

It is necessary that users of this International Standard be aware that further or differing requirements can be needed for individual applications. This International Standard is not intended to inhibit a vendor from offering, or the purchaser from accepting, alternative equipment or engineering solutions for the individual application. This can be particularly applicable where there is an innovative or developing technology. Where an alternative is offered, it is the responsibility of the vendor to identify any variations from this International Standard and provide details.

This International Standard requires the purchaser to specify certain details and features.

A bullet (●) at the beginning of a clause or subclause indicates a requirement for the purchaser to make a decision or provide information (for information, a checklist is provided in Annex B).

In this International Standard, where practical, US Customary (USC) or other units are included in parentheses for information.

© ISO 2012 – All rights reserved

Documents
Document Sharing Hub
Full document details: BS EN ISO 12211:2012

Documents
Document Sharing Hub

INTERNATIONAL STANDARD ISO 12211:2012(E)

Petroleum, petrochemical and natural gas industries — Spiral plate heat exchangers

1 Scope

This International Standard specifies requirements and gives recommendations for the mechanical design, materials selection, fabrication, inspection, testing and preparation for shipment of spiral plate heat exchangers for the petroleum, petrochemical and natural gas industries.

It is applicable to stand-alone spiral plate heat exchangers and those integral with a pressure vessel.

2 Normative reference

The following referenced documents are indispensable for the application of this document. For dated references, only the edition cited applies. For undated references, the latest edition of the referenced document (including any amendments) applies.

ISO 15156 (all parts), *Petroleum and natural gas industries — Materials for use in H_2S-containing environments in oil and gas production*

NACE MR0103[1)] *Materials Resistant to Sulfide Stress Cracking in Corrosive Petroleum Refining Environments*

NACE SP0472, *Methods and Controls to Prevent In-Service Environmental Cracking of Carbon Steel Weldments in Corrosive Petroleum Refining Environments*

3 Terms and definitions

For the purposes of this document, the following terms and definitions apply.

3.1
alternate channels welded
ACW
channel closures seal-welded at alternate edges such that each chamber is accessible by removing the corresponding hot or cold side end cover

3.2
centre core
distribution chamber at the centre of the spiral exchanger

3.3
channel
spiral passage formed by strips of metal rolled around a centre core within an outer shell

1) NACE International, P.O. Box 218340, Houston, TX 77218-8340, USA.

© ISO 2012 – All rights reserved

Documents
Document Sharing Hub
Full document details: BS EN ISO 12211:2012

3.4
channel closure
configuration to seal the edge of the internal spiral plate

3.5
spiral plate length
spiral passage length
length of strip(s) in the spiral direction corresponding to the length of each spiral passage

3.6
channel spacing
distance or gap between adjacent spiral plates

3.7
channel width
spiral plate width
width of the strip or plate from which the spiral body is rolled

3.8
clamp-bolting
peripheral hook style bolting used to seal the end cover to the flange ring

NOTE 1 Flange-style bolting and cover design are also possible with stud-bolts and double nuts.

NOTE 2 See Figure 1.

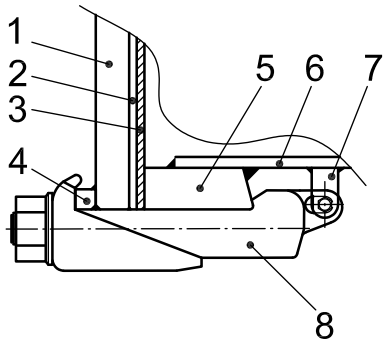

Key

1	end cover	5	flange ring
2	liner (for stainless steel or higher)	6	spiral body
3	full-face sheet gasket	7	U-bracket clip
4	cover ring	8	clamp bolt

Figure 1 — Typical cover clamp-bolting

3.9
cover ring
metal ring welded or integral to the outside face of the end cover that serves as a retaining (grab) ring for the clamp portion of the end cover

3.10
cyclic service
process operation with periodic variation in temperature, pressure and/or flowrate

© ISO 2012 – All rights reserved
Documents
Document Sharing Hub
Full document details: BS EN ISO 12211:2012

3.11
distribution manifold
pocket
semi-cylindrical manifold welded to outer shell that allows a fluid to enter or leave the spiral body through corresponding nozzles in the shell

3.12
end cover
cover that seals the fluids in their respective chambers and prevent external leakage

3.13
exchanger orientation
orientation of the cylindrical axis (centre core) of the spiral plate heat exchanger

3.14
heat transfer area
surface area of one side of the spiral plate that is in contact with both hot and cold fluids

NOTE 1 Where multiple plates are used for the channel, then the total area of spiral plates is used to form the spiral body. This equates to the channel width multiplied by the strip length multiplied by the number of strips.

NOTE 2 Areas of outer shell plate and spacer studs are not included.

3.15
hydrogen service
service that contains hydrogen at a partial pressure exceeding 700 kPa (100 psi) absolute

3.16
item number
purchaser's identification number for a spiral plate heat exchanger

3.17
minimum design metal temperature
lowest metal temperature at which pressure-containing elements can be subjected to design pressure

EXAMPLE Minimum ambient temperature or minimum process fluid temperature.

3.18
outer shell
outermost plate welded to the internal spiral plates as the pressure boundary for the spiral body

3.19
pressure design code
recognized pressure vessel standard specified or agreed by the purchaser

EXAMPLES ASME BPVC Section VIII, EN 13445 (all parts).

3.20
flange ring
sealing ring
solid metal ring welded to each end of the spiral body to provide the sealing surface for the gasket, designed to compress the cover and gasket securely against the spiral body using bolts

3.21
spacer stud
pin welded to one spiral plate used to maintain channel spacing

3.22
spiral plate
sheet(s) of metal rolled around a centre core to form a spiral passage

© ISO 2012 – All rights reserved

Documents
Document Sharing Hub
Full document details: BS EN ISO 12211:2012

3.23
structural welding code
recognized structural welding code specified or agreed by the purchaser

4 General

4.1 The pressure design code shall be specified or agreed by the purchaser. Pressure components shall comply with the pressure design code and the supplemental requirements in this International Standard.

4.2 The vendor shall comply with the applicable local regulations specified by the purchaser.

4.3 Typical components of a spiral heat exchanger are shown in Figure 2.

4.4 Annex A includes some recommended mechanical and design details for information.

4.5 Annex B provides a checklist that can be used by the purchaser to ensure that bulletted items in this International Standard are addressed.

4.6 The purchaser shall specify if the service is designated as sour in accordance with ISO 15156 (all parts) for oil and gas production facilities and natural gas sweetening plants, or designated as wet hydrogen sulfide service in accordance with NACE MR0103 for other applications (e.g. petroleum refineries, LNG plants and chemical plants), in which case all materials in contact with the process fluid shall meet the requirements of the applicable standard to mitigate potential for sulfide stress cracking (SSC). Identification of the complete set of materials, qualification, fabrication, and testing specifications to prevent in-service environmental cracking is the responsibility of the user (purchaser).

NOTE For the purpose of this provision, NACE MR0175 is equivalent to ISO 15156 (all parts).

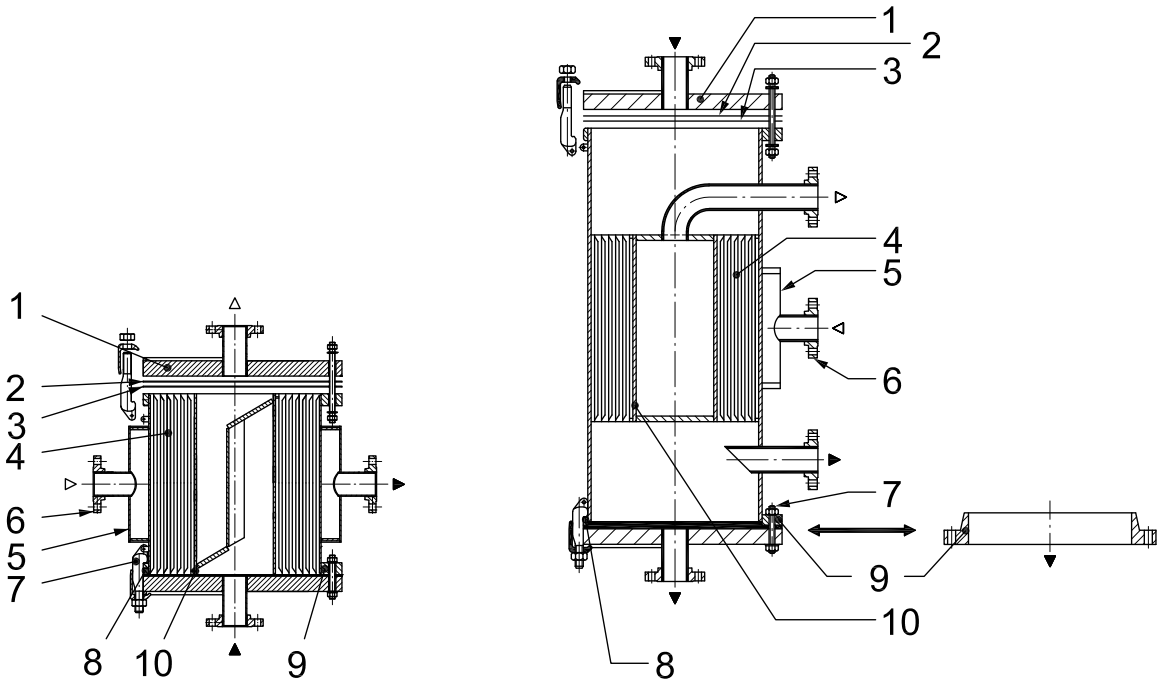

a) Spiral flow both sides **b) Spiral flow, cross flow**

Key

1	end cover	4	spiral plate	7	cover bolting	10	centre core
2	cover liner	5	distribution manifold	8	flange ring		
3	end cover gasket	6	nozzle flange	9	shell flange		

Figure 2 — Typical components of spiral plate heat exchangers

© ISO 2012 – All rights reserved
Documents
Document Sharing Hub
Full document details: BS EN ISO 12211:2012

5 Proposal information required

5.1 The vendor's proposal shall include, for each heat exchanger unit, completed data sheets such as those given in Annex C.

5.2 For components not fully defined by Clause 3, the vendor shall describe the details of construction and assembly.

5.3 The proposal shall include a detailed description of all exceptions to the requirements of the purchaser's inquiry.

5.4 A proposal drawing shall be furnished that shows the major dimensions in plan and elevation, including the nozzle sizes and their orientations, along with those for venting and draining, and approximate mass full of water.

5.5 The vendor's proposal shall include details of the channel closure construction.

5.6 The vendor’s proposal shall include the type of supports.

5.7 The vendor shall supply a recommended spare parts list for each spiral plate heat exchanger.

6 Drawings and other data requirements

6.1 Outline drawings and other supporting data

6.1.1 The vendor shall submit, for review by the purchaser, outline drawings for each heat exchanger unit. The drawings shall include the following information:

a) service, item number, project name and location, purchaser’s order number, vendor's shop order number and other special identification numbers;

b) design pressure, test pressure, design temperature, minimum design metal temperature for each side, and any restrictions on testing or operation of the heat exchanger;

c) maximum allowable working pressure (MAWP) in the corroded condition and at the design temperature for the hot side and cold side;

d) materials specifications and grades for all components;

e) where the heat exchanger is integral with or mounted on a pressure vessel, all mating dimensions, weld preparation details, including connection to the centre core and flange dimensions, gasket and bolting details;

f) connection sizes, location, orientation, projection, direction of flow and, if flanged, the rating and facing;

g) coupling sizes, rating and orientation;

h) dimensions, orientation and location of supports, including bolt holes and slots;

i) overall dimensions of the heat exchanger;

j) detailed information of the heat exchanger, including outer shell thickness, channel width, centre core type, channel spacing and channel closure type (hot and cold sides), channel plate thickness (hot and cold sides), spacer stud diameter and layout, end cover dimensions, shell flange dimensions, distribution manifolds dimensions, cover bolting details, space required for removable components;

© ISO 2012 – All rights reserved

Documents
Document Sharing Hub
Full document details: BS EN ISO 12211:2012

k) mass of the heat exchanger, empty and full of water, and of removable components with a mass greater than 25 kg (60 lb), e.g. end covers;

l) maximum allowable forces and moments on each connection;

m) specified corrosion allowance for each side of the heat exchanger;

n) references to the applicable code, standards, and the purchaser's specification;

o) requirements for post-weld heat treatment;

p) hardness test requirements;

q) requirements for non-destructive examination (NDE);

r) requirements for material impact testing;

s) requirements for surface preparation and painting;

t) gasket materials;

u) insulation thickness;

v) location and orientation of nameplates, lifting lugs, grounding clips or other attachments;

w) location of the centre of gravity of the empty exchanger. For units with hinged covers, the centre of gravity shall be shown for one or both covers open.

6.1.2 The review of engineering documents by the purchaser shall not relieve the vendor of the responsibility of meeting the requirements of the purchase order.

6.2 Information required after outline drawings are reviewed

6.2.1 Gasket details, including type and material, shall be provided. Details of any gasket jointing shall be included (see 7.8.2). This information shall not be marked with any restrictions for use.

6.2.2 Upon receipt of the purchaser's review comments on the outline drawings, the vendor shall submit copies of all detailed (non-proprietary) drawings. These shall fully describe the heat exchanger and shall include at least the following information:

a) full views and cross-sectional views with all dimensions and materials sufficient for mechanical design calculations for each part;

b) details of each pressure-retaining weld, including weld material, weld nominal thickness, weld location and applicable non-destructive examination method;

c) details of each weld and weld nominal thickness for non-pressure attachments;

d) complete bills of materials, including the material specification;

e) details of cladding and weld overlay;

f) flange-face finish;

g) installation, operation and maintenance instructions (manual), including lifting and handling.

● **6.2.3** If specified by the purchaser, the vendor shall furnish copies of applicable welding procedure specifications, procedure qualifications and weld map for review or record.

© ISO 2012 – All rights reserved
Documents
Document Sharing Hub
Full document details: BS EN ISO 12211:2012

6.2.4 Where sour or wet hydrogen sulfide service is specified, a Certified Material Test Report (CMTR) for all carbon steel materials in contact with the process fluid shall be supplied for the purchaser's review.

- **6.2.5** If specified by the purchaser, the vendor shall furnish for the purchaser's review or record the following documentation:

  a) mechanical design calculations for all the heat exchanger pressure-retaining components. If calculations are made using computer software, all input and output data shall be detailed so as to facilitate an understanding of the calculation procedures. The equations in the applicable sections of the pressure design code shall be referenced;

  b) mechanical calculations shall be provided for deflection of the end covers;

  c) design calculations based on seismic, wind, transportation and/or piping loads, if these loads are provided by the purchaser;

  d) recommended tools and proposed procedures for assembly of flanged joints, if controlled bolt-tightening procedures (such as hydraulic torque wrenches or hydraulic tensioning devices) are used. Any required lubricants shall be stated;

  e) design calculations for loads imposed on nozzles of heat exchangers attached to a vertical vessel.

- **6.2.6** The vendor shall submit design calculations for supports and lifting devices, if specified by the purchaser.

6.2.7 After final review, the vendor shall revise all the required drawings and welding procedures and submit each with the following text marked on every sheet separately and dated: “CERTIFIED FOR CONSTRUCTION”.

6.3 Reports and records

- After the heat exchanger is completed, the vendor shall furnish the purchaser with the following documents in the format and quantities specified by the purchaser:

  a) “as-built” data sheet;

  b) all outline and detail drawings, marked “CERTIFIED AS-BUILT”;

  c) certified record of all impact tests performed;

  d) certified mill test reports for all pressure parts, including channel plates (each material test report shall be identified by a part number);

  e) complete certified bill of materials suitable for obtaining all replacement parts, including quantity, description, material specification and identification of each part;

  f) temperature charts of all post-weld heat treatments;

  g) completed manufacturer's data report in accordance with the pressure design code;

  h) nameplate rubbing or a facsimile;

  i) all mechanical design calculations, marked “CERTIFIED AS-BUILT”;

  j) non-destructive examination (NDE) map;

  k) all associated NDE reports, including radiographic, magnetic-particle, liquid-penetrant, ultrasonic, hardness, impact, positive material identification (PMI) and any other reports as applicable;

  l) hydrostatic test records in the form of a chart or certification.

© ISO 2012 – All rights reserved

Documents
Document Sharing Hub
Full document details: BS EN ISO 12211:2012