BS EN ISO 12212:2012

BSI Standards Publication

Petroleum, petrochemical and natural gas industries — Hairpin-type heat exchangers (ISO 12212:2012)

bsi.

...making excellence a habit.™

Document Sharing Hub

Full document details: BS EN ISO 12212:2012

National foreword

This British Standard is the UK implementation of EN ISO 12212:2012.

The UK participation in its preparation was entrusted to Technical Committee PSE/17/-/6, Processing equipment and systems for petroleum and natural gas industries.

A list of organizations represented on this committee can be obtained on request to its secretary.

This publication does not purport to include all the necessary provisions of a contract. Users are responsible for its correct application.

© The British Standards Institution 2012. Published by BSI Standards Limited 2012

ISBN 978 0 580 66141 9

ICS 27.060.30; 75.180.20

Compliance with a British Standard cannot confer immunity from legal obligations.

This British Standard was published under the authority of the Standards Policy and Strategy Committee on 31 August 2012.

Amendments issued since publication

Date	Text affected

Documents
Document Sharing Hub

Full document details: BS EN ISO 12212:2012

EUROPEAN STANDARD

NORME EUROPÉENNE

EUROPÄISCHE NORM

EN ISO 12212

August 2012

ICS 75.180.20; 27.060.30

English Version

Petroleum, petrochemical and natural gas industries - Hairpin-type heat exchangers (ISO 12212:2012)

Industries du pétrole et du gaz naturel - Échangeurs thermiques en épingle à cheveux (ISO 12212:2012)

Erdöl-, petrochemische und Erdgasindustrie - Haarnadel - Wärmetauscher (ISO 12212:2012)

This European Standard was approved by CEN on 27 April 2012.

CEN members are bound to comply with the CEN/CENELEC Internal Regulations which stipulate the conditions for giving this European Standard the status of a national standard without any alteration. Up-to-date lists and bibliographical references concerning such national standards may be obtained on application to the CEN-CENELEC Management Centre or to any CEN member.

This European Standard exists in three official versions (English, French, German). A version in any other language made by translation under the responsibility of a CEN member into its own language and notified to the CEN-CENELEC Management Centre has the same status as the official versions.

CEN members are the national standards bodies of Austria, Belgium, Bulgaria, Croatia, Cyprus, Czech Republic, Denmark, Estonia, Finland, Former Yugoslav Republic of Macedonia, France, Germany, Greece, Hungary, Iceland, Ireland, Italy, Latvia, Lithuania, Luxembourg, Malta, Netherlands, Norway, Poland, Portugal, Romania, Slovakia, Slovenia, Spain, Sweden, Switzerland, Turkey and United Kingdom.

EUROPEAN COMMITTEE FOR STANDARDIZATION
COMITÉ EUROPÉEN DE NORMALISATION
EUROPÄISCHES KOMITEE FÜR NORMUNG

Management Centre: Avenue Marnix 17, B-1000 Brussels

© 2012 CEN All rights of exploitation in any form and by any means reserved worldwide for CEN national Members.

Ref. No. EN ISO 12212:2012: E

Documents
Document Sharing Hub

Full document details: BS EN ISO 12212:2012

Foreword

This document (EN ISO 12212:2012) has been prepared by Technical Committee ISO/TC 67 "Materials, equipment and offshore structures for petroleum, petrochemical and natural gas industries" in collaboration with Technical Committee CEN/TC 12 “Materials, equipment and offshore structures for petroleum, petrochemical and natural gas industries” the secretariat of which is held by AFNOR.

This European Standard shall be given the status of a national standard, either by publication of an identical text or by endorsement, at the latest by February 2013, and conflicting national standards shall be withdrawn at the latest by February 2013.

Attention is drawn to the possibility that some of the elements of this document may be the subject of patent rights. CEN [and/or CENELEC] shall not be held responsible for identifying any or all such patent rights.

According to the CEN/CENELEC Internal Regulations, the national standards organizations of the following countries are bound to implement this European Standard: Austria, Belgium, Bulgaria, Croatia, Cyprus, Czech Republic, Denmark, Estonia, Finland, Former Yugoslav Republic of Macedonia, France, Germany, Greece, Hungary, Iceland, Ireland, Italy, Latvia, Lithuania, Luxembourg, Malta, Netherlands, Norway, Poland, Portugal, Romania, Slovakia, Slovenia, Spain, Sweden, Switzerland, Turkey and the United Kingdom.

Endorsement notice

The text of ISO 12212:2012 has been approved by CEN as a EN ISO 12212:2012 without any modification.

Documents
Document Sharing Hub

Full document details: BS EN ISO 12212:2012

Contents

Page

Foreword v
Introduction vi
1 Scope 1
2 Normative reference 1
3 Terms and definitions 1
4 General 3
5 Proposal information required 4
6 Drawings and other required data 4
6.1 Outline drawings and other supporting data 4
6.2 Information required after outline drawings are reviewed 5
6.3 Reports and records 6
7 Design 7
7.1 Design temperature 7
7.2 Design pressure 7
7.3 Cyclic design 7
7.4 Shell 8
7.5 Front closure 8
7.6 Rear closure 10
7.7 Tube bundle 11
7.8 Nozzles and other connections 14
7.9 Shell supports 18
7.10 Gaskets 19
7.11 Flanged external girth joints 19
7.12 Cladding for corrosion allowance 19
8 Materials 20
8.1 General 20
8.2 Requirements for carbon steel in sour or wet hydrogen sulfide service 20
8.3 Gaskets 20
8.4 Tubes 20
9 Fabrication 21
9.1 Shells 21
9.2 Tubes 21
9.3 Welding 21
9.4 Heat treatment 22
9.5 Dimensional tolerances 22
9.6 Gasket contact surfaces other than nozzle flange facings 23
9.7 Tube-to-tubesheet joints 23
9.8 Assembly 24
10 Inspection and testing 24
10.1 Quality assurance 24
10.2 Quality control 24
10.3 Pressure testing 26
10.4 Nameplates and stampings 26
11 Preparation for shipment 27
11.1 Protection 27
11.2 Identification 27

Documents
Document Sharing Hub

© ISO 2012 – All rights reserved

Full document details: BS EN ISO 12212:2012

12 Supplemental requirements **28**
12.1 General **28**
12.2 Design **28**
12.3 Examination **28**

Annex A (informative) **Recommended practices** **30**

Annex B (informative) **Hairpin heat exchanger checklist** **32**

Annex C (informative) **Hairpin heat exchanger data sheets** **34**

Bibliography **45**

© ISO 2012 – All rights reserved

Documents
Document Sharing Hub

Full document details: BS EN ISO 12212:2012

Foreword

ISO (the International Organization for Standardization) is a worldwide federation of national standards bodies (ISO member bodies). The work of preparing International Standards is normally carried out through ISO technical committees. Each member body interested in a subject for which a technical committee has been established has the right to be represented on that committee. International organizations, governmental and non-governmental, in liaison with ISO, also take part in the work. ISO collaborates closely with the International Electrotechnical Commission (IEC) on all matters of electrotechnical standardization.

International Standards are drafted in accordance with the rules given in the ISO/IEC Directives, Part 2.

The main task of technical committees is to prepare International Standards. Draft International Standards adopted by the technical committees are circulated to the member bodies for voting. Publication as an International Standard requires approval by at least 75 % of the member bodies casting a vote.

Attention is drawn to the possibility that some of the elements of this document may be the subject of patent rights. ISO shall not be held responsible for identifying any or all such patent rights.

ISO 12212 was prepared by Technical Committee ISO/TC 67, *Materials, equipment and offshore structures for petroleum, petrochemical and natural industries*, Subcommittee SC 6, *Processing equipment and systems*.

© ISO 2012 – All rights reserved

Documents
Document Sharing Hub
Full document details: BS EN ISO 12212:2012

Introduction

It is necessary that users of this International Standard be aware that further or differing requirements can be needed for individual applications. This International Standard is not intended to inhibit a vendor from offering, or the purchaser from accepting, alternative equipment or engineering solutions for the individual application. This can be particularly applicable where there is an innovative or developing technology. Where an alternative is offered, it is the responsibility of the vendor to identify any variations from this International Standard and provide details.

This International Standard requires the purchaser to specify certain details and features.

A bullet (●) at the beginning of a clause or subclause indicates a requirement for the purchaser to make a decision or provide information (for information, a checklist is provided in Annex B).

In this International Standard, where practical, US Customary (USC) or other units are included in parentheses for information.

© ISO 2012 – All rights reserved
Documents
Document Sharing Hub
Full document details: BS EN ISO 12212:2012

INTERNATIONAL STANDARD ISO 12212:2012(E)

Petroleum, petrochemical and natural gas industries — Hairpin-type heat exchangers

1 Scope

This International Standard specifies requirements and gives recommendations for the mechanical design, materials selection, fabrication, inspection, testing and preparation for shipment of hairpin heat exchangers for use in the petroleum, petrochemical and natural gas industries.

Hairpin heat exchangers include double-pipe and multi-tube type heat exchangers.

2 Normative reference

The following referenced documents are indispensable for the application of this document. For dated references, only the edition cited applies. For undated references, the latest edition of the referenced document (including any amendments) applies.

ISO 15156 (all parts), *Petroleum and natural gas industries — Materials for use in H_2S-containing environments in oil and gas production*

ISO 23251, *Petroleum, petrochemical and natural gas industries — Pressure-relieving and depressuring systems*

ASME B16.5[1)], *Pipe Flanges and Flanged Fittings: NPS 1/2 through NPS 24 Metric/Inch Standard*

NACE MR0103[2)], *Materials Resistant to Sulfide Stress Cracking in Corrosive Petroleum Refining Environments*

NACE SP0472, *Methods and Controls to Prevent In-Service Environmental Cracking of Carbon Steel Weldments in Corrosive Petroleum Refining Environments*

TEMA[3)], *Standards of the Tubular Exchanger Manufacturers Association*

3 Terms and definitions

For the purposes of this document, the following terms and definitions apply.

3.1
cyclic service
process operation with periodic variation in temperature, pressure and/or flowrate

1) ASME International, 3 Park Avenue, New York, NY 10016-5990, USA.

2) NACE International, P.O. Box 218340, Houston, TX 77218-8340, USA.

3) Tubular Exchanger Manufacturers Association, 25 North Broadway, Tarrytown, NY 10591, USA.

© ISO 2012 – All rights reserved

Documents
Document Sharing Hub
Full document details: BS EN ISO 12212:2012

3.2
double-pipe
single pipe within a shell

3.3
effective heat transfer area
outside surface area of the tubes that contributes to heat transfer including finned surface area (if any)

3.4
full-penetration weld
welded joint that results in weld metal through the entire thickness of the components being joined

3.5
front closure
closure that connects the tube side to purchaser's tube side piping and fixes the tube bundle or element to the shell

3.6
hairpin heat exchanger
double-pipe (pipe-in-pipe) or multi-tube heat exchanger of two-leg bundle where each leg has its own separate shell

NOTE Figure 1 shows typical components of a hairpin heat exchanger.

3.7
heat exchanger unit
one or more heat exchangers arranged in series or parallel for a specified service that work together to perform the intended duty

3.8
hydrogen service
service that contains hydrogen at a partial pressure exceeding 700 kPa (100 psi) absolute

3.9
item number
purchaser's identification number for a hairpin heat exchanger

3.10
minimum design metal temperature
lowest metal temperature at which pressure-containing elements can be subjected to design pressure

EXAMPLES Ambient temperature or process fluid temperature.

3.11
multi-tube
multiple tubes within a shell

3.12
pressure design code
recognized pressure vessel standard specified or agreed by the purchaser

EXAMPLES ASME BPVC, Section VIII; EN 13445 (all parts).

3.13
rear closure
closure used at the return end of the heat exchanger which covers the u-bends

3.14
sealing ring
special gasket that provides a seal on the OD of tubesheet and the shell/tube side flange

© ISO 2012 – All rights reserved
Documents
Document Sharing Hub
Full document details: BS EN ISO 12212:2012

3.15
hairpin section
one U-tube element with two shell legs

3.16
seal-welded
tube-to-tubesheet joint weld of unspecified strength applied between the tubes and tubesheets for the sole purpose of reducing the potential for leakage

3.17
strength-welded
tube-to-tubesheet joint welded so that the design strength is equal to, or greater than, the axial tube strength specified by the pressure design code

3.18
structural welding code
recognized structural welding code specified or agreed by the purchaser

3.19
tube bundle
assembly of U-tubes, tube sheet and baffles where the tubes can be plain or finned

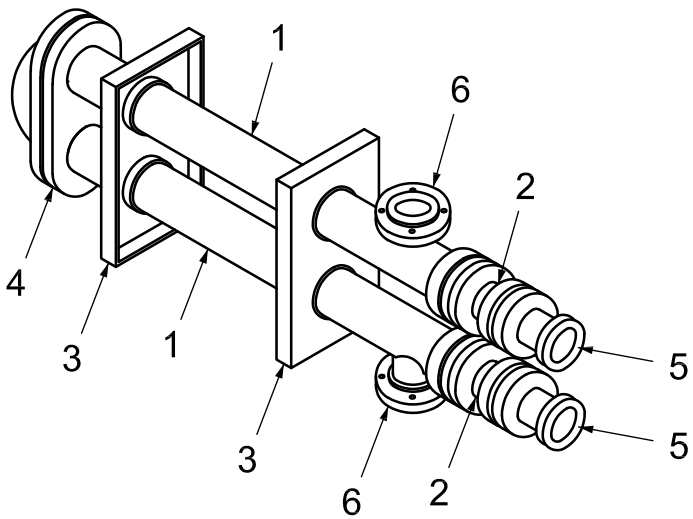

Key

1	shell	4	rear closure
2	front closure	5	tube side connection
3	support	6	shell side connection

Figure 1 — Typical components of a hairpin heat exchanger

4 General

4.1 The pressure design code shall be specified or agreed by the purchaser. Pressure components shall comply with the pressure design code and the supplemental requirements in this International Standard.

4.2 Where the use of TEMA is specified within this International Standard, the heat-exchanger construction shall conform to TEMA, Class R, unless another TEMA class is specified.

4.3 Hairpin exchangers typically do not require expansion joints. However, it can be necessary to evaluate some units to assess the requirement for an expansion joint. For such cases, the purchaser and vendor shall agree to all relevant design, fabrication, inspection and testing requirements.

Documents
Document Sharing Hub

© ISO 2012 – All rights reserved

Full document details: BS EN ISO 12212:2012

● **4.4** The vendor shall comply with the applicable local regulations specified by the purchaser.

4.5 Annex A includes recommended mechanical and design details for information.

4.6 Annex B provides a checklist that can be used by the purchaser to ensure that bulleted items in this International Standard are addressed.

● **4.7** The purchaser shall specify whether the service is designated as sour in accordance with ISO 15156 (all parts) for oil and gas production facilities and natural gas sweetening plants, or designated as wet hydrogen sulfide service in accordance with NACE MR0103 for other applications (e.g. petroleum refineries, LNG plants and chemical plants), in which case all materials in contact with the process fluid shall meet the requirements of the applicable standard to mitigate potential for sulfide stress cracking (SSC). Identification of the complete set of materials, qualification, fabrication and testing specifications to prevent in-service environmental cracking is the responsibility of the user (purchaser).

NOTE For the purpose of this provision, NACE MR0175 is equivalent to ISO 15156 (all parts).

5 Proposal information required

5.1 The vendor's proposal shall include, for each heat exchanger unit, completed data sheets such as those given in Annex C.

5.2 For components that are not fully identified by Clause 3, the vendor shall describe the details of construction and assembly.

5.3 The proposal shall include a detailed description of all exceptions to the requirements of the purchaser's inquiry.

5.4 For stacked heat exchangers, the vendor shall supply the following components unless otherwise specified by the purchaser:

a) bolts, nuts and gaskets for interconnecting nozzles;

b) shims and bolting for interconnecting supports;

c) external, interconnecting tube side piping.

5.5 The vendor shall supply a recommended spare parts list for each hairpin heat exchanger.

6 Drawings and other required data

6.1 Outline drawings and other supporting data

6.1.1 The vendor shall submit, for review by the purchaser, outline drawings for each heat exchanger unit. The drawings shall include the following information:

a) service, item number, project name and location, purchaser's order number, vendor's shop order number and other special identification numbers;

b) design pressure, test pressure, maximum design temperature, minimum design metal temperature and any restriction on testing or operation of the heat exchanger;

c) maximum allowable working pressure (MAWP) in the corroded condition and at the design temperature for the shell side and tube side;

d) connection sizes, location, orientation, projection, direction of flow and, if flanged, the rating and facing;

© ISO 2012 – All rights reserved
Documents
Document Sharing Hub
Full document details: BS EN ISO 12212:2012

e) coupling sizes, rating and orientation;

f) dimensions, orientation and location of supports, including bolt holes and slots, and the stacking arrangement;

g) overall dimensions of the heat exchanger;

h) tube bundle removal clearance;

i) mass of the heat exchanger, empty and full of water, and of removable components with a mass greater than 25 kg (60 lb), (e.g. removable tube bundle, individual front closure and rear closure);

j) specified corrosion allowance for each side of the heat exchanger;

k) references to the applicable code and the purchaser's specification;

l) requirements for post-weld heat treatment;

m) requirements for NDE examination;

n) requirements for material impact testing;

o) requirements for surface preparation and painting;

p) gasket materials;

q) insulation thickness;

r) location and orientation of nameplates, lifting lugs, grounding clips or other attachments;

s) location of the centre of gravity of the exchanger for empty and full of water;

t) material specifications and grades for all components;

u) forces and moments on connections as specified by the purchaser;

v) tube-to-tubesheet joint welding and testing procedures.

6.1.2 The vendor shall recommend the tools required for the assembly and maintenance of the hairpin heat exchanger. If torquing of bolts is required, the vendor shall provide torquing procedures.

6.1.3 The review of engineering documents by the purchaser shall not relieve the vendor of the responsibility of meeting the requirements of the purchase order.

6.2 Information required after outline drawings are reviewed

6.2.1 Generic gasket information, including type and material, shall be provided.

6.2.2 Upon receipt of the purchaser's review comments on the outline drawings, the vendor shall submit copies of all detailed (non-proprietary) drawings. These shall fully describe the heat exchanger and shall include at least the following information:

a) full views and cross-sectional views including tube bundle details with dimensions and materials;

b) bundle details, including the following:

— tube layout,

© ISO 2012 – All rights reserved

Documents
Document Sharing Hub
Full document details: BS EN ISO 12212:2012

— number of baffles, type and description (for segmental baffles include cross-baffle cut, layout and orientation in a view that shows the cut),

— details and locations of all sealing and sliding strips;

c) details of each pressure-retaining weld, including weld material, weld nominal thickness, weld location and applicable non-destructive examination method;

d) details of each weld and weld nominal thickness for non-pressure attachments welded to pressure parts and for all load bearing attachments;

e) complete bills of materials, including the material specifications and part numbers for all proprietary components;

f) details of cladding and weld overlay;

g) details of tube-to-tubesheet joints, including procedures for installation, welding, expansion, inspection and testing;

h) flange-face finish.

● **6.2.3** If specified by the purchaser, the vendor shall furnish copies of applicable welding procedure specifications, procedure qualifications and weld map for review or record.

● **6.2.4** The purchaser shall specify whether the vendor shall furnish for the purchaser's review or record the following documentation:

a) mechanical design calculations for shell thickness, tube thickness, nozzle reinforcement and other non-proprietary pressure-retaining components. If calculations are made using computer softward, all input and output data shall be detailed so as to facilitate an understanding of the calculation procedures. The equations in the applicable sections of the pressure design code and TEMA shall be referenced;

b) minimum required thicknesses for all pressure-retaining components, whether they are proprietary or non-proprietary;

c) maximum allowable working pressure calculations (MAWP);

d) design calculations based on seismic, wind, transportation and/or piping loads, if these loads are provided by the purchaser;

e) proposed procedures for assembly of flanged joints. Any required lubricants shall be stated;

f) design calculations for thermal loads imposed on nozzles of stacked heat exchangers;

g) flow-induced vibration analysis;

h) where sour or wet hydrogen sulfide service is specified, a Certified Material Test Report (CMTR) shall be supplied for all carbon steel materials in contact with the process fluid.

6.3 Reports and records

● After the heat exchanger is completed, the vendor shall furnish the purchaser with the following documents in the format and quantities specified by the purchaser:

a) “as-built” data sheet;

b) all outline and non-proprietary detail drawings, marked “CERTIFIED AS-BUILT”;

c) certified record of all impact tests performed;

© ISO 2012 – All rights reserved
Documents
Document Sharing Hub
Full document details: BS EN ISO 12212:2012

d) certified mill test reports for all pressure-retaining parts, including tubes (each material test report shall be identified by a part number);

e) complete certified bill of materials suitable for obtaining all replacement parts, including quantity, description, material specification and identification of each part;

f) temperature charts of all post-weld heat treatments;

g) completed manufacturer's data report in accordance with the pressure design code;

h) nameplate rubbing or a facsimile;

i) all as-built mechanical design calculations;

j) non-destructive examination (NDE) map;

k) all associated NDE reports, including radiographic, magnetic-particle, liquid-penetrant, ultrasonic, hardness, impact, positive material identification (PMI) and any other reports as applicable;

l) tube-wall reduction results;

m) tube-to-tubesheet leak-test results;

n) hydrostatic test records in the form of a chart or certification;

o) installation and maintenance instructions including lifting, handling and bundle removal.

7 Design

7.1 Design temperature

● **7.1.1** All heat exchangers shall have two design temperatures for each side, a maximum design temperature and a minimum design metal temperature (MDMT), as specified by the purchaser.

7.1.2 The design temperature of a component (including external bolting) influenced by both the shell side and tube side fluids shall be the more severe design temperature.

7.2 Design pressure

7.2.1 Unless otherwise specified or approved by the purchaser, the heat exchanger shall be designed for design pressure on either side, with atmospheric pressure or, if specified, vacuum on the other side.

7.2.2 If the purchaser specifies that a calculation of maximum allowable working pressure (MAWP) is required, there shall be no restrictions on what components can limit the MAWP of the hairpin heat exchanger. The MAWP shall be as defined in the applicable pressure design code and should be based on all simultaneously existing external loads such as nozzle loads. The presence of external loadings reduces the value of MAWP relative to the case where pressure is the only load present.

7.3 Cyclic design

● **7.3.1** The purchaser shall specify if cyclic service design is required.

● **7.3.2** If cyclic service is specified, the purchaser shall specify the variation, the time for the variation (hours, weeks, months, etc.) and the number of cycles or frequency for this variation expected during the life of the equipment.

● **7.3.3** If cyclic service is specified, the purchaser shall define the type of analysis required.

© ISO 2012 – All rights reserved

Documents
Document Sharing Hub
Full document details: BS EN ISO 12212:2012

7.4 Shell

7.4.1 The minimum thickness of the shell shall conform to TEMA, Class R, unless another TEMA class is specified. For shell diameters smaller than those covered by TEMA, at least schedule 40 for carbon steel and low-alloy steel and schedule 10 S for high alloy material shall be used.

7.4.2 Spiral welded pipe shall not be used.

7.5 Front closure

7.5.1 Front closures are typically of a proprietary design utilizing either a common set of bolts (as shown in Figure 2) or separate shell side and tube side bolting (as shown in Figure 3).

7.5.2 Separate shell side and tube side bolting shall be used in the following conditions:

a) for services where the differential temperature (design or operating, whichever is greater) across the tubesheets is greater than 220 °C (400 °F);

b) design pressure for either side exceeds 7 000 kPa (ga) (1 000 psig);

c) cyclic service;

d) hydrogen service;

e) when specified by the purchaser.

7.5.3 In units where the shell side and tube side share a common set of bolts, the design temperature used for the bolting shall be the more severe of the shell side or tube side design temperature. For such units, if the manufacturers design utilizes an intermediate or centre flange with threaded bolt holes, this centre flange shall be designed for the more severe of the shell side or tube side design temperature as well as the higher of the shell side or tube side design pressure.

7.5.4 Corrosion allowances shall not be applied to split rings.

© ISO 2012 – All rights reserved
Documents
Document Sharing Hub
Full document details: BS EN ISO 12212:2012

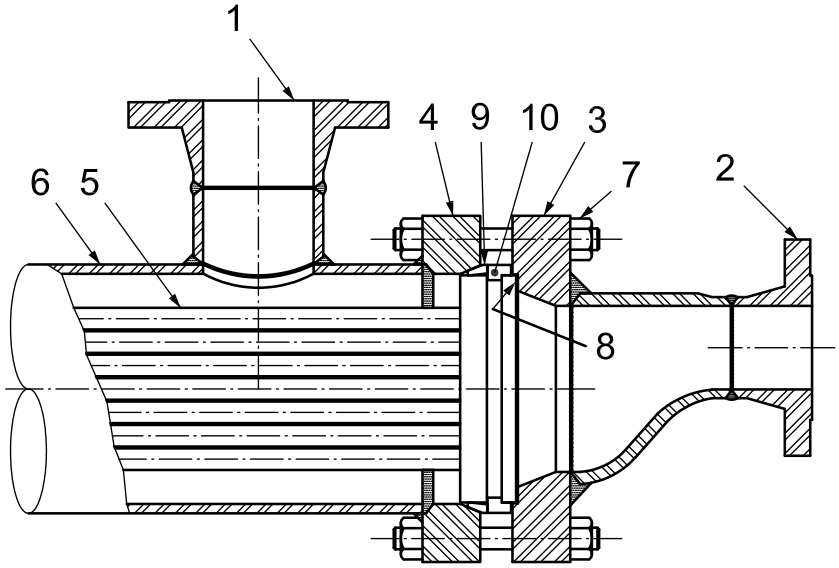

Key

1	shell nozzle flange	6	shell pipe
2	tube nozzle flange	7	closure bolting
3	tube flange	8	tube gasket
4	shell end flange	9	sealing ring
5	tube bundle or element	10	shell closure split ring

NOTE This is only a typical configuration. Other configurations are equally acceptable, e.g. the front closure can have a concentric reducer, an eccentric reducer orientated flat-bottom or no reducer at all. Similarly, key item 2 can be absent with the tube side connection being a simple butt-welded preparation. For non-removable front closures, flanges, bolting and gaskets are eliminated.

Figure 2 — Typical front closure

© ISO 2012 – All rights reserved

Documents
Document Sharing Hub
Full document details: BS EN ISO 12212:2012