BS EN ISO 12215-10:2020

BSI Standards Publication

Small craft — Hull construction and scantlings

Part 10: Rig loads and rig attachment in sailing craft

Documents
Document Sharing Hub

Full document details: BS EN ISO 12215-10:2020

National foreword

This British Standard is the UK implementation of EN ISO 12215-10:2020. It is identical to ISO 12215-10:2020.

The UK participation in its preparation was entrusted to Technical Committee GME/33, Small craft.

A list of organizations represented on this committee can be obtained on request to its secretary.

This publication does not purport to include all the necessary provisions of a contract. Users are responsible for its correct application.

© The British Standards Institution 2020
Published by BSI Standards Limited 2020

ISBN 978 0 580 95858 8

ICS 47.080

Compliance with a British Standard cannot confer immunity from legal committee manager.

This British Standard was published under the authority of the Standards Policy and Strategy Committee on 30 November 2020.

Amendments/corrigenda issued since publication

Date	Text affected

Documents
Document Sharing Hub

Full document details: BS EN ISO 12215-10:2020

EUROPEAN STANDARD

NORME EUROPÉENNE

EUROPÄISCHE NORM

EN ISO 12215-10

November 2020

ICS 47.080

English Version

Small craft - Hull construction and scantlings - Part 10: Rig loads and rig attachment in sailing craft (ISO 12215-10:2020)

Petit navires - Contruction de la coque et échantillonnage - Partie 10: Charges dans le gréement et points d'attache du gréement dans les bateaux à voiles (ISO 12215-10:2020)

Kleine Wasserfahrzeuge - Rumpfbauweise und Dimensionierung - Teil 10: Takelagelasten und Takelagezubehör von Segelbooten (ISO 12215-10:2020)

This European Standard was approved by CEN on 22 February 2020.

CEN members are bound to comply with the CEN/CENELEC Internal Regulations which stipulate the conditions for giving this European Standard the status of a national standard without any alteration. Up-to-date lists and bibliographical references concerning such national standards may be obtained on application to the CEN-CENELEC Management Centre or to any CEN member.

This European Standard exists in three official versions (English, French, German). A version in any other language made by translation under the responsibility of a CEN member into its own language and notified to the CEN-CENELEC Management Centre has the same status as the official versions.

CEN members are the national standards bodies of Austria, Belgium, Bulgaria, Croatia, Cyprus, Czech Republic, Denmark, Estonia, Finland, France, Germany, Greece, Hungary, Iceland, Ireland, Italy, Latvia, Lithuania, Luxembourg, Malta, Netherlands, Norway, Poland, Portugal, Republic of North Macedonia, Romania, Serbia, Slovakia, Slovenia, Spain, Sweden, Switzerland, Turkey and United Kingdom.

EUROPEAN COMMITTEE FOR STANDARDIZATION
COMITÉ EUROPÉEN DE NORMALISATION
EUROPÄISCHES KOMITEE FÜR NORMUNG

CEN-CENELEC Management Centre: Rue de la Science 23, B-1040 Brussels

© 2020 CEN All rights of exploitation in any form and by any means reserved worldwide for CEN national Members.

Ref. No. EN ISO 12215-10:2020 E

Documents
Document Sharing Hub

Full document details: BS EN ISO 12215-10:2020

European foreword

This document (EN ISO 12215-10:2020) has been prepared by Technical Committee ISO/TC 188 "Small craft" in collaboration with CCMC.

This European Standard shall be given the status of a national standard, either by publication of an identical text or by endorsement, at the latest by May 2021, and conflicting national standards shall be withdrawn at the latest by May 2021.

Attention is drawn to the possibility that some of the elements of this document may be the subject of patent rights. CEN shall not be held responsible for identifying any or all such patent rights.

This document has been prepared under a mandate given to CEN by the European Commission and the European Free Trade Association.

According to the CEN-CENELEC Internal Regulations, the national standards organizations of the following countries are bound to implement this European Standard: Austria, Belgium, Bulgaria, Croatia, Cyprus, Czech Republic, Denmark, Estonia, Finland, France, Germany, Greece, Hungary, Iceland, Ireland, Italy, Latvia, Lithuania, Luxembourg, Malta, Netherlands, Norway, Poland, Portugal, Republic of North Macedonia, Romania, Serbia, Slovakia, Slovenia, Spain, Sweden, Switzerland, Turkey and the United Kingdom.

Endorsement notice

The text of ISO 12215-10:2020 has been approved by CEN as EN ISO 12215-10:2020 without any modification.

Documents
Document Sharing Hub

Full document details: BS EN ISO 12215-10:2020

Contents

Page

Foreword ..... **v**

Introduction ..... **vi**

1 Scope **1**

2 Normative references **1**

3 Terms and definitions **1**

4 Symbols **3**

5 Application of the document **4**
5.1 General 4
5.2 The simplified method 4
5.3 The developed method 4
5.4 Steps of the methods and corresponding clauses of this document 5

6 Simplified and developed methods — Design stresses **6**
6.1 General 6
6.2 Design load vs safety factor 7

7 Developed method — General assessments, design moment **8**
7.1 General 8
7.1.1 General topics on rigging design 8
7.1.2 Sail configurations: 9
7.1.3 Rigging loads and adjustment information to be provided 9
7.2 Design moment M_D: righting or heeling moment 10
7.2.1 General 10
7.2.2 Principle of design 10
7.2.3 Topics on multihulls/form stable sailing craft corresponding to case b) i.e. with $M_{H1} < M_{R\ UP1}$ 13
7.2.4 Downwind longitudinal force F_{ADOWN} and nose trimming moment M_{HDOWN}, running under spinnaker alone — "Normal" (S_{c6}) or "exceptional" (S_{c8}) 14
7.2.5 Maximum righting moment M_{RMAX}, exceptional case, reaching under spinnaker 14
7.2.6 Heeling force $F_{ABROACH}$ and heeling moment $M_{HBROACH}$ while broaching under spinnaker, exceptional case 14
7.2.7 Minimum sail configuration and righting/heeling moment to be analyzed 14
7.3 Rig dimensions, and default values for areas, forces and points of application 15
7.4 Wing masts 21
7.5 Resultant forces in sails 22

8 Loads in rigging elements — Developed method **23**
8.1 General 23
8.2 Force in forestay, inner forestay, mainsail leech and on halyards 23
8.2.1 General 23
8.2.2 Force in forestay, inner forestay, mainsail leech and on halyards connected with sag 24
8.2.3 Force in forestay to balance the longitudinal component of forces from aft set shrouds, fixed/running backstays, mainsail leech 24
8.3 Force in backstay, running backstays, or equivalent 24
8.3.1 General 24
8.3.2 Fractional rig with fixed backstay, no running backstay and aft angled spreaders 25
8.3.3 Case of rigs without fixed nor running backstay 25
8.4 Compression in the mast step/pillar 27
8.4.1 General 27
8.4.2 Initial mast compression due to pre-stressing 27

AVA Documents
Document Sharing Hub

© ISO 2020 – All rights reserved

Full document details: BS EN ISO 12215-10:2020

8.4.3 Mast compression due to heeling or broaching 28
8.4.4 Design compression in the mast step/pillar 28
8.4.5 Detail topics on mast step/pillar 28
8.5 Final design load on rig elements 28

9 Structural components to be assessed — Simplified or developed method 29
9.1 General 29
9.2 Mast steps and mast pillars and their connection to the craft's structure 29
9.3 Chainplates and their connections to the craft's structure 29
9.4 Design details of chainplates and their connection to the structure 30
9.4.1 General 30
9.4.2 Strapped FRP chainplates 30

10 Application of the simplified method 31

11 Application of the developed method 31
11.1 General 31
11.2 General guidance for assessment by 3-D numerical procedures 31
11.2.1 General 31
11.2.2 Material properties 32
11.2.3 Boundary assumptions 32
11.2.4 Load application 32
11.2.5 Model idealization 32
11.3 Assessment by ‘strength of materials’ based methods 32

12 Application of this document 32

13 Information in the owner's manual 32

14 Information to the boat builder 33

Annex A (informative) **Application sheet of ISO 12215-10 34**

Annex B (informative) **Information on metals and bolts 36**

Annex C (normative) **Simplified "established practice" for mast step/pillar assessment 40**

Annex D (normative) **Simplified "established practice" for the assessment of chainplatesand their connection 47**

Annex E (informative) **Simplified "established practice" calculation oftransverse rig elements — Examples 69**

Bibliography 77

© ISO 2020 – All rights reserved
Documents
Document Sharing Hub
Full document details: BS EN ISO 12215-10:2020

Foreword

ISO (the International Organization for Standardization) is a worldwide federation of national standards bodies (ISO member bodies). The work of preparing International Standards is normally carried out through ISO technical committees. Each member body interested in a subject for which a technical committee has been established has the right to be represented on that committee. International organizations, governmental and non-governmental, in liaison with ISO, also take part in the work. ISO collaborates closely with the International Electrotechnical Commission (IEC) on all matters of electrotechnical standardization.

The procedures used to develop this document and those intended for its further maintenance are described in the ISO/IEC Directives, Part 1. In particular the different approval criteria needed for the different types of ISO documents should be noted. This document was drafted in accordance with the editorial rules of the ISO/IEC Directives, Part 2 (see www.iso.org/directives).

Attention is drawn to the possibility that some of the elements of this document may be the subject of patent rights. ISO shall not be held responsible for identifying any or all such patent rights. Details of any patent rights identified during the development of the document will be in the Introduction and/or on the ISO list of patent declarations received (see www.iso.org/patents).

Any trade name used in this document is information given for the convenience of users and does not constitute an endorsement.

For an explanation of the voluntary nature of standards, the meaning of ISO specific terms and expressions related to conformity assessment, as well as information about ISO's adherence to the World Trade Organization (WTO) principles in the Technical Barriers to Trade (TBT), see www.iso.org/iso/foreword.html.

This document was prepared by ISO/TC 188, *Small craft*.

A list of all parts in the ISO 12215 series can be found on the ISO website.

Any feedback or questions on this document should be directed to the user's national standards body. A complete listing of these bodies can be found at www.iso.org/members.html.

© ISO 2020 – All rights reserved

Documents
Document Sharing Hub
Full document details: BS EN ISO 12215-10:2020

Introduction

The reason underlying the preparation of the ISO 12215 series is that scantlings rules and recommended practices for small craft differ considerably, thus limiting the general worldwide acceptability of craft.

This document has been set towards the minimal requirements of the current practice.

The dimensioning according to this document is regarded as reflecting current practice, provided the craft is correctly handled in the sense of good seamanship and equipped and operated at a speed appropriate to the prevailing sea state.

This document is not a design standard and designers/builders are strongly cautioned from attempting to design craft such that nearly all structural components only just comply.

The connection between the rig attachment and the structure is required to be stronger than the rig attachment itself. It is therefore considered that unforeseen overload will not entail its detachment from the structure, and that the watertight integrity will be maintained.

© ISO 2020 – All rights reserved
Documents
Document Sharing Hub
Full document details: BS EN ISO 12215-10:2020

Small craft — Hull construction and scantlings —

Part 10:
Rig loads and rig attachment in sailing craft

1 Scope

This document specifies methods for the determination of:

— the design loads and design stresses on rig elements; and

— the loads and scantlings of rig attachments and mast steps/pillars;

on monohull and multihulls sailing craft.

It also gives, in Annexes, "established practices" for the assessment of mast steps/pillars or chainplates

NOTE 1 Other engineering methods can be used provided the design loads and design stresses are used.

This document is applicable to craft with a hull length L_H up to 24 m but it can also be applied to craft up to 24 m load line length.

NOTE 2 The load line length is defined in the OMI "International Load Lines Convention 1966/2005", it is smaller than L_H. This length also sets up, at 24 m, the lower limit of several IMO conventions.

Scantlings derived from this document are primarily intended to apply to recreational craft, including charter vessels.

This document is not applicable to racing craft designed only for professional racing.

This document only considers the loads exerted when sailing. Any loads that may result from other situations are not considered in this document.

Throughout this document, and unless otherwise specified, dimensions are in (m), areas in (m^2), masses in (kg), forces in (N), moments in (N m), stresses and elastic modulus in N/mm^2 (1 N / mm^2 = 1 Mpa). Unless otherwise stated, the craft is assessed in fully loaded ready for use condition.

2 Normative references

The following documents are referred to in the text in such a way that some or all of their content constitutes requirements of this document. For dated references, only the edition cited applies. For undated references, the latest edition of the referenced document (including any amendments) applies.

ISO 12215-5:2019, *Small craft — Hull construction and scantlings — Part 5: Design pressures for monohulls, design stresses, scantlings determination*

3 Terms and definitions

For the purposes of this document, the following terms and definitions apply.

ISO and IEC maintain terminological databases for use in standardization at the following addresses:

— ISO Online browsing platform: available at https://www.iso.org/obp

— IEC Electropedia: available at http://www.electropedia.org/

© ISO 2020 – All rights reserved

Documents
Document Sharing Hub
Full document details: BS EN ISO 12215-10:2020

3.1
design categories
description of the sea and wind conditions for which a craft is assessed to be suitable

Note 1 to entry: The design categories are defined in ISO 12217 (all parts).

Note 2 to entry: The definitions of the design categories are in line with the European Recreational Craft Directive 2013/53/EU.

[SOURCE: ISO 12215-5:2019, 3.1]

3.2
loaded displacement
m_{LDC}
mass of water displaced by the craft, including all appendages, when in the fully loaded ready-for-use condition

Note 1 to entry: The fully loaded ready-for-use condition is further defined in ISO 8666.

[SOURCE: ISO 12215-5:2019, 3.2]

3.3
sailing craft
craft for which the primary means of propulsion is wind power

Note 1 to entry: It is further defined in ISO 8666.

[SOURCE: ISO 12215-5:2019, 3.3, modified — Note 2 to entry deleted.]

3.4
monohull
craft with only one hull

3.5
multihull
craft with two or more hulls with a connecting wet deck/platform or beams above the loaded waterline, as opposed to a tunnel boat or scow

3.6
mast step
element fitted at the bottom of the mast that supports the mast compression and transmits it to the rest of the structure

3.7
mast pillar
pillar
in a deck stepped rig, structural element that transmits the mast compression to the rest of the structure

3.8
chainplate
rig attachment
component(s) to which the rig elements are attached, transmitting their load to the rest of the structure, including tie rods where relevant

EXAMPLE Metal chainplate, strapped composite chainplate,

Note 1 to entry: See Annex D.

© ISO 2020 – All rights reserved
Documents
Document Sharing Hub
Full document details: BS EN ISO 12215-10:2020

3.9
connection
<of mast step, pillar or chainplate to the structure> all elements or group of elements connecting the rig attachment to the structure of the craft

EXAMPLE Bolts, lamination.

Note 1 to entry: Some of these elements can be part of the chainplate.

3.10
m_{LDC} condition
maximum load condition corresponding to the *loaded displacement* (3.2)

4 Symbols

Unless specified otherwise, the symbols, factors and parameters given in Table 1 apply.

Table 1 — Symbols, factors, parameters

Symbol	Unit	Designation/Meaning of symbol	Reference
1 - Main dimensions of the craft			
B_{CB}	m	Beam between centers of buoyancy: between center of buoyancy of hulls, for catamarans; and between C_B of center hull and C_B of float, for trimarans	Table 5, Fig 3
B_{CP}	m	Beam between chainplates (from port to starboard)	Table C.1, Fig 3
B_H	m	Beam of hull	It 1 of Table 5
GZ_{30}	m	Righting lever at 30° heel for monohulls	Table 5
L_{WL}	m	Length of waterline in m_{LDC} condition	7.5, Table 10
V_{CG}	m	Height of craft center of gravity above T_C bottom	Table 5, Fig 3
m_{LDC}	kg	Loaded displacement mass (3.2) or condition (3.10)	3.2, Clause 13
n_{PH}	1	Number of persons hiking	It 1 of Table 5
T_C	m	Draught of canoe body	Table 5, Fig 3
2 - Main dimensions of the rig and connected data			
A_i	m^2	Sail area, index *i* defining the sail name or combination	Tables 5 to 8 etc.
F_{Ai}	N	Aerodynamic force, index *i* defining which force it corresponds to	Tables 5 to 8
F_{DMC}	N	Design compression force on single mast step/pillar	8.4. Annex C
F_{DMCi}	N	Design compression force on mast step/pillar of two-masted rig where index *i* = 1 or 2	8.4. Annex C
M_D	Nm	Design moment under sail	Tables 5 and 6
M_{Hi}	Nm	Heeling moment, where index i = $_{UP, MAX, BROACH, DOWN}$,	Tables 5 and 6
M_{Ri}	Nm	Righting moment, where index i = $_{UP}$, $\phi_{UP, MAX}$	Table 5
$V_{ACEK\ i}$	knots	Design apparent wind speed, in knots, at the center of area of sails, where index *i* stands for sail configuration S_{Ci}	Tables 5 and 7
$V_{ACEM\ i}$	m/s	Design apparent wind speed, in m/s, at the center of area of sails, where index *i* stands for sail configuration S_{Ci}	Tables 5 and 7
$V_{AMT\ i}$	m/s (knots)	Design apparent wind speed at mast top, where index *i* stands for sail configuration S_{Ci}	Note 5 in Table 5
See Table 8 for detailed dimensions of rig, areas, etc.			

© ISO 2020 – All rights reserved

Documents
Document Sharing Hub
Full document details: BS EN ISO 12215-10:2020

Table 1 *(continued)*

Symbol	Unit	Designation/Meaning of symbol	Reference
3 - Factors			
k_{DCR}	1	Design category factor for rig	It 5 of Table 3
k_{DSR}	1	Dynamic sail and rig factor	It 1 of Table 10
k_{HF}	1	Foresail center of pressure height factor	It 1of Table 9
k_{HMS}	1	Mainsail center of pressure height factor	It 3 of Table 9
k_{LC}	1	Load case factor	Tables 3 and 7
k_{MAT}	1	Material factor	It 3 of Table 3
k_{ROACH}	1	Roach factor	Table 8
k_{SAGF}	1	Forestay or inner forestay sag factor = stay sag sagitta/stay length	It 3 of Table 10
k_{SAGM}	1	Mainsail leech sag factor	It 3 of Table 10
k_{ϕ}	1	Factor assessing heel angle of multihulls	It 1 of Table 5
4 - Other variables			
S_{Ci}	1	Sail configuration where *i* is the configuration index	Table 7
S_{Fi}	1	Safety factor against *i*, the index *i* being y (yield) or u (ultimate)	Table 4
σ_i, τ_i	N/mm^2	Direct or shear stress, where *i* may be LIM, u, uw, yw, uc, ut, uf	Table 3
ϕ	degree	Heel angle, which may be 30° for monohulls or ϕ_{LIM} for multihulls	Table 5

5 Application of the document

5.1 General

This document allows the determination of the design loads and design stresses on rig elements of sailing small craft and to assess the design loads on mast step/pillar and chainplates and their connection to the craft's structure:

1) by a simplified method, or

2) by a developed method.

These methods are defined step by step in Table 2.

The developed method also allows to determine the rig loads needed to assess the global loads in the structure of multihulls in ISO 12215-7:2020.

5.2 The simplified method

Clause 14 requires that the mast/rig manufacturer provide the design load on mast steps/pillars and on each rig element, the dimensions of end fittings, etc. assessed according to 7.1.3. If this information is not available, the "Simplified method" applies through "Established practice" Annexes: Annex C for "basic" or "enhanced" methods for mast steps/pillars, or Annex D for chainplates or their connections.

5.3 The developed method

This method involves the full determination of the design loads on mast steps/pillars and on each rig element, the dimensions of end fittings, etc. assessed according to Clause 7. The assessment of the mast step(s), mast pillar(s), chainplates, and their connections to the craft shall then be checked either by the

© ISO 2020 – All rights reserved
Documents
Document Sharing Hub
Full document details: BS EN ISO 12215-10:2020

"Established practice" methods of Annexes C and D or by any relevant engineering method, including finite elements methods (FEM).

NOTE The actual dimensioning of mast and rig being a complex mast bending and buckling problem, where the tuning of rig elongation is paramount, mast scantlings are purposely left out of the scope of this document, even if the values of the loads defined is a useful information.

5.4 Steps of the methods and corresponding clauses of this document

Table 2 sums up the steps for both methods and gives the corresponding Clauses of this document.

Table 2 — Assessment methods

Step	Methods	Clause & Table
	1- SIMPLIFIED METHOD for mast step/pillar or chainplate	5.2
1.1	Design stress determination	Clause 6 and Table 3
1.2	If no information is available from the mast/rig manufacturer/provider, the "Established practice" methods of Annex C -"basic" or "enhanced"- allow a simple determination of the design compression force F_{DMC} and scantlings of mast steps/pillars and their connections to the structure. Tables C.4 and C.5 also give examples of mast step/pillar floor calculation according to the design force.	Annex C
1.3	For chainplates and their connection, use the "Established practice" of Annex D	Annex D
1.4	Structural components to be assessed – mast step or chainplate	Clause 9
1.5	Use of the Annexes for the simplified method	Clause 10
1.6	Application of this document and application sheet	Clause 12, Annex A
1.7	Information in the owner's manual	Clause 13
1.8	Information to be given to the boatbuilder from rig/mast manufacturer/provider	Clause 14
	2- DEVELOPED METHOD for rig load, mast step/pillar or chainplate Computation of all the loads in the rig	5.3
2.1	Design stress determination	Clause 6 and Table 3
2.2	Developed method - General assessments, design moment Determination of the design moments/forces according to sail configuration S_{Ci}: — Formulas for the determination of upwind design moments and forces — Formulas for the determination of downwind design moments and forces — Sail configurations, design heeling/righting moments and apparent wind speed — Rig dimensions and default values for dimensions, areas and point of application — Transverse forces on sails	Clause 7 and: 7.2 and Table 5 7.2 and Table 6 7.2 and Table 7 7.3 and Table 8 7.5 and Table 9
2.3	Design loads in rigging elements: — Forces in forestay, inner forestay, mainsail leech and halyards — Forces in backstay or running backstay or equivalent	Clause 8 and: 8.2 and Table 10 8.3 and Table 10
2.4	Structural components to be assessed – mast step or chainplate	Clause 9
2.6	Application of the developed method	Clause 11
2.7	Application of this document and application declaration	Clause 12, Annex A
2.8	Information in the owner's manual	Clause 13
2.9	Information to the boatbuilder	Clause 14

© ISO 2020 – All rights reserved

Documents
Document Sharing Hub
Full document details: BS EN ISO 12215-10:2020

6 Simplified and developed methods — Design stresses

6.1 General

The design stresses defined in Table 3 shall be used.

NOTE They are similar to those used in ISO 12215-9:2012, except that the dynamic factor for rig k_{DSR} increases the loads for light craft and therefore have a "dynamic behavior", see Item 1 of Table 10.

This document differentiates two types of load cases: "Normal" and "Exceptional", see 7.1, which means two different design stresses.

The stresses are obtained by multiplying, where relevant, see Tables 2 and 3, the actual stresses σ_{act}, $\tau_{act,}$ etc. by k_{DSR}, and they shall not be greater than the design stresses σ_d, τ_d, etc.

The "limit" stresses σ_{LIM} or τ_{LIM} are given in Table 3 and correspond to the following stress states:

— for metals, the one-letter subscripts for the stresses below are: y, for yield, and u, for ultimate; the second character of the two-letter subscripts is w, for welded state within heat affected area (see table footnote a in Table 3),

— for FRP and wood, the second character of the subscripts, u, means ultimate stress; the first character respectively is t, for tensile, c, for compressive, and f, for flexural or bearing stress.

The sources for the values of these stresses, i.e. σ_y, σ_u or τ_u for non-welded metals, or σ_{yw}, σ_{uw} or τ_{uw} for welded metals in heat affected zones, or σ_{tu}, σ_{cu}, $\sigma_{fu,}$ σ_{bu} or τ_u for wood and FRP shall be:

— either the "default" values according to Annexes B or D or to written data provided by the rig manufacturer/provider;

— for other metals than the ones used in rig, according to Annex B for the listed metals, or documented values for other metals, from a recognized standard, or from tests made according to a recognized standard;

— for FRP or wood/plywood, respectively according to Annexes C or F of ISO 12215-5:2019.

Table 3 — Design stress and adjustment factors

1 - Design stress		
σ_d or τ_d	$\sigma_d = \sigma_{LIM} \times k_{MAT} \times k_{LC} \times k_{DCR}$, or $\tau_d = \tau_{LIM} \times k_{MAT} \times k_{LC} \times k_{DCR}$ at yield, or ultimate, and bearing, as relevant, see 6.1 where the adjustments factors are defined below	
2 – Limit stress		
Limit stress	**Material / designation**	**Value**
σ_{LIM} or τ_{LIM}	Metals, unwelded or well clear of heat affected zones[a,b,c]	$\sigma_{LIM} = \min(\sigma_y;0{,}5\ \sigma_u)$ or $\tau_{LIM} = \min(\tau_y;0{,}5\ \tau_u)$
	Metals, within heat affected zones, in welded condition[a,b,c]	$\sigma_{LIM} = \min(\sigma_{yw};0{,}5\ \sigma_{uw})$ or $\tau_{LIM} = \min(\tau_{yw};0{,}5\ \tau_{uw})$
	Wood or FRP as dictated by sense of applied stress	(σ_{uc}, σ_{ut}, σ_{uf} and τ_u)[c] as relevant
3 - Stress factor for material k_{MAT}		
k_{MAT}	Metals with elongation at break $\varepsilon_R \geq 7$ %	$k_{MAT} = 0{,}75$
	Metals with elongation at break $\varepsilon_R < 7$ %	$k_{MAT} = \min(0{,}062\ 5\ \varepsilon_R + 0{,}312\ 5;0{,}75)$[d]
	Wood and FRP	$k_{MAT} = 0{,}33$

© ISO 2020 – All rights reserved
Documents
Document Sharing Hub
Full document details: BS EN ISO 12215-10:2020

Table 3 *(continued)*

4 - Values of load case factor k_{LC},[e,]				
			Type of load:	normal	exceptional
k_{LC}	Mast/rig	Metal		(1,11)	(1,33)
	Rig	Pure fibre		(1,30)	(1,56)
	Mast/rig	FRP or wood		(1,20)	(1,44)
	Step of mast/pillar, chainplate		Metal	1,10	1,32
	Step of mast/pillar, chainplate		FRP/Wood	1,05	1,26
	Strapped FRP chainplates		(UD straps only)[f]	0,35	0,42
	Connection of above to structure		Metal	0,92	1,10
	Connection of above to structure		FRP/wood (bolts, screws, etc.)	0,88	1,05
	Connection of above to structure		FRP co-cured or glued[f]	0,83	1,00
5 - Values of design category factor for rig k_{DCR}					
k_{DCR}	Craft of design categories A and B			1,00	
	Craft of design categories C and D			1,25	

[a] Generally the heat affected zone is considered within 50 mm from welds.

[b] For metals, $\tau = 0{,}58\ \sigma$ often rounded to 0,6 as in EN 1993.

[c] Bearing stress depends on material type and dimensions. Item 4 of Tables D.6 or D.7 gives recommended values. (See References [13] and [15]).

[d] The formula gives 0,75 for $\varepsilon_R \geq 7$ % (e.g. main building metals and ductile cast iron) and 0,375 for $\varepsilon_R < 7$ % for lamellar graphite cast iron, with linear interpolation in between.

[e] The design stresses correspond either to "normal" or "exceptional" cases in Table 7, the "exceptional" stresses are 120 % the "normal "stresses i.e. the safety factor is 83 % of normal stresses. The “normal” design loads for mast step/pillar or chainplates are 120 % of the ones for mast/rig, and the values of connection of mast step/chainplate to the structure is again 120 % of the mast step/chainplate i.e. 144 % of mast/rig loads. k_{LC} varies as the inverse of these ratios (see Table 4 for explanations).

[f] The values for the UD of strapped chainplate are low to take into account stress raisers during the UD path around the pin bushing, but this is not necessary for the co-curing/gluing of the whole chainplate, provided the correct glue allowable shear stress is valid, see D.6.

NOTE The design stresses in Table 3 and safety factors (S_{Fu} or S_{Fy}) in Table 4 and loads for rig and mast elements are between brackets, for information only, as they are not covered by this document. The safety factor at ultimate is stated (2,4) for metal rig but in practice it frequently varies between 2 and 3,5 for monohulls according to the practice of the builder/designer and the type of craft racing/cruising. For light multihulls if may go down to 1,5 for the ones that “lift a hull” as this situation is non-frequent (exceptional) except for sheer sports multihulls. In addition, the rig is frequently much stronger than stated to limit rig elongation for mast stability reasons, particularly for non-metal rigging system.

NOTE The lowering of k_{LC} (or increase of safety factor S_F) from rig load to mast step/chainplate, then their connection to structure ensures that the mast step/chainplate connection will be stronger that the mast compression/rig tension (i.e. the chainplate shall break after the rig), taking due consideration to the uncertainties of calculation of the connection effective stresses.

6.2 Design load vs safety factor

The applicable limit stresses in the first row of Table 3 are multiplied by several factors like k_{DCR}, design category factor, k_{MAT}, material factor, and k_{LC}, load case factor. As many users or regulations refer to safety factors, S_F, for comparison purposes Table 4 transforms the requirements of Tables 2 and 3 in terms of safety factors or equivalent. Taking R_y and R_u as respectively the yield and ultimate strength of a structural element, and F_{RIG} as the load in a rig element, it gives in the rows of Metal or FRP respectively the ratio R_y/F_{RIG}, or R_u/F_{RIG} with, special consideration for metal whether $\sigma_y > 0{,}5\ \sigma_u$ or $\sigma_y \leq 0{,}5\ \sigma_u$.

For simplicity, Table 4 only calculates in column 7 the safety factor at ultimate $S_{FU} = 1/(\sigma_d/\sigma_u)$, and in column 8 the ratio $S_{FU}/S_{FU\ RIG}$ for “normal “load cases, showing the progression of the safety factors

© ISO 2020 – All rights reserved

AVA Documents Document Sharing Hub
Full document details: BS EN ISO 12215-10:2020

from mast/rig to connection to the structure. For “exceptional” load cases, the safety factor is multiplied by 0,833 (i.e. divided by 1,2).

CAUTION — Table 4 shows the values for design categories A and B, with k_{DCR} = 1, for design categories C and D with k_{DCR} = 1,25, the safety factor is multiplied by 1/1,25 = 0,8 i.e. reduced by 20 %.

Table 4 — Values of the various safety factors computed from Table 3

1	2	3	4	5	6	7	8
					$\sigma_d = \sigma_{LIM} \times k_{MAT} \times k_{LC} \times k_{DCR} / \sigma_u$		
Load case description	σ_{LIM}/σ_u [a]	k_{MAT}	k_{DCR}	k_{LC} Normal	σ_d/σ_u	R_u rig /F rig $1/(\sigma_d/\sigma_u)$	$R_{U\ ELEM}$ /$R_{U\ RIG}$
Rig or mast load - Metal	0,50	0,75	1,0	1,11	0,42	(2,40)	(1,00)
Rig or mast load - Pure fibre rig	1,00	0,33	1,0	1,30	0,43	(2,33)	(0,97)
Mast load FRP - Mast	1,00	0,33	1,0	1,20	0,40	(2,53)	(1,05)
Chainplate/mast step - AISI 316	0,42	0,75	1,0	1,10	0,35	2,87	1,19
Chainplate/mast step - ALU 5086 H111	0,42	0,75	1,0	1,10	0,34	2,91	1,21
Chainplate - FRP	1,00	0,33	1,0	1,05	0,35	2,89	1,20
Strapped FRP chainplates (UD straps only)	1,00	0,33	1,0	0,35	0.08	8,66	3,6
Connection to structure metal	0,42	0,75	1,0	0,92	0,29	3,48	1,45
Connection to structure FRP/wood - direct stress	1,00	0,33	1,0	0,88	0,29	3,46	1,44
Connection to structure FRP co-cured /glued	1,00	0,33	1,0	0,83	0,27	3,65	1,52

[a] Examples of calculation of values in column 2: AISI 316 plate σ_{LIM}/σ_u = min (220;0,5×520)/520 = 0,5; aluminium 5086 H 111 welded or not σ_{LIM}/σ_u = min(100;0,5×240)/240 = 0,423 0.

7 Developed method — General assessments, design moment

7.1 General

7.1.1 General topics on rigging design

This document defines the required design loads on rig elements, but not their actual ultimate strength or strain (elongation). This is because shrouds and stays are frequently over dimensioned due to stiffness considerations to avoid mast buckling and limit the ‘fall-off’ of the mast to leeward. This is particularly true for non-metal rig. In contrary, this document defines design loads for the connection of the rig elements to their attachment or foundation (mast or pillar steps and rig attachment chainplates). The loads on multihull rig elements (loads on shroud and stays, mast compression, mainsheet pull) defined in this document are also useful to assess the global loads used in ISO 12215-7:2020.

The equilibrium between the various loads on the masts and their rigging (and therefore their attachments) is of paramount importance. The values considered in this document are the minimal ones corresponding to this balance, which needs a proper setting of the rig and complete "tuning", see 7.1.3. For these reasons, some professionals take larger safety factors than those in this document, both on the rig and mast dimensioning, but this extra margin is not considered here.

NOTE Reference [5] has a similar approach to this document on several points, but mainly for sailing monohulls larger than the scope of this document (L_H > 24 m) and with safety factors in line with Classification society rules, i.e.; usually larger than those in this document.

© ISO 2020 – All rights reserved
Documents
Document Sharing Hub
Full document details: BS EN ISO 12215-10:2020

7.1.2 Sail configurations:

Subclause 7.2.7 defines the sail configurations to be checked and the corresponding design forces and moments (righting or heeling), and for craft where heeling moment governs (case b), the apparent wind speed V_{ACEK1} (knots) or V_{ACEM1} (m/s) in sail configuration S_{C1} at sail center of effort (CE). The designer/manufacturer shall state the principal sail configurations assessed and to be used according to wind speed and direction (upwind, downwind, etc.). The designer/manufacturer shall either choose them by experience/tests or use the default proposed values of Table 7. The apparent wind speed values given in this table are however considered as close to minimal values for multihulls in case b) corresponding to global loads from rig experienced on sailing multihulls.

The designer/manufacturer shall include in the owner's manual (Clause 13):

— a table of recommended sail configurations and trimming according to apparent wind speed, course, sea state, etc.

  — for monohulls, it may be a simplified document;

  — for multihulls or for stable craft, this table may have a similar format to the one required by ISO 12217-2:2015, see NOTE 1, with actions to prevent capsize in gusts mainly in m_{MO} condition. This document, dedicated to strength, only considers the largest loads, i.e. in m_{LDC} condition, but for prevention of capsize, the owner's manual shall also and mainly consider the minimum operating condition m_{MO} as it is the condition more prone to capsize. In that case, the formulas for the heeling moment M_{H1} and the corresponding apparent wind speed V_{A1} at sail CE shall be lowered to m_{MO} condition.

    NOTE 1 This document deals with all sail configurations upwind and downwind, as explained in Table 7, and in m_{LDC} condition. For multihulls, the main purpose of ISO 12217-2:2015 is to prevent capsize in minimum operating condition; it only quotes upwind sail configurations, and only requires to use a "table similar" to its Table F.1. The paragraph above does not require the use of Table F.1 of ISO 12217-2:2015, but, for simplicity, the two tables can be combined into a single table.

    NOTE 2 As the apparent wind speed is measured by an anemometer, usually located at mast top, but sometimes lower on a pole, NOTE 4 of Table 5 proposes a classical wind gradient formula to calculate the apparent wind speed at a height different from sail CE. As this method depends on sea roughness, air turbulence, etc., the choice of the anemometer apparent wind speed given in the owner's manual is left to the craft/rig manufacturer.

— any other recommendations, such as, where relevant:

  — sail configurations to be avoided, with explanations e.g.: mainsail with 3 reefs + full genoa, or genoa alone in strong winds;

  — not to navigate under engine power against a choppy or steep sea without mainsail and without longitudinal staying set, as it may induce dynamic motions that may be dangerous for the mast and rig due to pitching, slamming; etc.

7.1.3 Rigging loads and adjustment information to be provided

The design of a mast/rig is the result of a choice of dimensioning its elements and of their correct setting up. For that purpose, the mast/rig provider shall give:

1) the design load of each of the rig element provided: mast step/pillar, shrouds, stays, etc., the dimensions of their end fittings, specifying whether this fitting, including its pin, corresponds to the design load or to a larger load. This information shall be included as per Clause 14. The definition of these loads shall either be assessed according to this document or from another documented method.

2) the recommended method of setting up/tuning the mast and its rigging through a specific notice delivered with the spars and rigging for the persons in charge of the mast/rig adjustment. This notice shall either be included as per Clause 14 (information for mast setup/rig tuning) or in a specific chapter of the owner's manual. This notice shall include the minimum and maximum values of pre-stressing applied to the rigging to guarantee its correct setting.

© ISO 2020 – All rights reserved

Documents
Document Sharing Hub
Full document details: BS EN ISO 12215-10:2020

The pre-stressing loads shall be given in terms of

— tensile forces to be applied to the standing rigging, and/or,

— shortening of the turnbuckles with respect to the state 0 ("slack of the rig" just transformed into "just under tension"). This allows an easy pre-setting by any person working on the rig without a suitable tensiometer. This will constitute a minimum value of pre-stressing to be induced on the standing rigging, as the deflection of the craft will reduce the stress, particularly on multihulls. Non-metal shrouds and stays will usually need a much greater length reduction/number of turns of the turnbuckles as the E modulus is usually smaller.

At the end of this initial check, it is recommended that the shortening lengths be included as per Clause 14 or Clause 13 by the agent or dealer delivering the craft to its owner/user to allow the rigging adjustment to be resumed correctly after dismasting (e.g. for maintenance) by any intervener empowered to do so.

In addition, the recommended routine periodical check program for survey and or tuning of the rig, as determined by the mast/rig manufacturer/provider shall be given.

NOTE The initial verification of the actual tensions induced by a shortening value is made at the first adjustment of a rigging by the mast manufacturer, in particular on any production-built craft and on all craft for which the measurement of tension is difficult without a specific device.

7.2 Design moment M_D: righting or heeling moment

7.2.1 General

For simplification, the calculations and formulas are given for a single mast configuration, but the same principle of assessing the loads on sails and rig may be used for a multiple mast arrangement.

For a single mast arrangement, the design moment M_D is the smaller of the design righting moment M_{RUP} (case a) and the design heeling moment M_{HUP} (case b). This design heeling or righting moment is the moment of the couple made by the two equal and parallel forces, the aerodynamic force F_{Ai} and the hydrodynamic force $F_{Hi} = F_{Ai}$ multiplied by their distance $h_{CETi} + h_{CLR}$,see Figures 1 to 3.

NOTE These cases have been ordered in that way because sailing monohulls are mainly in case a) and are still in greater number than sailing multihulls, usually case b).

The same alternative applies for the main mast of a ketch or yawl rig arrangement; whereas for mizzen mast, it is obvious that its loads need to be assessed according to its respective heeling moment as one cannot reasonably require the whole righting moment of the craft taken by the mizzen mast alone.

For schooner rig, the case is more delicate and shall be assessed according to the sails considered set at the same time, same where there are more than two masts. Subclause 7.2.7.1 defines the sail configurations to be used (as stated by the manufacturer/designer or as proposed in Table 7), these settings shall be included in the owner's manual as per Clause 13.

Wing masts have an area that is considered in this document as a non-reefable sail, see 7.4.

7.2.2 Principle of design

The design moment M_D defined in Table 5 corresponds to the "Design moment" when the craft sails upwind in "normal" conditions. It is the lesser of cases a) and b) below:

— **Case a), the righting moment when sailing upwind governs:** $M_D = M_{RUP}$. This is the case for most monohulls and for "sports" multihulls that may "lift a hull" according to this document: the craft begins to heel significantly before the full wind force and a corresponding heeling moment applies. In "normal" load cases (see Item 4 of Table 3 and Table 7), this design righting moment is the righting moment upwind M_{RUP}, whereas in "Exceptional" load cases or other sail configurations, it can be the maximum righting moment M_{RMAX}. (See Tables 6 and 7.)

© ISO 2020 – All rights reserved
Documents
Document Sharing Hub
Full document details: BS EN ISO 12215-10:2020

— **Case b), the heeling moment when sailing upwind governs,** $M_D = M_{HUP,}$ i.e. the heeling moment when sailing upwind, produced by the resultant force on the sail plan due to the wind. It applies to craft where $M_{RUP} > M_{HUP}$: the righting moment upwind is greater than the heeling moment. This is usually the case for cruising multihulls and for some "form stable" monohulls and/or strongly under canvassed monohulls. This is also usually the case for mizzen masts on ketches or yawls that are not designed to support the whole power of the craft but only their share, according to its sail area. In "normal" load cases (see Item 4 of Table 3 and Table 7), this design moment is the heeling moment upwind M_{HUP} whereas in "Exceptional" load cases or other sail configurations, it can be M_{HDOWN}, M_{BROACH} or M_{RMAX}. (See Tables 6 and 7.)

Unless experience has clearly shown which is the lesser of the righting moment M_{RUP} or the heeling moment M_{HUP}, one shall calculate both to know which one is the lesser. This is particularly true for well canvassed multihulls that “lift a hull” or 'form stable'/under canvassed monohulls.

Table 5 — Formulas for the determination of upwind design moment M_D and forces

$M_D = \min(M_{RUP}; M_{HUP})$ **Design moment and sail forces** The calculations of this Table shall be made at least in the sail configuration S_{C1} or in the sail configuration S_{Ci} of Table 7 inducing the highest moment		
1 - Case a: $M_{RUP} = M_{R\,\phi UP} + M_{RCREW} < M_{HUP}$ **Righting moment upwind governs — Usually monohulls, see Figure 3**		
M_{RUP} is the righting moment at heel angle ϕ_{UP} in m_{LDC} condition, including the maximum effect of asymmetric ballasting (water-ballast, canting keel, foils, etc.), with maximum crew number positioned at deck level height and on the centerline of the craft, in (Nm). **For monohulls**, the heel angle ϕ_{UP} is taken as 30°, and the righting moment at 30° heel is $M_{RUP} = M_{R30} = 9{,}81 \times G_{Z30} \times m_{LDC} + M_{R\,CREW}$ (Nm), see Figure 3 e), where — G_{Z30} (m) is the righting lever at 30° heel, and — $M_{R\,CREW} = 75 \times 9{,}81 \times n_{PH} \times \cos\phi_{UP} \times 0{,}5\,B_H$ is the additional righting moment from hiking crew, where — n_{PH} = number of persons hiking at 75 kg/person in the design category. In the absence of a specific value given by the manufacturer, n_{PH} shall be taken as 60 % of the total crew limit C_L declared in the higher design category. Other people within crew limit staying on the centerline and at deck level. **For multihulls**, see Figures 3 f) and g), the heel angle $\phi_{UP} = \phi_{LIM}$, the angle where the canoe body of the windward hull for catamaran or central hull for trimarans just "takes off" of the heeled flotation, the righting moment is $M_{RUP} = M_{R\phi LIM} = 9{,}81 \times G_{Z\phi LIM} \times m_{LDC} + M_{R\,CREW}$ (Nm), where — $G_{Z\phi LIM} = (0{,}5\,B_{CB}\cos\phi_{LIM} - V_{CG}\sin\Phi_{LIM})$, where — ϕ_{LIM} may be approximated by $\phi_{LIM} = \text{atan}\,(k_\phi \times Tc/B_{CB})$ with $k_\phi = 1{,}7$ for catamarans and $k_\phi = 4$ for trimarans and — V_{CG} is the height of the center of gravity above the bottom of canoe body T_C, which may be taken conservatively at the height of sheerline at mid L_{WL} where not known by a sketch of weight; and — $M_{R\,CREW}$ is as defined for monohulls. NOTE 1 $M_{R\phi LIM}$ is equal to M_{RMAX} where the windward hull or central hull has no buoyant appendage, and close to it in the opposite case.		
Design upwind heel angle ϕ_{UP}, righting moment, wind speed and aerodynamic forces in case a) Unless specifically documented and without using asymmetric ballasting, the default values are		
Craft type	Monohull	Multihull
ϕ_{UP} (degrees)	30°	$\phi_{UP} = \phi_{LIM} = \text{atan}\,(k_\phi \times Tc/B_{CB})$ with $k_\phi = 1{,}7$ for catamarans and 4 for trimarans
M_{RUP} (Nm)	$M_{R\phi\,UP} = M_{R\,30}$ derived from stability curve $+ M_{R\,CREW}$	$M_{R\phi\,UP} = 9{,}81 m_{LDC} \times (0{,}5\,B_{CB}\cos\phi_{LIM} - V_{CG}\sin\phi_{LIM}) + M_{RCREW}$

© ISO 2020 – All rights reserved

Documents
Document Sharing Hub
Full document details: BS EN ISO 12215-10:2020

Table 5 *(continued)*

V_{ACEK} apparent wind speed (knots) at h_{CET1W} (See NOTE 2) V_{ACEM} apparent wind speed (m/s) at h_{CET1W} (See NOTE 2)	$V_{ACEK1} = \sqrt{\frac{M_{RUP}}{0{,}158\ A_{T1}\left(h_{CET1W} + h_{CLR}\right)}}$ wind speed in knots at 30° heel $V_{ACEM1} = \sqrt{\frac{M_{RUP}}{0{,}597\ A_{T1}\left(h_{CET1W} + h_{CLR}\right)}}$ wind speed in m/s at 30° heel	$V_{ACEK1} = \sqrt{\frac{M_{R\phi\ UP}}{0{,}190\ A_{T1}\left(h_{CET1W} + h_{CLR}\right)}}$ wind speed in knots at ϕ_{UP1} $V_{ACEM1} = \sqrt{\frac{M_{R\phi\ UP}}{0{,}720\ A_{T1}\left(h_{CET1W} + h_{CLR}\right)}}$ wind speed in m/s at ϕ_{UP1}
Aerodynamic force (N) for total sail plan perpendicular to sail plan at sail CE	$F_{A30T1} = 0{,}158 \times A_T \times V_{ACEK1}{}^2$ with V (knots) $F_{A30T1} = 0{,}597 \times A_T \times V_{ACEM1}{}^2$ with V (m/s)	$F_{AT1} = 0{,}190 \times A_T \times V_{ACEK1}{}^2$ with V (knots) $F_{AT1} = 0{,}720 \times A_T \times V_{ACEM1}{}^2$ with V (m/s)
2- Case b $M_{RUP} > M_{HUP} = \max(M_{Hi})$ with i = 1 to 5 , see Table 7 **The heeling moment upwind governs — Usually multihulls, see Figure 3** This applies to craft that do not heel significantly i.e. $\phi_{UP1} \leq 20°$		
The input is the apparent wind speed at height h_{CETW1}, V_{ACEM1} (m/s), or V_{ACEk1} (knots), defined in Clause 13 and the respective heights of center of sail area h_{CET1W} and center of hydrodynamic resistance h_{CLR} defined in Table 8 and Figures 1 and 2. The forces perpendicular to each sail can be derived according to its area. The corresponding rig loads can then be derived from Clause 8.		
$A_{Ti} = A_{Mi} + A_{Fi} + A_{WM}$	m²	Total sail area (mainsail + foresail + wing mast) in sail configuration S_{C1}, see Table 7
$F_{AT1b} = 0{,}720 \times A_{T1} \times V_{ACEM1}{}^2$ $F_{AT1b} = 0{,}190 \times A_{T1} \times V_{ACEK1}{}^2$	N	Equal aerodynamic forces at C_E sails and hydrodynamic force at C_{LR} with wind speed V_{ACEM1} in (m/s) or V_{ACEK1} in (knots)
$M_{HUP1} = F_{AT1b} \times (h_{CET1W} + h_{CLR}) + M_{CREW}$	Nm	Heeling moment
$\Phi_H = \Phi_{LIM} \times M_{H1}/M_{RUP1}$	Degree	Heel angle
where		
3- Dimensions in both cases a) and b) replace 1 by i for other sail configurations than S_{C1}.		
A_{M1}, A_{F1}, $A_{WM,}$ and A_{M1} (m²)	are respectively the full mainsail, full upwind foresail, wing mast and total sail area in sail configuration S_{C1};	
V_{MSA1} (m/s) or V_{KNA1} (knots)	is the apparent wind speed for S_{C1} defined below and in 7.1.2 and/or Table 7 for sail configuration $S_{C1,}$ see Figure 3;	
h_{CETW1} (m)	is the height of the application point of the total sail force above W_L, calculated at the height of the center of surface of all sails in sail configuration S_{C1}, plus wing mast, where relevant (see Figures 1 or 2) ;	
h_{CLR} (m)	is the height of the center of underwater lateral resistance force below W_L, taken at mid-draft unless otherwise documented.	

© ISO 2020 – All rights reserved
Documents
Document Sharing Hub
Full document details: BS EN ISO 12215-10:2020

Table 5 *(continued)*

NOTE 2 For index i = 2 to 5, Table 7 considers the same heeling moment as in sail configuration S_{C1}: $M_{Hi} = M_{Hd} = M_{H1}$, which means, for S_{C2} to S_{C5} a greater force F_{Ti}, (but lower center of effort), a greater wind speed and a greater load on the sails and the low working rig elements. NOTE 3 For an upright craft the wind force is $F_A = C_N \times 1/2 \times \rho \times A \times V_{MS}^2$ (N) where C_N = 1,2 is the side force coefficient (close to lift coefficient), ρ = 1,2 kg/m^3 is the density of air at 20 °C, A is the sail area in (m^2), and V_{MS} is the wind speed in (m/s), hence $F_A = 0{,}720 \times A \times V_{MS}^2$ (N) and if the wind speed is in knots the coefficient is 0,720 × (1 852/3 600)^2 = 0,190 and $F_A = 0{,}190 \times A \times V_{KN}^2$ (N). The side for coefficient is taken conservatively at 1,2 for all sails: foresails, mainsails and spinnakers, whereas Reference [5] uses lower and different values for each type of sails. For a craft heeled at ϕ degrees, the horizontal force is $F_A = 0{,}720 \times (\cos \Phi)^{1,3} \times A \times V_{MS}^2$ (N) and for ϕ = 30° $F_{A30°} = 0{,}597 \times A \times V_{MS}^2$ (N) for wind speed in (m/s) and $F_{A30°} = 0{,}158 \times A \times V_{KN}^2$ (N) for wind speed in (knots). The heeled coefficient $(\cos 30°)^{1,3}$, with a power of 1,3, accounts for experimental aspects (velocity gradient, effective angle theory, etc., see Reference [17], and is used in ISO 12217-2:2015.) NOTE 4 The wind heeling moment $M_H\ \phi_{UP1} = 0{,}720 \times (\cos \phi_{UP1})^{1,3} \times A_{T1} \times V_{MS}^2 \times (h_{CETW1} + h_{CLR})$ is multiplied by $(\cos \phi_{UP1})^{1,3}$, which corresponds to a reduction of lift with heel. To simplify and be conservative the cosine is neglected for multihulls for force and heeling moment because $(\cos \phi_{UP1})^{1,3}$ is 0,92 for ϕ_{UP1} = 20° and 0,98 for ϕ_{UP1} = 10°. NOTE 5 The formula generally agreed for wind speed gradient is $V_{R2}/V_{R1} = \ln(h_2/Z_0)/\ln(h_1/Z_0)$ where V_{R2} and V_{R1} are the real wind speed at heights h_2 and h_1, and where z_0 is the ground rugosity (taken 0,000 2 for sea), and ln is the "natural" logarithm (Napierian).This formula may be used to derive the variation of true wind speed between CE of sails and anemometer position, or, with a small error, for the variation of apparent wind speed.
CAUTION — The wind speed V_{A1} is the design apparent wind speed, i.e. the actual apparent wind speed when the sail plan begins to be reduced. This wind speed is the one exerted at sail CE, which is smaller than the speed measured with an anemometer at mast top (see NOTE 5). Wind gusts can multiply this wind speed by 1,4 and therefore double the wind force.

7.2.3 Topics on multihulls/form stable sailing craft corresponding to case b) i.e. with $M_{H1} < M_{R\ UP1}$

In case b), the heeling moment is lower than the righting moment, sometimes down to $M_{H1} < 0{,}5\ M_{R\ UP1}$ particularly for large yachts. This means that the mast and rig can be damaged or break under severe gusts where the craft is over-canvassed. Devices limiting the heeling moment e.g. "fuse" or devices limiting loads in the mainsail sheet, overload alarm on sheets/shrouds, electric winches, or rams are recommended for that purpose.

When the wind - real and apparent - increases, the sail setting (sail reduction by reefing/rolling, incidence of the sails against apparent wind, pull on the sheets) is adjusted and/or reefed/reduced. This document considers that the sail area/setting, and sheet trimming, are adjusted for each sail reduction to reach $M_{HD1,}$ the heeling moment at which the sail area is first reduced upwind (S_{C1} in Table 7). Some designers consider that the design heeling moment increases when the sail area is reduced, and they may use their own values. For dimensions, areas, etc. Table 8 shall be used unless specific values are available and documented.

CAUTION — When using different values than in Table 7, it is the responsibility of the builder/designer to define the apparent wind speed for these limits, whether leading to a heeling moment greater or smaller than the default proposed value (see 7.1.2), according to the way the craft is designed to be used, and to give in the owner's manual information about the sails to be set and how they should be trimmed, see Clause 13.

NOTE To simplify the calculations, the formulas of this document do not take into account the windage of hull, rig and superstructure, unlike in the method proposed in Annex G of ISO 12217-2:2015. This stability standard requires to supply information concerning maximum apparent wind speed to be given in the owner's manual according either to tests or to calculations, both in minimum operating m_{MO} condition and, voluntarily, in maximum load condition m_{LDC}. The apparent wind speeds used in this document have the same purpose as the ones given in ISO 12217-2:2015, but are mainly connected to mast/rig strength issues in m_{LDC} condition, so the results may differ.

© ISO 2020 – All rights reserved

Documents
Document Sharing Hub
Full document details: BS EN ISO 12215-10:2020

7.2.4 Downwind longitudinal force F_{ADOWN} and nose trimming moment M_{HDOWN}, running under spinnaker alone — "Normal" (S_{c6}) or "exceptional" (S_{c8})

The longitudinal force F_{ADOWN} and corresponding nose-trimming moment M_{HDOWN}, exerted when running downwind under spinnaker alone at mast top or hounds, are defined in Table 6, the worst case being retained. The apparent wind speed V_{A6} is defined in Table 7. This force needs not be taken greater than the force corresponding to a nose trim angle of 10°.

7.2.5 Maximum righting moment M_{RMAX}, exceptional case, reaching under spinnaker

M_{RMAX}, which may be approximated by $M_{R\phi LIM}$ for multihulls, is the maximum righting moment in m_{LDC} condition calculated from the stability curve or measured. This case is exceptional as it only happens in some severe gust conditions in upwind sailing, or under lateral broaching under spinnaker. Dynamic and fatigue loadings are not considered to be relevant in this load case.

7.2.6 Heeling force $F_{ABROACH}$ and heeling moment $M_{HBROACH}$ while broaching under spinnaker, exceptional case

$F_{ABROACH}$ and $M_{HBROACH}$, defined in Table 6, are respectively the transverse force and corresponding heeling moment induced by the rig in S_{C9} to consider the rather rare case where the craft broaches under spinnaker, i.e. the craft gets out of balance and is heeled significantly. As for the upwind moment, it shall be compared to M_{RMAX}, the smaller value being retained.

Table 6 — Formulas for downwind design moments and forces

1 - Downwind longitudinal force and trimming moment (see Table 7)
$F_{ADOWN} = 0{,}720 \times A_6 \times V_{MSA6}^2$ (N) $= 0{,}190 \times A_6 \times V_{KNA6}^2$ (N) is the longitudinal force exerted under spinnaker, in sail configuration S_{c6} with the corresponding apparent wind speed expressed respectively in (m/s) or (knots), and $M_{HDOWN} = F_{ADOWN} \times h_{CET6W}$ (Nm) is the design heeling moment for "Normal" sail configuration S_{c6}. A_6 and h_{CET6W} being respectively the sail area and height of sails center of effort above W_L in sail configuration S_{c6}, see Table 7 and Figures 1 and 2.
2 - Heeling force and moment while broaching under spinnaker (see Table 7)
$F_{ABROACH} = 0{,}720 \times A_9 \times V_{MSA9}^2$ (N) $= 0{,}190 \times A_9 \times V_{KNA9}^2$ (N)transverse force exerted when broaching under spinnaker in sail configuration S_{c9} with the corresponding apparent wind speed expressed in (m/s) or (knots), and $M_{HBROACH} = F_{ABROACH} \times (h_{CET9W} + h_{CLR})$ (Nm) is the heeling moment for "Exceptional" sail configuration S_{c9}.
NOTE In M_{MDOWN}, the lever of the sail force is considered above W_L and not C_{LR}, as it is considered that the appendages do not play a significant part in this load case.

7.2.7 Minimum sail configuration and righting/heeling moment to be analyzed

7.2.7.1 General

The main relevant sail configurations with corresponding design heeling/righting moments and corresponding wind speed shall be analyzed. See 7.1.2 for more information.

7.2.7.2 Default proposed values

Table 7 proposes default values for sail configurations to be analyzed and the corresponding wind speed. This table is applicable to craft whether M_{HUP} or M_{RUP} govern. For Normal/Exceptional sail configurations, the factor k_{LC} shall correspond to the relevant value of Table 3.

© ISO 2020 – All rights reserved
Documents
Document Sharing Hub
Full document details: BS EN ISO 12215-10:2020

Table 7 — Sail configurations and corresponding design heeling moment in m_{LDC} condition

S_C	Sail configuration	Design heeling/ righting moment (Nm)	Default apparent wind speed value at CE of sails V_{ACEKi} or V_{ACEMi}[c] (knots) or (m/s)
1 - Sail configuration for "normal" values of k_{LC} of Table 3., according to load case			
1	Full mainsail + full foresail (Genoa or Solent as relevant)	Case a $M_{D1} = M_{RUP1}$	NOTE In case a, the apparent wind speed is informative as M_{RUP1} governs $V_{ACEK1a} = \sqrt{\frac{M_{RUP1}}{0,158\ A_{T1}\ (h_{CET1W} + h_{CLR})}}$ (knots) $V_{ACEM1a} = 0,514\ V_{ACEK1a}$ (m/s)
		Case b $M_{D1} = M_{HUP1}$	$V_{ACEK1b} = 22 + 1,9 L_{WL}^{0,5}$ (knots) $V_{ACEM1b} = 0,514\ V_{ACEK1b}$ (m/s)
2	Full mainsail + solent jib i.e. 100 % fore triangle	Case a $M_{Di} \geq M_{RUP1}$ Case b $M_{Di} \geq M_{HUP1}$	V_{Aia} calculated to induce at least M_{RUP1} V_{Aib} calculated to induce at least M_{HUP1}
3	Mainsail 1 reef (default 83 % P) + solent jib or 100 % fore triangle whichever is lower		
4	Mainsail fully reefed to 50 % P[a] + foresail reduced to 25 % of fore triangle[b]		
5	Mainsail fully reefed to 50 % P[a] alone		
6	General running case with spinnaker at mast top or hounds where relevant, plus full mainsail. Worst case chosen. It also includes the case where there is no fixed/running backstay	M_{HDOWN}	$V_{ACEK6b} = 25 - 1,7 L_{WL}^{0,5}$ (knots) $V_{ACEM\ 6b} = 0,514\ V_{ACEK\ 6b}$ (m/s)
7	Any other relevant sail configuration, for specific rig type	According to case	According to case
2 - Sail configuration for "exceptional" values of k_{LC} in Table 3 according to load case			
8	Same as S_{c6} gybing before tightening running backstay or removable backstay	M_{HDOWN}	$V_{ACEK\ 8b} = 25 - 1,7\ L_{WL}^{0,5}$ (knots) $V_{ACEM\ 8b} = 0,514\ V_{ACEK\ 8b}$ (m/s)
9	Broaching under full mainsail + spinnaker (head or mast top, where relevant) at 90° from apparent wind	Min (M_{RMAX}; $M_{HBROACH}$)	$V_{ACEK\ 9b} = 18 + 1,7\ L_{WL}^{0,5}$ (knots) $V_{ACEM\ 9b} = 0,514\ V_{KNSA9b}$ (m/s)
10	Any other relevant sail configuration, for specific rig type	According to case	According to case

[a] Mainsail reduced to 50 % means luff 0,707 P (and tack close to 0,707 E according to sail shape).

[b] Foresail reduced to 25 % of fore triangle depends from the type of reefing (furling /slab) or setting a smaller jib.

[c] See NOTE 5 in Table 5 for corresponding apparent wind speed at anemometer height.

CAUTION — The wind speed V_{A1} is the design apparent wind speed. The true wind speed when the sail plan begins to be reduced is smaller when sailing upwind (see CAUTION at the bottom of Table 5).

7.3 Rig dimensions, and default values for areas, forces and points of application

Table 8, Figure 1 (monohulls) and Figure 2 (multihulls) give the rig dimensions and default values for areas, forces and points of application of most frequent rig arrangements. These "default" values shall be used unless specific documented values are available. For other rig configurations, the same logic shall be applied to calculate areas and their center of area.

© ISO 2020 – All rights reserved

Documents
Document Sharing Hub
Full document details: BS EN ISO 12215-10:2020

Table 8 — Rig dimensions and default values for areas, and points of application

Name	Definition[a]	Default value
A_{F1}	Area of max foresail in sail configuration $S_{C1.}$ With L_P between 0,9 for solent and 1,3 to 1,5 for genoa	$A_{F1} = 0{,}85\ L_P \times J \times (I^2 + J^2)^{0,5}$
A_{F2}	Area of solent or 100 % foretriangle whichever is smaller	$A_{F2} = 0{,}5\ I \times J$ or A_{Solent}
A_{Mi}	Area of mainsail in S_{ci} with $P_1 = P$ for full mainsail	$A_{Mi} = 0{,}5\ P_i \times E_i \times k_{ROACH}$
A_{SP1}	Area of symmetric spinnaker 1 (hounds)	$A_{SP1} = 1{,}56\ I_{SP1} \times J$
A_{SP2}	Area of symmetric spinnaker 2 (mast top)	$A_{SPI2} = 1{,}56\ I_{SP2} \times J$
A_{WM}	Area of wing mast, where W_{WM} is the wing mast mean chord	$A_{WM} = (P+B_{AS}) \times W_{wm}$
A_{T1}	Total area in sail configuration S_{ci}	$A_{Ti} = A_{Mi} + A_{Fi} + A_{WM}$
B_{AS}	Height of boom above H_{BI}	B_{AS}
E	Length of mainsail luff along the boom	E
E_s	Horizontal distance of the mainsheet pull aft of front of E	E_s
F_{Ai}	Aerodynamic force in sail configuration S_{ci}	$F_A = 0{,}720 \times A \times V_{MS}^2$ (N) $F_A = 0{,}190 \times A \times V_{KN}^2$ (N) where V_{MS} and V_{KN} is the apparent wind speed in (m/s) and (knots)
h_{CEMi}	Height of center of mainsail area above W_L in S_{Ci} configuration	$h_{CEMi} = P_i \times k_{HM} + H_{BI} + B_{AS}$
h_{CEFi}	Height of center of foresail area above W_L (see Table 7, for k_{HF}) in S_{Ci}	$h_{CEFi} = k_{HF} \times I + H_{BI}$
h_{CETi}	Height of center of total sail plan above W_L in S_{Ci} configuration	$h_{CETi} = (A_{Fi} \times h_{CEFi} + A_{Mi} \times h_{CEMi} + A_{WM} \times h_{CEWM})/A_{Ti}$
h_{CEWM}	Height of center of wing mast above W_L in S_{Ci} configuration	$h_{CEWM} = k_{HWM} \times (P + B_{AS})$
h_{CLR}	Default height of center of lateral resistance below W_L unless otherwise documented	$h_{CLR} = 0{,}5\ T$
H_{BI}	Height of hull/deck connection above W_L at front of mast section in m_{LDC} condition	H_{BI}
I	Height above H_{BI} of hounds (intersection between mast and forestay)	I
I_{SP1}	Height above H_{BI} of spinnaker hoist at hounds	$I_{SP1} \approx I$
I_{SP2}	Height above H_{BI} of spinnaker hoist at top of fractional mast	$P + B_{AS}$
J	Longitudinal distance between mast front and intersection between main forestay and deck	J
k_{DSR}	Dynamic load factor; see Table 10, for definition	$k_{DSR} = \max(3{,}086 \times L_{WL}^2/m_{LDC}^{0,66};1)$
k_{HWM}	Ratio between h of center of area of wing masts/total height	$k_{HWM} = [h_{CEWM}/(P + B_{AS})] \approx 0{,}5$
k_{ROACH}	Ratio between projected mainsail area and $0{,}5 \times P \times E$, varies between 1 for triangular mainsail up to 1,5 + for modern gaff rig.	$k_{ROACH} = A_M/(0{,}5 \times P \times E)$
L_{ASH}	Horizontal aft foot of shroud	L_{ASH}
L_{BS}	Horizontal aft foot of backstay aft of front of mast at H_{BI} level	L_{BS}
L_{RBS}	Horizontal aft foot of running backstay at H_{BI} level aft of front of mast	L_{RBS}
L_P	Distance of sheeting point of foresail perpendicular to forestay	L_P
P	Height of top of mainsail above boom (P_1 for full mainsail)	P
Pi	Height of top of mainsail above boom in sail configuration Sci	Pi
α_{BS}	Aft angle of backstay connected to mast at top of I level	$\alpha_{BS} = [L_{BS}/(P + B_{AS})]$
α_{BRB}	Aft angle of running backstay connected to mast at top of I level	$\alpha_{RBS} = [L_{RBS}/(P + B_{AS})]$
α_{FS}	Angle of forestay against vertical	$\alpha_{FS} = [J/(I + H_{BI})]$

[a] Index i means sail configuration S_{ci}.

© ISO 2020 – All rights reserved
Documents
Document Sharing Hub
Full document details: BS EN ISO 12215-10:2020

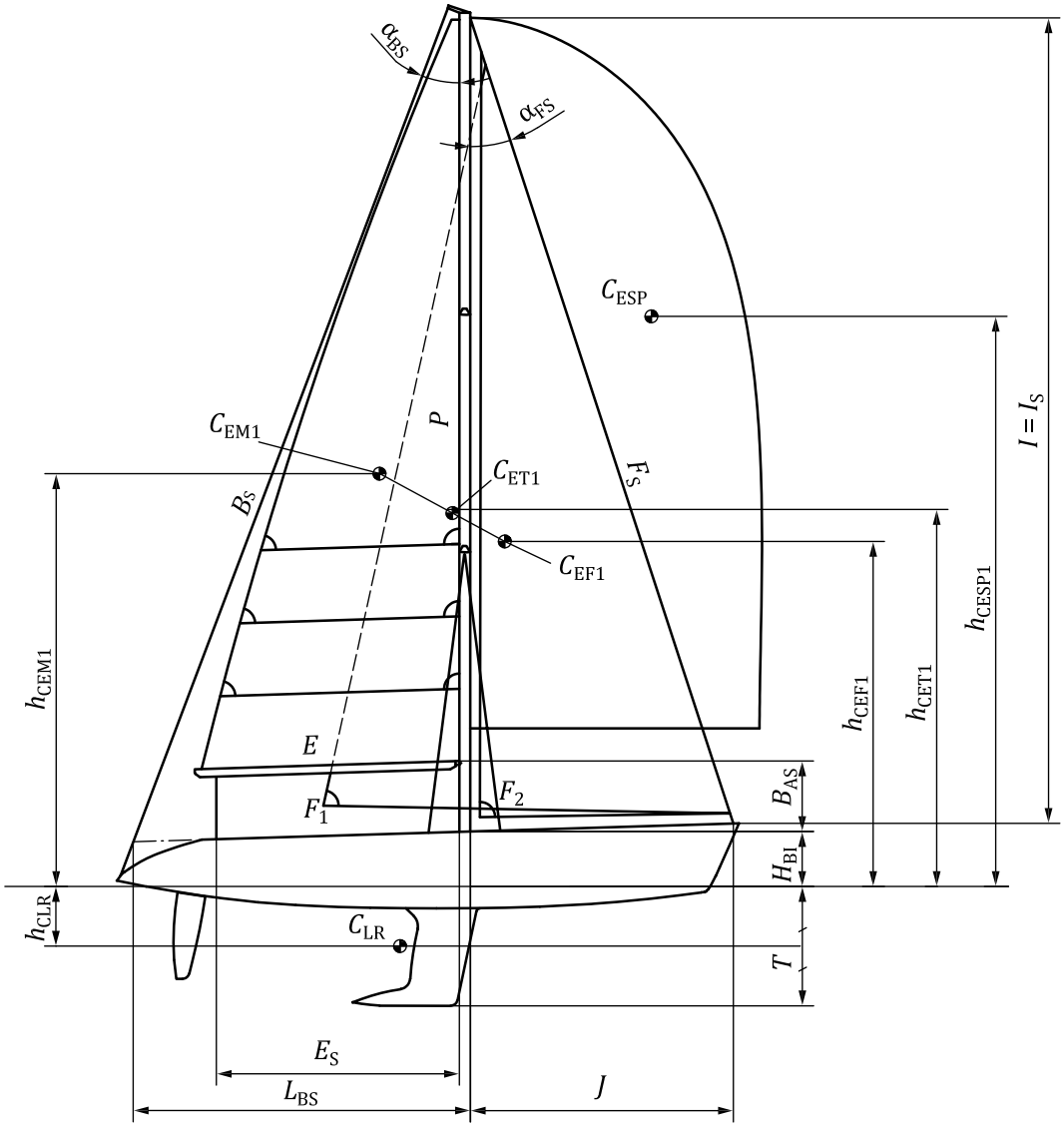

a) Fore and aft lower shrouds and backstay

© ISO 2020 – All rights reserved

Documents
Document Sharing Hub
Full document details: BS EN ISO 12215-10:2020

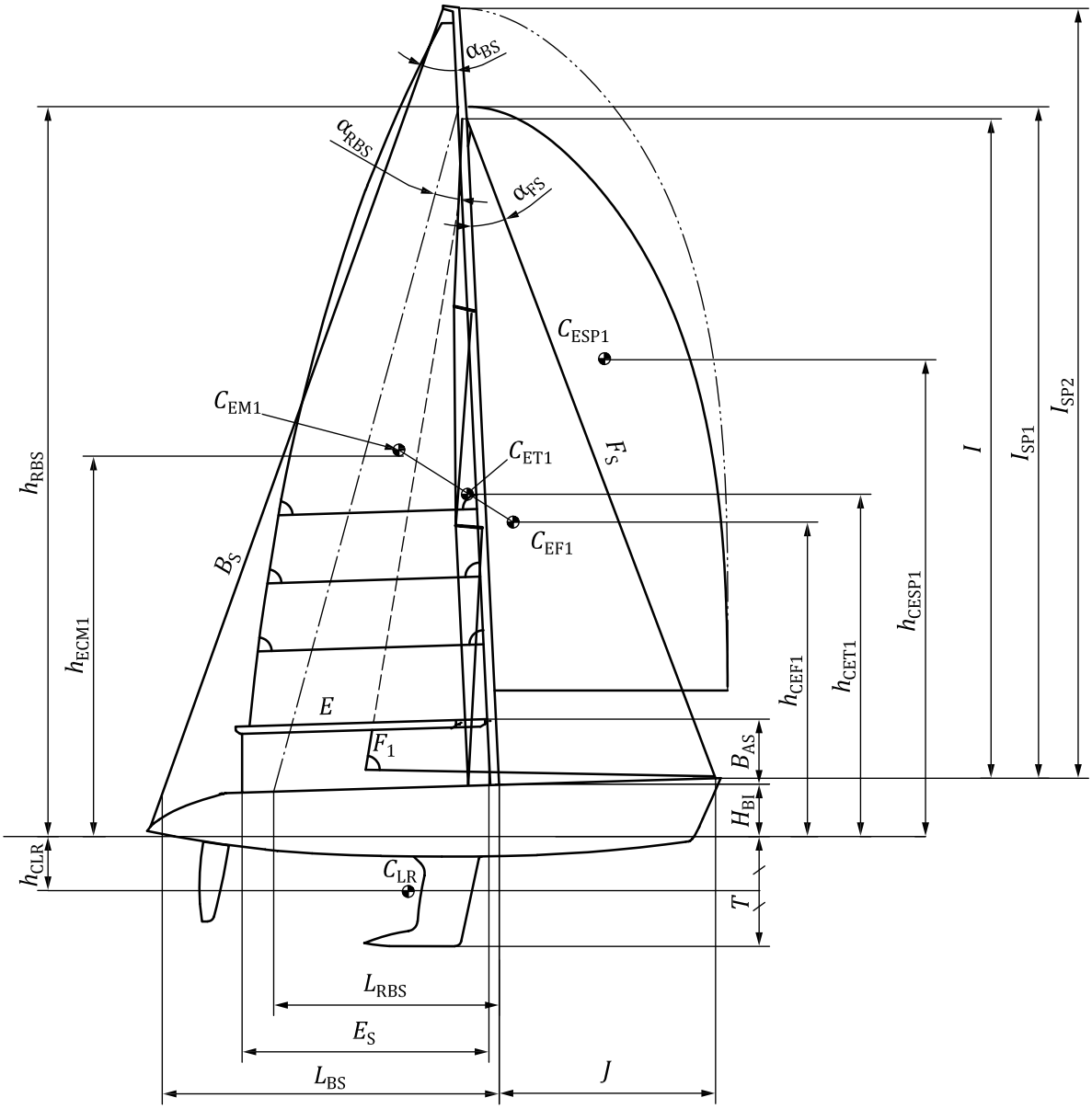

b) Fractional rig, with aft angled spreaders, fixed and running backstays

All values defined in Table 8.

Figure 1 — Typical longitudinal rig (stays) arrangements for monohulls

© ISO 2020 – All rights reserved

Documents
Document Sharing Hub
Full document details: BS EN ISO 12215-10:2020

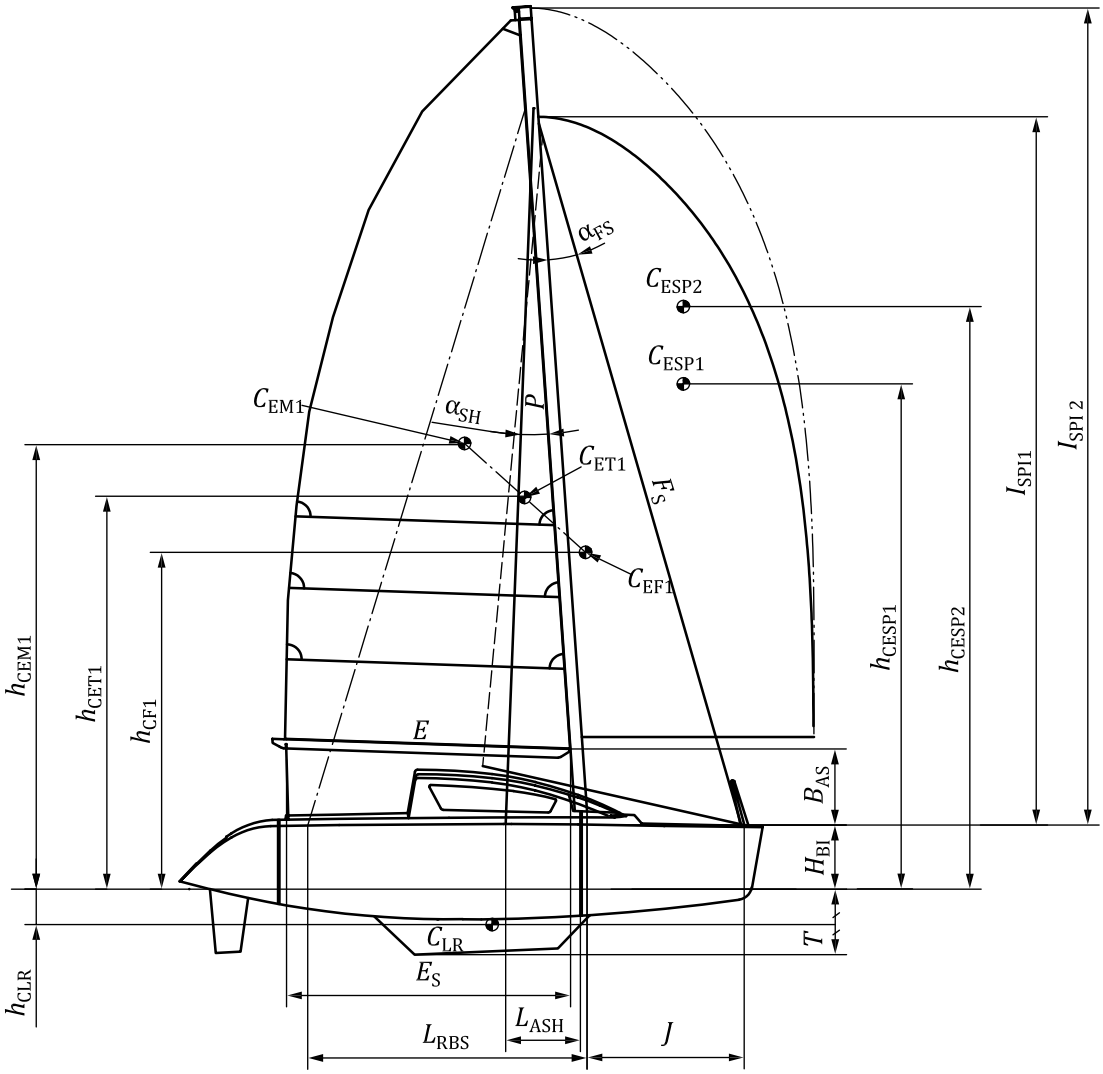

All values defined in Table 8.

Figure 2 — Typical longitudinal rig (stays) arrangements for multihulls

© ISO 2020 – All rights reserved

Documents
Document Sharing Hub
Full document details: BS EN ISO 12215-10:2020