BS EN ISO 12215-7:2020

BSI Standards Publication

Small craft - Hull construction and scantlings

Part 7: Determination of loads for multihulls and of their local scantlings using ISO 12215-5

Documents
Document Sharing Hub

Full document details: BS EN ISO 12215-7:2020

National foreword

This British Standard is the UK implementation of EN ISO 12215-7:2020. It is identical to ISO 12215-7:2020.

The UK participation in its preparation was entrusted to Technical Committee GME/33, Small craft.

A list of organizations represented on this committee can be obtained on request to its committee manager.

This publication does not purport to include all the necessary provisions of a contract. Users are responsible for its correct application.

© The British Standards Institution 2020
Published by BSI Standards Limited 2020

ISBN 978 0 580 51523 1

ICS 47.080

Compliance with a British Standard cannot confer immunity from legal obligations.

This British Standard was published under the authority of the Standards Policy and Strategy Committee on 30 November 2020.

Amendments/corrigenda issued since publication

Date	Text affected

Documents
Document Sharing Hub

Full document details: BS EN ISO 12215-7:2020

EUROPEAN STANDARD

NORME EUROPÉENNE

EUROPÄISCHE NORM

EN ISO 12215-7

November 2020

ICS 47.080

English Version

Small craft - Hull construction and scantlings - Part 7: Determination of loads for multihulls and of their local scantlings using ISO 12215-5 (ISO 12215-7:2020)

Petits navires - Construction de la coque et échantillonnage - Partie 7: Détermination des charges des multicoques et de leur échantillonnage local en utilisant l'ISO 12215-5 (ISO 12215-7:2020)

Kleine Wasserfahrzeuge - Rumpfbauweise und Dimensionierung - Teil 7: Bestimmung der Lasten für Mehrrumpffahrzeuge und ihrer lokalen Dimensionierungen unter Anwendung der ISO 12215-5 (ISO 12215-7:2020)

This European Standard was approved by CEN on 20 July 2019.

CEN members are bound to comply with the CEN/CENELEC Internal Regulations which stipulate the conditions for giving this European Standard the status of a national standard without any alteration. Up-to-date lists and bibliographical references concerning such national standards may be obtained on application to the CEN-CENELEC Management Centre or to any CEN member.

This European Standard exists in three official versions (English, French, German). A version in any other language made by translation under the responsibility of a CEN member into its own language and notified to the CEN-CENELEC Management Centre has the same status as the official versions.

CEN members are the national standards bodies of Austria, Belgium, Bulgaria, Croatia, Cyprus, Czech Republic, Denmark, Estonia, Finland, France, Germany, Greece, Hungary, Iceland, Ireland, Italy, Latvia, Lithuania, Luxembourg, Malta, Netherlands, Norway, Poland, Portugal, Republic of North Macedonia, Romania, Serbia, Slovakia, Slovenia, Spain, Sweden, Switzerland, Turkey and United Kingdom.

EUROPEAN COMMITTEE FOR STANDARDIZATION
COMITÉ EUROPÉEN DE NORMALISATION
EUROPÄISCHES KOMITEE FÜR NORMUNG

CEN-CENELEC Management Centre: Rue de la Science 23, B-1040 Brussels

© 2020 CEN All rights of exploitation in any form and by any means reserved worldwide for CEN national Members.

Ref. No. EN ISO 12215-7:2020 E

Documents
Document Sharing Hub

Full document details: BS EN ISO 12215-7:2020

European foreword

This document (EN ISO 12215-7:2020) has been prepared by Technical Committee ISO/TC 188 "Small craft" in collaboration with CCMC.

This European Standard shall be given the status of a national standard, either by publication of an identical text or by endorsement, at the latest by May 2021, and conflicting national standards shall be withdrawn at the latest by May 2021.

Attention is drawn to the possibility that some of the elements of this document may be the subject of patent rights. CEN shall not be held responsible for identifying any or all such patent rights.

This document has been prepared under a mandate given to CEN by the European Commission and the European Free Trade Association.

According to the CEN-CENELEC Internal Regulations, the national standards organizations of the following countries are bound to implement this European Standard: Austria, Belgium, Bulgaria, Croatia, Cyprus, Czech Republic, Denmark, Estonia, Finland, France, Germany, Greece, Hungary, Iceland, Ireland, Italy, Latvia, Lithuania, Luxembourg, Malta, Netherlands, Norway, Poland, Portugal, Republic of North Macedonia, Romania, Serbia, Slovakia, Slovenia, Spain, Sweden, Switzerland, Turkey and the United Kingdom.

Endorsement notice

The text of ISO 12215-7:2020 has been approved by CEN as EN ISO 12215-7:2020 without any modification.

Documents
Document Sharing Hub

Full document details: BS EN ISO 12215-7:2020

Contents

Page

Foreword ..... **v**
Introduction ..... **vi**
1 Scope **1**
2 Normative references **1**
3 Terms and definitions **2**
4 Symbols **4**
5 Application of this document **6**
5.1 Materials 6
5.2 Limitations 6
5.3 Overall procedure for the application of this document 7
6 Main dimensions, data and areas **7**
6.1 Dimensions and data 7
6.1.1 General 7
6.1.2 Bottom deadrise of the hulls βx and chine beam B_Cx of planing multihulls 7
6.1.3 Wet deck bottom 8
6.1.4 Crossbeams 8
6.2 Areas 11
7 Dimensions and pressure for panels and stiffeners under local loads **14**
7.1 General 14
7.2 Example of application on multihulls 14
7.2.1 Sections 14
7.2.2 Details on panel assessment and dimensions 16
7.2.3 The constant averaged pressure method 16
7.2.4 Other assessment and dimensioning methods 17
7.2.5 Panels acting as "natural" stiffeners 17
7.3 Other topics on panel or stiffener dimensions 17
8 Local pressure-adjusting factors **17**
9 Local design pressures **24**
9.1 General 24
9.2 Limits of areas 24
9.3 Tables defining the local design pressures for multihulls 24
9.4 Design pressure for trimaran floats P_{TRFx} 27
9.4.1 Pressure reduction factors 27
9.4.2 Pressure 27
9.5 Design pressure on watertight bulkheads and integral tanks 27
10 Further treatment of structural elements subject to local loads **27**
11 Assessment of multihulls rudders, appendages and their wells **28**
12 Multihull global loads **28**
12.1 General 28
12.2 Typical structural arrangements 28
12.3 Global load assessment 30
12.3.1 General 30
12.3.2 The simplified method 30
12.3.3 The enhanced method 31
12.4 Design stresses under global loads 32
12.5 Global load case GLC1: Diagonal load in quartering sea 32
12.6 Global load case GLC 2: Rig loads 33
12.7 Combination of diagonal load GLC 1 and rig load GLC 2 for sailing multihulls 33
12.8 Global load case GLC 3: Asymmetric broaching loads in sailing multihulls 33

AVA Documents
Document Sharing Hub

© ISO 2020 – All rights reserved

Full document details: BS EN ISO 12215-7:2020

12.9 Global load case GLC 4: Longitudinal broaching/pitchpoling ... 34
12.9.1 General ... 34
12.9.2 Full method of analysis of the buoyancy load when the craft pitchpoles ... 35
12.10 Global load case GLC 5: Longitudinal force on one hull ... 36
12.10.1 General ... 36
12.10.2 Longitudinal force ... 36
12.11 Global load case GLC 6: Bending of crossbeams connecting hulls for motor catamarans ... 37

13 Structural arrangement for supporting global loads ... 38

14 Multihulls used as commercial craft and workboats ... 38

15 Information to be included in the owner's manual ... 38
15.1 General ... 38
15.2 Respect of maximum loaded displacement ... 38
15.3 Operational guidance ... 38
15.4 Information to take care of sandwich plating ... 38
15.5 Information required by Annex J of ISO 12215-5:2019 - for commercial craft and workboat ... 38

Annex A (informative) **Application sheet of ISO 12215-7 ... 39**

Annex B (informative) **"Established practice" recommendations for global loads assessment using FEM methods and reporting ... 41**

Annex C (informative) **"Established practice" details ... 43**

Annex D (informative) **Technical background and example of torsional moment analysis with differential deflection of crossbeams ... 51**

Bibliography ... 58

© ISO 2020 – All rights reserved

Documents
Document Sharing Hub
Full document details: BS EN ISO 12215-7:2020

Foreword

ISO (the International Organization for Standardization) is a worldwide federation of national standards bodies (ISO member bodies). The work of preparing International Standards is normally carried out through ISO technical committees. Each member body interested in a subject for which a technical committee has been established has the right to be represented on that committee. International organizations, governmental and non-governmental, in liaison with ISO, also take part in the work. ISO collaborates closely with the International Electrotechnical Commission (IEC) on all matters of electrotechnical standardization.

The procedures used to develop this document and those intended for its further maintenance are described in the ISO/IEC Directives, Part 1. In particular the different approval criteria needed for the different types of ISO documents should be noted. This document was drafted in accordance with the editorial rules of the ISO/IEC Directives, Part 2 (see www.iso.org/directives).

Attention is drawn to the possibility that some of the elements of this document may be the subject of patent rights. ISO shall not be held responsible for identifying any or all such patent rights. Details of any patent rights identified during the development of the document will be in the Introduction and/or on the ISO list of patent declarations received (see www.iso.org/patents).

Any trade name used in this document is information given for the convenience of users and does not constitute an endorsement.

For an explanation of the voluntary nature of standards, the meaning of ISO specific terms and expressions related to conformity assessment, as well as information about ISO's adherence to the World Trade Organization (WTO) principles in the Technical Barriers to Trade (TBT), see www.iso.org/iso/foreword.html.

This document was prepared by Technical Committee ISO/TC 188, *Small craft*.

A list of all parts in the ISO 12215 series can be found on the ISO website.

Any feedback or questions on this document should be directed to the user's national standards body. A complete listing of these bodies can be found at www.iso.org/members.html.

© ISO 2020 – All rights reserved

Documents
Document Sharing Hub
Full document details: BS EN ISO 12215-7:2020

Introduction

The reason underlying the preparation of this document is that standards and recommended practices for loads on the hull and the dimensioning of small craft differ considerably, thus limiting the general worldwide acceptability of boat scantlings. This document has been set towards the minimal requirements of the current practice.

The dimensioning according to this document is regarded as reflecting current practice, provided the craft is correctly handled in the sense of good seamanship and operated at a speed appropriate to the prevailing sea state in a safe and responsible manner, having due cognisance of the prevailing conditions.

Implementation of this document allows to achieve an overall structural strength that ensures the watertight and weathertight integrity of the craft. This document is intended to be a tool to determine the scantlings of a craft as per minimal requirements. It is not intended to be a structural design procedure.

The mechanical property data supplied as default values in this document make no explicit allowance for deterioration in service nor provide any guarantee that these values can be obtained for any particular craft.

Like the other parts of ISO 12215, this document was developed to assess the structure of recreational craft up to 24 m L_H, but it can also be used, where relevant, for non-recreational craft, workboats or yachts with an IMO load line length of up to 24 m, with the necessary critical mind.

© ISO 2020 – All rights reserved
Documents
Document Sharing Hub
Full document details: BS EN ISO 12215-7:2020

Small craft — Hull construction and scantlings —

Part 7: Determination of loads for multihulls and of their local scantlings using ISO 12215-5

1 Scope

This document defines the dimensions, local design pressures and global loads acting on multihull craft with a hull length (L_H) or load line length of up to 24 m (see Note). It considers all parts of the craft that are assumed watertight or weathertight when assessing stability, freeboard and buoyancy in accordance with ISO 12217 (all parts). Scantlings corresponding to the local design pressures are then assessed using ISO 12215-5.

NOTE The load line length is defined in the OMI "International Load Lines Convention 1966/2005", it can be smaller than L_H for craft with overhangs. This length also sets up at 24 m the lower limit of several IMO conventions.

This document is applicable to multihulls built from the same materials as in ISO 12215-5, in intact condition, and of the two following types:

— recreational craft, including recreational charter vessels;

— commercial craft and workboats.

It is not applicable to multihull racing craft designed only for professional racing.

This document is applicable to the structures supporting windows, portlights, hatches, deadlights and doors.

For the complete scantlings of the craft, this document is intended to be used in conjunction with ISO 12215-8 for rudders, ISO 12215-9 for appendages of sailing craft and ISO 12215-10 for rig loads and rig attachment in sailing craft. ISO 12215-6 can be used for additional details.

Throughout this document, unless otherwise specified, dimensions are in (m), areas in (m^2), masses in (kg), forces in (N), moments in (Nm), Pressures in (kN/m^2) (1 kN/m^2 = 1 kPa), stresses and elastic modulus in (N/mm^2) (1 N/mm^2 = 1 MPa).

2 Normative references

The following documents are referred to in the text in such a way that some or all of their content constitutes requirements of this document. For dated references, only the edition cited applies. For undated references, the latest edition of the referenced document (including any amendments) applies.

ISO 8666:2020, *Small craft — Principal data*

ISO 12215-5:2019, *Small craft — Hull construction and scantlings — Part 5: Design pressures for monohulls, design stress, scantlings determination*

ISO 12215-8:2009, *Small craft — Hull construction and scantlings — Part 8: Rudders*

ISO 12215-9:2012, *Small craft — Hull construction and scantlings — Part 9: Sailing craft appendages*

ISO 12215-10:2020, *Small craft — Hull construction and scantlings — Part 10: Rig loads and rig attachments in sailing craft*

© ISO 2020 – All rights reserved

Documents
Document Sharing Hub
Full document details: BS EN ISO 12215-7:2020

ISO 12217-1:2015, *Small craft — Stability and buoyancy assessment and categorization — Part 1: Non-sailing boats of hull length greater than or equal to 6 m*

ISO 12217-2:2015, *Small craft — Stability and buoyancy assessment and categorization — Part 2: Sailing boats of hull length greater than or equal to 6 m*

ISO 12217-3:2015, *Small craft — Stability and buoyancy assessment and categorization — Part 3: Boats of hull length less than 6 m*

3 Terms and definitions

For the purposes of this document, the following terms and definitions apply.

ISO and IEC maintain terminological databases for use in standardization at the following addresses:

— ISO Online browsing platform: available at https://www.iso.org/obp

— IEC Electropedia: available at http://www.electropedia.org/

3.1
multihull
craft with two or more hulls with a connecting *wet deck* (3.8)/crossbeams above the loaded waterline, as opposed to a tunnel boat or scow

Note 1 to entry: See Clause 6 and Figure 2 for the main dimensions of a multihull.

3.2
design categories
description of the sea and wind conditions for which a craft is assessed to be suitable

Note 1 to entry: The design categories are defined in ISO 12217 (all parts).

Note 2 to entry: The definitions of the design categories are in line with the European Recreational Craft Directive 2013/53/EU.

[SOURCE: ISO 12215-5:2019, 3.1.]

3.3
loaded displacement
m_{LDC}
mass of water displaced by the craft, including all appendages, when in fully loaded ready for use condition

Note 1 to entry: The fully loaded ready for use condition is further defined in ISO 8666.

[SOURCE: ISO 12215-5:2019, 3.2.]

3.4
mass in minimum operating conditions
m_{OC}
mass of the craft in minimum operating condition

Note 1 to entry: The minimum operating condition is further defined in ISO 8666.

3.5
sailing craft
craft for which the primary means of propulsion is wind power

Note 1 to entry: It is further defined in ISO 8666.

Note 2 to entry: In this document, non-sailing craft are considered as motor craft.

© ISO 2020 – All rights reserved
Documents
Document Sharing Hub
Full document details: BS EN ISO 12215-7:2020

[SOURCE: ISO 12215-5:2019, 3.3.]

3.6
beam of hull
B_H
beam across the outer hulls

Note 1 to entry: The measurement of the beam of hulls is specified in ISO 8666.

3.7
chine beam
B_C
beam at chine of planing hulls

Note 1 to entry: It is further characterized in 6.1.2.

3.8
wet deck
underside area of the structure connecting hulls with an area greater than 5 % $L_H B_H$

Note 1 to entry: Some *multihulls* (3.1) have no wet deck but just crossbeams. i.e. connecting beams.

3.9
craft speed
V
for motor craft, maximum speed in calm water and m_{LDC} condition that is declared by the manufacturer, expressed in knots

[SOURCE: ISO 12215-5:2019, 3.6.]

3.10
displacement craft
motor craft whose speed is such that $V < 5\sqrt{L_{WL}}$

[SOURCE: ISO 12215-5:2019, 3.7, modified - the definition is reworded.]

3.11
displacement mode
mode of running of a motor craft in the sea such that its mass is mainly supported by buoyancy forces

Note 1 to entry: This is the case where the actual speed in a seaway in m_{LDC} condition is such that its speed/length ratio makes the craft behave as a *displacement craft* (3.10).

[SOURCE: ISO 12215-5:2019, 3.8, modified - in the definition, "craft" is replaced with "motor craft".]

3.12
planing craft
motor craft whose speed is such that $V \geq 5\sqrt{L_{WL}}$

Note 1 to entry: This speed/length ratio limit has been arbitrarily set up in this document, but it can vary from one craft to another according to hull shape and other parameters.

[SOURCE: ISO 12215-5:2019, 3.9, modified - the definition is reworded.]

3.13
planing mode
mode of running of a motor craft in the sea such that a significantly part of its mass is supported by forces coming from dynamic lift due to speed in the water

Note 1 to entry: A *planing craft* (3.12) in calm water runs in planing mode, but it can be obliged to significantly reduce its speed when the sea gets worse, running in that case in *displacement mode* (3.11).

© ISO 2020 – All rights reserved

Documents
Document Sharing Hub
Full document details: BS EN ISO 12215-7:2020

[SOURCE: ISO 12215-5:2019, 3.10, modified - the definition slightly reworded and "craft" replaced with "motor craft".]

3.14
non-walking area
area of the craft comprising those areas defined in the owner's manual as being both outside of the working deck and where people are not liable to stand or walk in normal or emergency operation, and those of the working deck of a *multihull* (3.1) with an inclination of more than 25° against the horizontal in the longitudinal and transverse directions

Note 1 to entry: All other areas of the working deck, cockpit bottom and superstructures are deemed to be walking areas.

4 Symbols

Unless specifically otherwise defined, the symbols shown in Table 1 are used in this document. The symbols are shown by group type and in alphabetical order.

Unless otherwise specified, all dimensions, measured in m_{LDC} condition, are according to ISO 12217.

Table 1 — Symbols, dimensions, factors, parameters

Symbol	Unit	Designation/Meaning of symbol	Reference/ Clause concerned
		General dimensions and data	
B_{BH}	m	Beam between hulls as defined in Table 4	6.1, Fig 2 & Annex D
B_C	m	Chine beam at 0,4 L_{WL} from the origin used for k_{DYNM1} and $P_{BMUP\ BASE}$	6.1.1, Fig 1 & Table 7
B_{CB}	m	Beam between centres of buoyancy	6.1, 12.5 & Fig 2
B_{CP}	m	Beam between upper shrouds chainplates	Annex B
B_{WDx}	m	Beam at the inside of wet deck/beam connection with hulls at section x	6.1.3 & Fig 2
B_H	m	Beam of hull according to 3.6	6.1 & Fig 2
B_{nOHi}	m	Beam at overhang root, n = F(fwd) M(mid), A(Aft), and i = H(Hull), F(Float)	Table 11, Fig 9
L_{nOHi}	m	Length of overhang, n = F(fwd) M(mid), A(Aft), and i = H(Hull), F(Float)	Table 11, Fig 9
D_{ROH}	m	Depth of hull at overhang root	Table 11, Fig 9
D_{WL}		Design Waterline plan or section	6.1.3, Figure 2
h_{SIDEx}	m	Height of mid panel of cockpit side or stiffener below overflow level	Table 5 it. 10
H_{SUPx}	m	Height of mid panel or stiffener above the lesser of Z_{SDTMx} or Z_{SDAMx}	Table 5 it. 10
$L_{C\,i}$	m	Length of crossbeam i	Table 11, Fig 9
L_{BB}	m	Length between main beams centre of inertia	Annex B & C
L_H	m	Length of hull	1
L_{FLOAT}	m	Length of a trimaran float	9.4 & Fig 9
L_{WL}	m	Length of waterline	Fig 2
m_{LDC}	kg	Mass of craft in fully loaded condition	3.3, 9
m_{MO}	kg	Mass in minimum operating condition	3.4, 11
T_C	m	Max canoe body draught (see Figure 2)	Fig 2, 9.3
V	Knots	Craft maximum speed in m_{LDC} condition	3.9, Table 5 it. 2
		Panels, stiffeners and local dimensions and data	
A_D	m^2	Panel or stiffener supported area	Table 5 it. 9

© ISO 2020 – All rights reserved
Documents
Document Sharing Hub
Full document details: BS EN ISO 12215-7:2020

Table 1 *(continued)*

Symbol	Unit	Designation/Meaning of symbol	Reference/ Clause concerned
b	mm	Small unsupported dimension of panel plating	Table 5 it. 9
l	mm	Large unsupported dimension of panel plating	Table 5 it. 9
s	mm	Stiffener spacing (small unsupported dimension of stiffener)	Table 5 it. 9
l_u	mm	Stiffener length: long unsupported dimension of stiffener (frame/ stringer)	Table 5 it. 9
Q_x		Point at section x where the pressure is assessed	Figures 2 & 3
T_x	m	Local canoe body draught at section x (see Figure 2)	Fig 2
x	m	Distance of a section x from aft of L_{WL}	Fig 2, 9.3
Z_{Qx}	m	Height of point Q_X above D_{WL} at section x	Fig 2, 9.3
Z_{Tx}	m	Height of local canoe body above D_{WL} at section x (usually <0)	Fig 2, 9.3
Z_{Cx}	m	Height of local hard chine above D_{WL} at section x for planing craft	Fig 2, 9.3
Z_{SDAFx}	m	Height of actual side/deck limit for trimaran float at section x	Fig 2, Table 4
Z_{SDTMx}	m	Height above D_{WL} of the theoretical side/deck limit at section x	Fig 2, Table 3
Z_{SDAMx}	m	Height above D_{WL} of the actual side/deck limit at section x	Fig 2, Table 3
Z_{WDTx}	m	Height above D_{WL} of the theoretical wet deck height at section x	Fig 2, 9.3
Z_{WDAx}	m	Height above D_{WL} of the actual height of wet deck at section x	Fig 2, 9.3
α_{LSx}, α_{TSx},	Degree	Longitudinal and transverse angle of superstructure at section x	Fig 2, Table 5
α_{LWDx} $\alpha_{LDx,}$	Degree	Longitudinal slope angle against horizontal of wet deck or deck/cross-beam at section x	Fig 8, Table 5 it 9
β_x	Degree	Deadrise at section x, of planing craft, not to be taken <30° nor >60°	Fig 2, 9.3
$\beta_{0,4}$	Degree	Deadrise of planing craft at section x/L_{WL} = 0,4,	Fig 2, 9.3
Calculation data, factors, etc.			
k_{AR}	1	Area pressure distribution factor	Table 5 it. 9
k_{BWD}	1	Wet deck transverse pressure distribution factor	Table 5 it. 6
k_{DC}	1	Design category factor	Table 5 it. 1
k_{DRx}	1	Deadrise pressure reduction factor for planing multihulls in planing mode	Table 5 it. 8
k_{DYNM}	g's	Dynamic load factor for multihulls, see Figure 4	Table 5 it. 2
k_{LDMx}	1	Deck longitudinal pressure distribution factor for multihulls	Table 5, Fig 4
k_{LMx}	1	Side longitudinal pressure distribution factor for multihulls	Table 5, Fig 3
k_{LMTx}	1	Side longitudinal pressure distribution factor for trimaran float	9.4.1
k_{DLMTx}	1	Deck longitudinal pressure distribution factor for trimaran float	9.4.1
k_{LWDx}	1	Wet deck longitudinal pressure distribution factor	Table 5, Fig 5
k_{SUPx}	1	Superstructure/deckhouse pressure distribution factor for multihulls	Table 5 it. 10
k_{Sx}	1	Slope factor respectively k_{SDx} or k_{SDx} for deck and wet deck, see Figure 8	Table 5 it. 11
k_{ZDMx}	1	Vertical pressure correction for deck where $Z_{SDAMx} < Z_{SDTMx}$	Table 6 it. 1
k_{ZMIx}	1	Inner side/bottom vertical pressure correction factor in way of wet deck for sail and displacement multihulls	Table 6 it. 3
k_{ZMOx}	1	Outer and inner side/bottom vertical pressure correction factor clear of wet deck for sail and displacement multihulls	Table 6 it. 2
k_{ZPMIx}	1	Inner side/bottom vertical pressure correction factor in way of wet deck for planing multihulls in planing mode	Table 7 it. 3
k_{ZPMOx}	1	Outer and inner side/bottom vertical pressure correction factor clear of wet deck for planing multihulls in planing mode	Table 7 it. 2
k_{ZWDx}	1	Wet deck vertical pressure correction factor	Table 5 it. 7

© ISO 2020 – All rights reserved

Documents
Document Sharing Hub
Full document details: BS EN ISO 12215-7:2020

Table 1 *(continued)*

Symbol	Unit	Designation/Meaning of symbol	Reference/ Clause concerned
Design pressures for sailing and displacement motor multihulls			
$P_{BMU\ BASE}$	kN/m²	Base pressure for sailing and displacement catamarans and trimarans central hull	Table 6 it. 1
P_{BMUx}	kN/m²	Design pressure at lowest point of section x	Table 6 it. 1
P_{WDx}	kN/m²	Design wet deck/crossbeam bottom design pressure at section x	Table 6 it. 1
$P_{DMU\ BASE}$	kN/m²	Base design pressure for deck and cockpit bottom	Table 6 it. 1
P_{DMUx}	kN/m²	Design pressure for deck and cockpit bottom at section x	Table 6 it. 1
P_{HMUIx}	kN/m²	Inner design pressure in way of wet deck/crossbeam at section x	Table 6 it. 3
P_{HMUOx}	kN/m²	Outer and inner design pressure clear of wet deck/crossbeam at section x	Table 6 it. 2
P_{SUPMx}	kN/m²	Superstructure and cockpit side design pressure at section x	Table 6 it. 4
Design pressures for planing multihulls in planing mode			
$P_{BMUP\ BASE}$	kN/m²	Base bottom design pressure for planing multihulls in planing mode	Table 7 it. 1
P_{HMUIPx}	kN/m²	Inner design pressure in way of wet deck/crossbeam for planing multihulls in planing mode at section x	Table 7 it. 1
P_{HMUOPx}	kN/m²	Outer and inner design pressure for planing multihulls in planing mode clear of wet deck/crossbeam at section x	Table 7 it. 2
Design pressures for trimaran floats			
$P_{TRF\ BASE}$	kN/m²	Base bottom pressure for trimaran float (same as for central hull)	Table 8
P_{TRFx}	kN/m²	Bottom/side design pressure for trimaran floats at section x	Table 8
Stresses, shear forces and moments			
σ_d, τ_d	N/mm²	Design stress for global loads	Table 12
q	N/mm	Shear flow such as $\tau = q/t$	Tables C.1, C.3
M_B	Nm, kNm	Bending moment, design or ultimate	Annex D
M_T	Nm, kNm	Torsional moment, design or ultimate	Table 14
F	N, kN	Force, shear force	Tables 14, 15

5 Application of this document

5.1 Materials

The materials considered in this document are the main modern building materials listed in Clause 1 and Table 17 of ISO 12215-5:2019. This document may be used with other materials, including new fibres and resins, provided that they show similar cohesion, durability, resistance to marine environment and elongation at break as the ones quoted in Table 17 of ISO 12215-5:2019.

5.2 Limitations

The shape of multihulls entails that significant deflexions are observed without rupture of structural elements. In contrast, non-structural elements (i.e. accommodations) are sometimes stiffer, but not necessarily stronger, than the structural elements and can suffer from this difference of behaviour. This is not considered in this document provided the structural elements are strong enough. The strength and arrangements of non-structural elements are left to the responsibility and experience of the manufacturer.

On multihulls, the value of the loaded displacement m_{LDC} has a greater influence on the loads than for monohulls. Exceeding the m_{LDC} value can cause significant load increase which can transform a craft

© ISO 2020 – All rights reserved
Documents
Document Sharing Hub
Full document details: BS EN ISO 12215-7:2020

meeting the requirements of this document into a non-conform craft, for example a lower wet deck clearance induces a much greater pressure. Overloading shall therefore be avoided, and a caution information shall be included in the owner's manual, see 15.2.

5.3 Overall procedure for the application of this document

Table 2 describes, by steps, the overall procedure of this document for scantlings determination.

Table 2 — Overall procedure for scantlings determination

Step N°	Subject	Clause N°
1	Main dimensions, data and areas	6
2	Dimensions of panels and stiffeners under local loads	7
3	Local pressure adjustment factors	8
4	Local design pressures	9
5	Further analysis of structural elements subject to local loads	10
6	Multihull rudders, appendages and their wells	11
7	Multihull global loads	12
8	Structural arrangements for supporting global loads	13
9	Multihulls used as commercial craft and workboats	14
10	Information to be included in the owner’s manual	15

6 Main dimensions, data and areas

6.1 Dimensions and data

6.1.1 General

The dimensions are usually the same as in ISO 12215-5:2019, many of them being as defined in ISO 8666, see Table 1 and Figures 1 and 2. The figures show sections at any longitudinal coordinate x, measured from aft of D_{WL} and some values like B_{WD}, B_{BH}, etc. shall be taken as the average values of B_{WDx}, B_{BHx}, etc. For clarification, data that vary with length x are followed by index x.

6.1.2 Bottom deadrise of the hulls βx and chine beam B_Cx of planing multihulls

Figure 1 explains local chine beam B_{Cx} and deadrise determination for planing craft at any section x:

— where the bottom hulls sections of planing multihulls are approximately straight lines, the deadrise is the actual deadrise β_x [see Figures 1 a), b) and d) and at right part of Figure 2 c)], and

— where the bottom has round bilges, the deadrise β_x shall be measured as the angle between lowest point of the hull bottom (hull centreline) and the point where the bottom is tangent to a line angled 50° from horizontal [see Figure 1 c) and at right part of Figure 2 c)].

For planing multihulls that reach speeds allowing them to progress in planing mode (3.13), the chine beam B_C and corresponding deadrise angle $\beta_{0,4}$, measured at x = 0,4 L_{WL} from their aft end, are used for the determination of k_{DYNM1} and bottom pressure of planing multihulls $P_{BMU\ BASE}$.

Where the bottom of a planing catamaran is not symmetrical, as in Figure 2 g), the bottom has an angle β_{xo} on the outer side and β_{xi} on the inner side. In the inner side, the deadrise factor k_{DR} defined in item 8 of Table 5 lowers significantly the design pressure.

© ISO 2020 – All rights reserved

Documents
Document Sharing Hub
Full document details: BS EN ISO 12215-7:2020

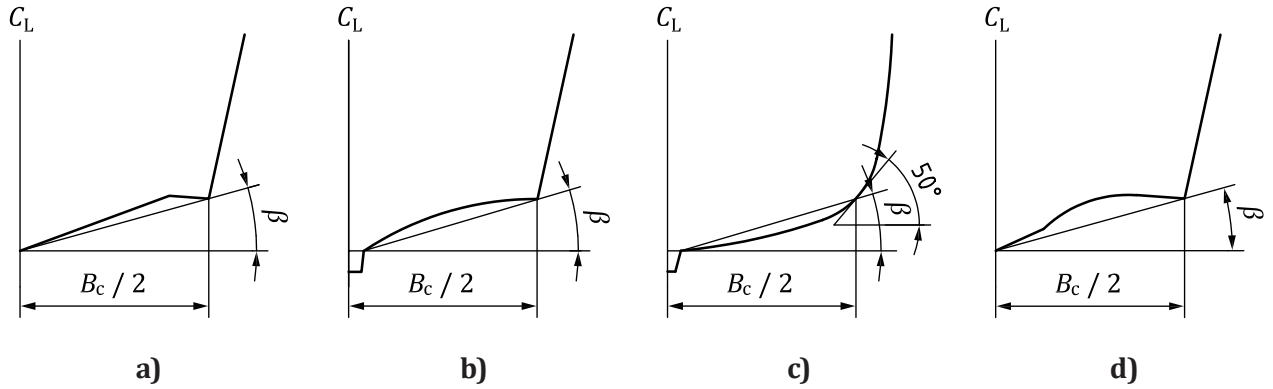

Figure 1 — Measurement of chine beam B_{Cx} and deadrise angle β_x

6.1.3 Wet deck bottom

See definitions of wet deck in Table 4.

For catamarans: the actual local height of the wet deck Z_{WDAx} at section x is its height above $D_{WL,}$ see Figure 2 b). Where the wet deck bottom height is not constant, it shall be taken as the average height of 80 % of its width inside the limits of its connection with the hull plating B_{BWDx}. Where there are parts with a width greater than 0,33 B_{WDx} and with a height differing by more than 10 % from Z_{WDAx}, each of these panels shall be assessed as a specific panel. B_{WDx} is the beam of the wet deck, averaged if variable, inside the angle or fairing/connection with the hulls, it is used for the calculation of k_{BWD} in item 6 of Table 5.

Where different from horizontal, the angles of the wet deck bottom α_{WDLx} against the horizontal increase the wet deck pressure of the wet deck or crossbeams, see item 11 of Table 5 and corresponding figure.

For sailing trimarans, the wet-deck height is measured perpendicular to a sloped plan angled from D_{WL}, cutting it a C_L and at x = 0,5 L_{WL} and the float axis at key point 17 of Figure 2 d) to e) at the height Z_{WDT} above its bottom; see left part of Figure 2 d). This point 17 needs not be taken higher than the point at which the float is dipped in the water in sail configuration S_{C1} of ISO 12215-10 (apparent wind speed where the full sail area begins to be reduced).

For motor trimarans, the wet-deck height is measured perpendicular to the same sloped plan as for sailing trimarans but angled so that point 17 is taken at a height 0,5 Z_{WDT} above the float's bottom.

NOTE This sloped plan for trimarans considers the "envelope" of the waterline both when the craft heels when beating upwind and when it is close to upright when running.

6.1.4 Crossbeams

Crossbeams for catamarans and trimarans are defined in Table 4.

For local loads, the front and bottom parts of crossbeams lower than Z_{WDTx} are considered as part of the wet deck bottom, and the parts above are considered side or deck whether they are below or above Z_{SDTMx}

© ISO 2020 – All rights reserved
Documents
Document Sharing Hub
Full document details: BS EN ISO 12215-7:2020

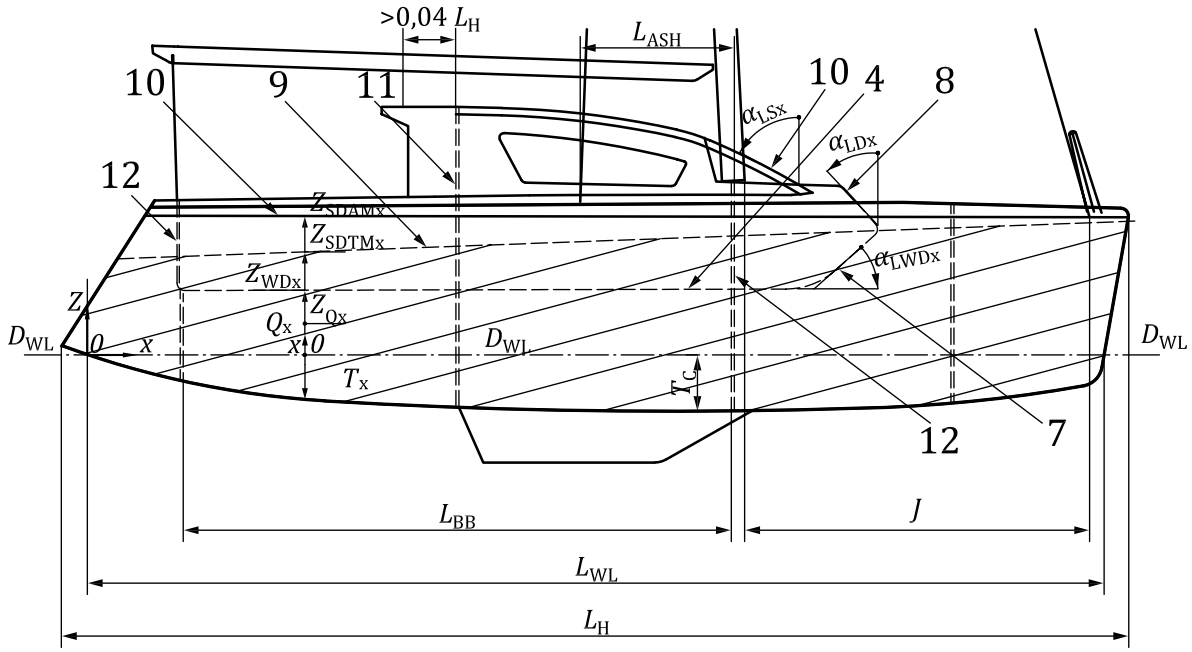

a) Typical sailing catamaran, side view

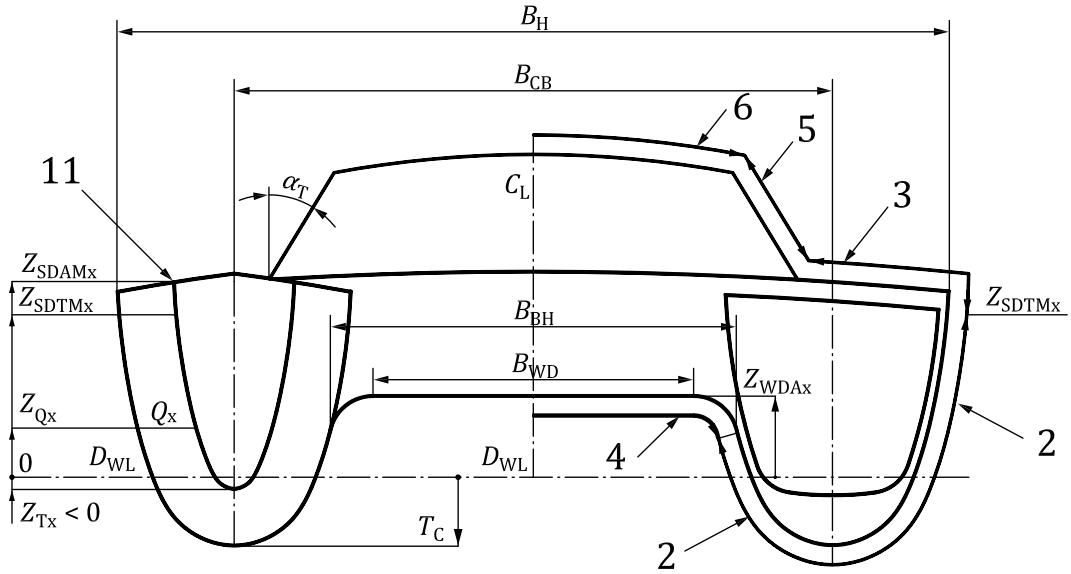

b) Typical sailing catamaran, view at main section and any section x

© ISO 2020 – All rights reserved

Documents
Document Sharing Hub
Full document details: BS EN ISO 12215-7:2020

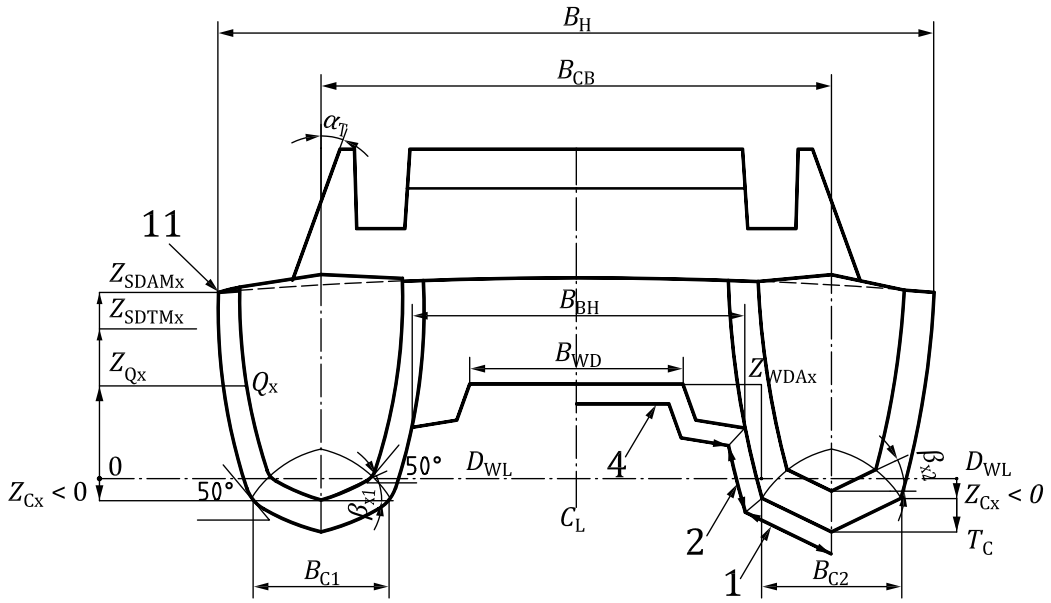

c) Typical motor catamaran, view at main section and any section x (round bilge/hard chined)

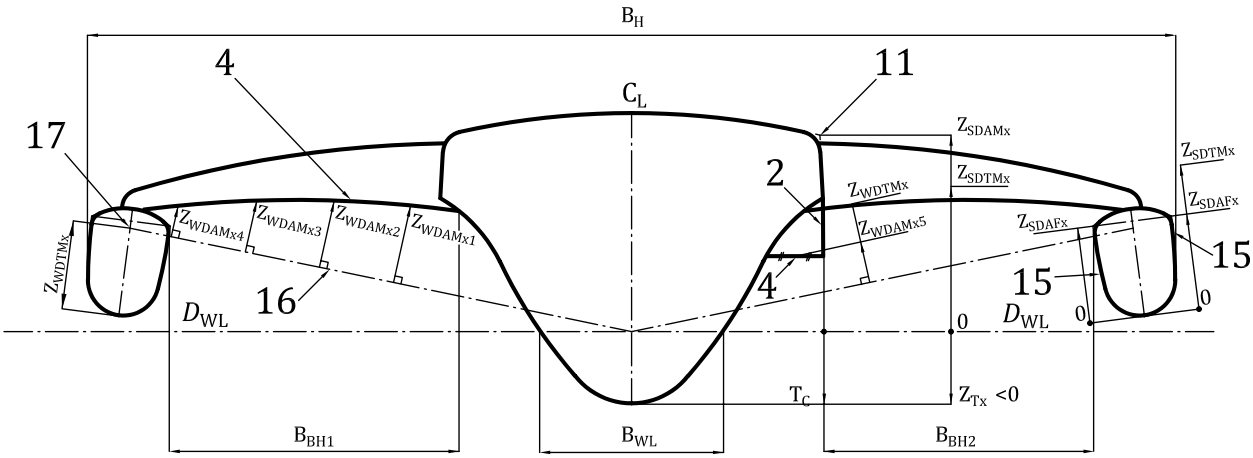

d) Typical sailing trimaran, view at mid-section x/L_{WL} = 0,5

© ISO 2020 – All rights reserved
Documents
Document Sharing Hub
Full document details: BS EN ISO 12215-7:2020

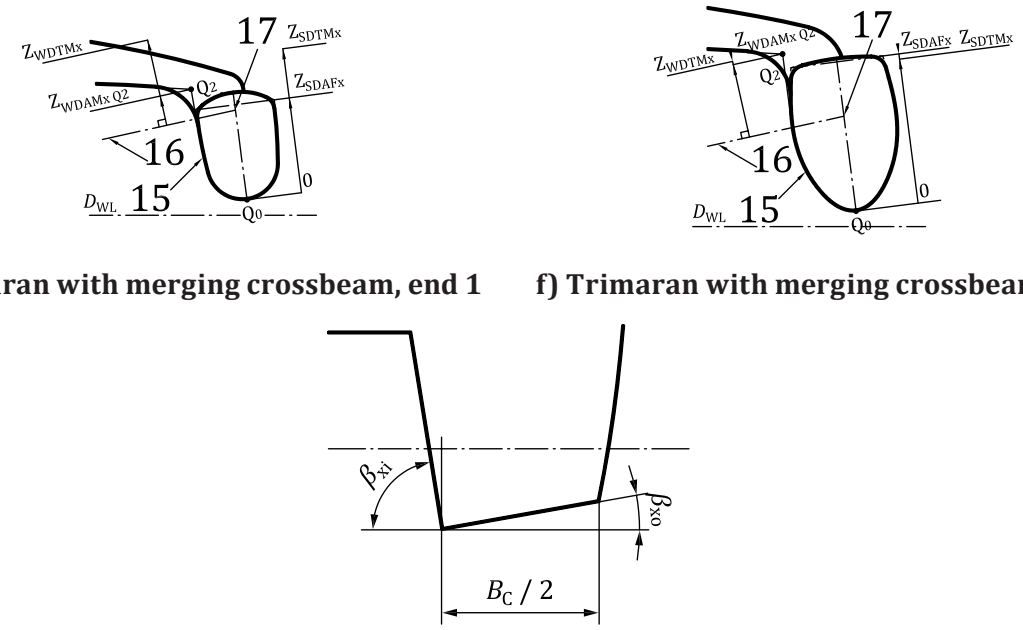

e) Trimaran with merging crossbeam, end 1 **f) Trimaran with merging crossbeam, end 2**

g) Non-symmetrical planing hull section

Keys

1	bottom area (planing)	10	Z_{SDTMx} theoretical limit side/deck
2	bottom/side area (non planing)	11	Z_{SDAMx} actual limit side/deck
3	deck area	12	protected aft bulkhead/superstructure (if ≥0,04 L_H, see Table 5, item 10)
4	wet deck/crossbeam bottom area	13	mainsheet bulkhead/crossbeam (sailing multi)
5	superstructure side area	14	mast bulkhead/cross beam (sailing multi)
6	superstructure top area	15	side of trimaran float
7	bottom front of wet deck (angle α_{LWDx})	16	sloped plan between C_L at 0 and height Z_{WDTM} along float C_L at section x/L_{WL} = 0,5
8	front of deck (angle α_{LDx})		
9	front of superstructure (angle α_{SL})	17	point defining the end of the sloped plan

Figure 2 — General dimensions of a multihull

6.2 Areas

The hull, deck and superstructure are divided into various areas: bottom/side, wet deck/crossbeams, deck and cockpit bottom, cockpit sides and superstructure, see Figure 2.

The "theoretical" hull/deck connection height Z_{SDTMx} is defined in item 1 of Table 3. Above this height, the side pressure is considered to be the deck pressure to avoid penalizing the structure of craft with a high freeboard. In contrast, below Z_{SDTMx} the deck pressure and side pressure are increased as more prone to be submerged or subject to wave shocks, see Tables 6 and 7. The hatched area in Figure 2 a) represents the outer plating subject to bottom/side pressure P_{BHMUx}.

Figure 2 b) shows a section of a typical sailing catamaran, whereas Figure 2 c) shows a section of a typical motor multihull, the right part is the one of a typical, hard-chined planing catamaran and the left part, a section with round bilges. The bottom/side pressure P_{HMUOx} or P_{HMUOPx}, (in displacement or

© ISO 2020 – All rights reserved

Documents
Document Sharing Hub
Full document details: BS EN ISO 12215-7:2020

planing mode) applies up to the Z_{STDMx} line, i.e. the hatched area in Figure 2 a). This applies to the outer plating or the inner plating not in way of the wet deck/crossbeams.

NOTE According to the multihull design, the Z_{SDTMx} line for the theoretical side/deck limit can be above or below the actual height. Z_{SDTMx}. Figure 2 a) shows a cruising catamaran with $Z_{SDAMx} > Z_{SDTMx}$.

The "theoretical" wet deck height Z_{WDTx} line is defined in item 2 of Table 3. Above this height, the pressure lowers slowly with freeboard and below this height, the pressure raises quickly when wet deck height is closer to the waterline, see k_{ZWD} in Table 5.

Table 3 — Height of theoretical hull deck connection and wet deck connection according to L_{WL} and x/L_{WL}

1- Theoretical height of hull/deck connection $Z_{STDMx} = (0{,}028\,6 \times L_{WL} + 0{,}115)\, x/L_{WL} + 0{,}057\,1\, L_{WL} + 0{,}229$ (m)										
L_{WL} (m)		8	10	12	14	16	18	20	22	24
		Values of $Z_{STDM\ x}$ at section x according to L_{WL} and x/L_{WL}								
x/L_{WL}	0,00	0,69	0,80	0,91	1,03	1,14	1,26	1,37	1,49	1,60
	0,50	0,86	1,00	1,14	1,29	1,43	1,57	1,71	1,86	2,00
	1,00	1,03	1,20	1,37	1,54	1,72	1,89	2,06	2,23	2,40
2- Theoretical height of hull/wet deck connection $Z_{WDTx} = (0{,}018\,6 \times L_{WL} + 0{,}074\,8)\, x/L_{WL} + 0{,}037\,1\, L_{WL} + 0{,}148\,9$ (m)										
L_{WL} (m)		8	10	12	14	16	18	20	22	24
		Values of $Z_{WDT\ x}$ at section x according to L_{WL} and x/L_{WL}								
x/L_{WL}	0,00	0,45	0,52	0,59	0,67	0,74	0,82	0,89	0,97	1,045
	0,50	0,56	0,65	0,74	0,84	0,93	1,02	1,11	1,21	1,30
	1,00	0,67	0,78	0,89	1,00	1,11	1,23	1,34	1,45	1,56

Table 4 defines the various areas of a multihull.

Table 4 — Definition of bottom/side, transom, wet deck and crossbeams deck, cockpit and superstructure areas

1-Sailing craft and motor catamarans in displacement mode, see Figure 2 b) and 2 c)	
Area	**Definition**
Bottom/ side + transom	Outside wet deck/crossbeam area, anywhere from lower limit of T_{Cx} up to Z_{SDTMx} the "theoretical limit" side/deck connection, or actual side deck connection Z_{SDAMx}, whichever the lower. In way of wet deck/crossbeams: from lower limit of T_{Cx} up to actual wet deck/crossbeam bottom connection/fairing or Z_{WDTx}, whichever the lower.
Deck and cockpit bottom	Lower horizontal or near horizontal area of the craft structure located above hull side. If there are several deck levels, it is the lower one at the considered section. Where $Z_{SDA} \leq Z_{SDT}$ it is subject to bottom/side/transom pressure, otherwise it is subject to deck pressure (see Tables 6 and 7).

© ISO 2020 – All rights reserved
Documents
Document Sharing Hub
Full document details: BS EN ISO 12215-7:2020

Table 4 *(continued)*

Wet deck/ crossbeams	Area between the intersection of inner bottom/side with centre hull of trimaran or other hull of catamaran, where not permanently below D_{WL} at actual height Z_{WDAx} or average height if differences of height. Also, any area with an angle <15° from the horizontal protruding more than 0,2 m from the inner side of a catamaran or trimaran float or central hull shall be considered subject to the wet deck pressure. Other such areas with another angle or less and protruding less than 0,2 m are part or inner hull sides or trimaran centre hull. B_{WD} is the beam of the wet deck, averaged if variable, inside the angle or fairing connection with the hulls. B_{BH} is the beam of the wet deck at its connection with the hulls, averaged if variable, i.e. outside the angle or fairing connection with the hulls. If there is not fairing or connection $B_{WD} = B_{BH}$.
2-Motor catamarans in planing mode, see Figure 2 b)	
Area	**Definition**
Bottom	Where $\beta_x \leq 20°$ and where local chine is below D_{WL}.: up to local chine Z_{Cx}. Where $\beta_x > 20°$ and/or where local chine is above D_{WL}.: up to D_{WL}. This is the case for the bottom/side plating on the inside in Figure 2 g).
Side+ transom	Above the local chine Z_{cx} or D_{WL}, whichever the lower.
Deck and cockpit bottom	Same definition as for sailing and motor displacement multihulls.
Wet deck/ crossbeams	Same definition as for sailing and motor displacement multihulls.
3-Sailing and motor trimarans, see Figure 2 d) to 2 f)	
Area	**Definition**
Main hull: bottom, side and transom	Same as for catamarans (item 1 for sailing/displacement and item 2 for planing) and measured with the craft upright. See Note a in Table 7 defining *Bc* for trimarans.
Wet deck/ crossbeams	For sailing trimarans Z_{WDAx} is measured perpendicular to a sloped plan defined in 6.1.3, see Figure 2 d) right. For motor trimarans Z_{WDAx} is measured perpendicular to the waterline, craft upright. For trimarans, B_{BH} is as defined for catamarans, except that it is measured between the main hull and the floats, whichever the greatest value being chosen, where not symmetrical, and considering possible main hull bulges, see Figure 2 d).
Trimaran floats	For the outer sides and inner side of floats outside of wet deck/crossbeams area, the actual height of the intersection between side/bottom and deck, see key 4 in Figure 2 c), is called Z_{SDAFx} (height of actual float side/deck limit) and is measured along the float axis perpendicularly from float bottom. Where the bottom of the wet deck/crossbeams bottom does not merge with the inner sides of floats, the pressure of the inner side of floats is considered as for the outer sides. Where the bottom of the wet deck/crossbeams bottom merges with the inner sides of floats, the inner float pressure is calculated as P_{HMUIx} or P_{HMUIPx} in Table 6 or 7. Figure 2 e) and f) show details of calculation of the heights (and therefore pressure) of the inner side of float where the wet-deck/crossbeams merge with the inner plating of floats. Point Q_2 is the intersection of the extension of the wet-deck/crossbeam before the fairing radius with a line parallel to the float axis extending the float plating. This point defines the height $Z_{WDAMQx2}$ where the wet deck/inner plating pressure is calculated, as per Tables 6 and 8.
CAUTION — As the hull/float pressure increases in way of wet deck/crossbeams areas, the scantlings shall vary progressively longitudinally forward or aft the wet deck/crossbeam limit.	

© ISO 2020 – All rights reserved

Documents
Document Sharing Hub
Full document details: BS EN ISO 12215-7:2020