BS EN ISO 12215-9:2018

BSI Standards Publication

Small craft – Hull construction and scantlings

Part 9: Sailing craft appendages (ISO 12215-9:2012)

Documents
Document Sharing Hub

Full document details: BS EN ISO 12215-9:2018

National foreword

This British Standard is the UK implementation of EN ISO 12215-9:2018. It is identical to ISO 12215-9:2012. It supersedes BS EN ISO 12215-9:2012, which is withdrawn.

The UK participation in its preparation was entrusted to Technical Committee GME/33, Small craft.

A list of organizations represented on this committee can be obtained on request to its secretary.

This publication does not purport to include all the necessary provisions of a contract. Users are responsible for its correct application.

© The British Standards Institution 2018
Published by BSI Standards Limited 2018

ISBN 978 0 580 51610 8

ICS 47.080

Compliance with a British Standard cannot confer immunity from legal obligations.

This British Standard was published under the authority of the Standards Policy and Strategy Committee on 31 October 2018.

Amendments/corrigenda issued since publication

Date	Text affected

Documents
Document Sharing Hub

Full document details: BS EN ISO 12215-9:2018

EUROPEAN STANDARD

NORME EUROPÉENNE

EUROPÄISCHE NORM

EN ISO 12215-9

October 2018

ICS 47.080

Supersedes EN ISO 12215-9:2012

English Version

Small craft - Hull construction and scantlings - Part 9: Sailing craft appendages (ISO 12215-9:2012)

Petits navires - Construction de coques et échantillonnage - Partie 9: Appendices des bateaux à voiles (ISO 12215-9:2012)

Kleine Wasserfahrzeuge - Rumpfbauweise und Dimensionierung - Teil 9: Anhänge von Segelbooten (ISO 12215-9:2012)

This European Standard was approved by CEN on 16 April 2018.

CEN members are bound to comply with the CEN/CENELEC Internal Regulations which stipulate the conditions for giving this European Standard the status of a national standard without any alteration. Up-to-date lists and bibliographical references concerning such national standards may be obtained on application to the CEN-CENELEC Management Centre or to any CEN member.

This European Standard exists in three official versions (English, French, German). A version in any other language made by translation under the responsibility of a CEN member into its own language and notified to the CEN-CENELEC Management Centre has the same status as the official versions.

CEN members are the national standards bodies of Austria, Belgium, Bulgaria, Croatia, Cyprus, Czech Republic, Denmark, Estonia, Finland, Former Yugoslav Republic of Macedonia, France, Germany, Greece, Hungary, Iceland, Ireland, Italy, Latvia, Lithuania, Luxembourg, Malta, Netherlands, Norway, Poland, Portugal, Romania, Serbia, Slovakia, Slovenia, Spain, Sweden, Switzerland, Turkey and United Kingdom.

EUROPEAN COMMITTEE FOR STANDARDIZATION
COMITÉ EUROPÉEN DE NORMALISATION
EUROPÄISCHES KOMITEE FÜR NORMUNG

CEN-CENELEC Management Centre: Rue de la Science 23, B-1040 Brussels

© 2018 CEN All rights of exploitation in any form and by any means reserved worldwide for CEN national Members.

Ref. No. EN ISO 12215-9:2018 E

Documents
Document Sharing Hub

Full document details: BS EN ISO 12215-9:2018

European foreword

The text of ISO 12215-9:2012 has been prepared by Technical Committee ISO/TC 188 “Small craft” of the International Organization for Standardization (ISO) and has been taken over as EN ISO 12215-9:2018.

This European Standard shall be given the status of a national standard, either by publication of an identical text or by endorsement, at the latest by April 2019, and conflicting national standards shall be withdrawn at the latest by April 2019.

Attention is drawn to the possibility that some of the elements of this document may be the subject of patent rights. CEN shall not be held responsible for identifying any or all such patent rights.

This document supersedes EN ISO 12215-9:2012.

This document has been prepared under a mandate given to CEN by the European Commission and the European Free Trade Association, and supports essential requirements of EU Directive 2013/53/EU.

For relationship with EU Directive 2013/53/EU, see informative Annex ZA, which is an integral part of this document.

According to the CEN-CENELEC Internal Regulations, the national standards organizations of the following countries are bound to implement this European Standard: Austria, Belgium, Bulgaria, Croatia, Cyprus, Czech Republic, Denmark, Estonia, Finland, Former Yugoslav Republic of Macedonia, France, Germany, Greece, Hungary, Iceland, Ireland, Italy, Latvia, Lithuania, Luxembourg, Malta, Netherlands, Norway, Poland, Portugal, Romania, Serbia, Slovakia, Slovenia, Spain, Sweden, Switzerland, Turkey and the United Kingdom.

Endorsement notice

The text of ISO 12215-9:2012 has been approved by CEN as EN ISO 12215-9:2018 without any modification.

AVA Documents
Document Sharing Hub

Full document details: BS EN ISO 12215-9:2018

Annex ZA
(informative)

Relationship between this European Standard and the Essential Requirements of Directive 2013/53/EU aimed to be covered

This European standard has been prepared under a Commission's standardization request M/542 C(2015) 8736 final to provide one voluntary means of conforming to Essential Requirements of Directive 2013/53/EU.

Once this standard is cited in the Official Journal of the European Union under that Directive, compliance with the normative clauses of this standard given in Table ZA.1 confers, within the limits of the scope of this standard, a presumption of conformity with the corresponding Essential Requirements of that Directive and associated EFTA regulations.

Table ZA.1 — Correspondence between this European Standard and Annex I of Directive 2013/53/EU

Essential Requirements of Directive 2013/53/EU	Clause(s)/sub-clause(s) of this EN	Remarks/Notes
Annex I, Part A, 2.5 – Owner's manual	7.7.1, D.3.4, F.2.4.2	These clauses specify warnings and information to be included in the owner's manual, if relevant.
Annex I, Part A, 3.1 - Structure	All clauses	This part of ISO 12215 provides requirements for the strength of monohull sailing boat appendages with conventional keel configurations. It deals with the design stresses and structural efficiency of the keel and its connections. The load cases correspond to those for most conventional keel configurations; however they may not be appropriate in all cases and designers or builders still need to ensure the suitability of their designs. Scantlings derived from this standard are primarily intended to apply to recreational sailing craft. Dimensioning is regarded as reflecting current practice provided the craft is correctly handled and operated at speeds appropriate to the prevailing sea state.

WARNING 1 — Presumption of conformity stays valid only as long as a reference to this European Standard is maintained in the list published in the Official Journal of the European Union. Users of this standard should consult frequently the latest list published in the Official Journal of the European Union.

WARNING 2 — Other Union legislation may be applicable to the product(s) falling within the scope of this standard.

Documents
Document Sharing Hub
Full document details: BS EN ISO 12215-9:2018

This page deliberately left blank

Documents
Document Sharing Hub

Contents

Page

Foreword iv

Introduction v

1 Scope 1

2 Normative references 1

3 Terms and definitions 2

4 Symbols 3

5 Design stresses 4

6 Structural components to be assessed 6

7 Load cases 6
7.1 General 6
7.2 Load case 1 — Fixed keel at 90° knockdown 7
7.3 Load case 2 — Canted keel steady load at 30° heel with dynamic overload factor 8
7.4 Load case 3 — Keelboat vertical pounding 9
7.5 Load case 4 — Keelboat longitudinal impact 10
7.6 Load case 5 — Centreboard on capsize recoverable dinghies 11
7.7 Load case 6 — Centreboard or dagger board upwind 11
7.8 Other load cases 12

8 Computational methods 15
8.1 General 15
8.2 General guidance for assessment by 3D numerical procedures 15
8.3 Assessment by strength of materials/non-computational-based methods 16

9 Compliance 16

Annex A (normative) **Application declaration** 18

Annex B (informative) **Information on metal for appendages and fasteners and "established practice" for fastening and welding** 19

Annex C (informative) **"Established practice" structural arrangement for ballast keels** 30

Annex D (informative) **"Established practice" calculation of keel fin strength (fixed or canting) and fixed ballast keel connected by bolts** 44

Annex E (informative) **Geometrical properties of some typical appendage foil shapes** 61

Annex F (informative) **Simplified fatigue strength assessment** 64

Bibliography 76

© ISO 2012 – All rights reserved

Documents
Document Sharing Hub

Full document details: BS EN ISO 12215-9:2018

Foreword

ISO (the International Organization for Standardization) is a worldwide federation of national standards bodies (ISO member bodies). The work of preparing International Standards is normally carried out through ISO technical committees. Each member body interested in a subject for which a technical committee has been established has the right to be represented on that committee. International organizations, governmental and non-governmental, in liaison with ISO, also take part in the work. ISO collaborates closely with the International Electrotechnical Commission (IEC) on all matters of electrotechnical standardization.

International Standards are drafted in accordance with the rules given in the ISO/IEC Directives, Part 2.

The main task of technical committees is to prepare International Standards. Draft International Standards adopted by the technical committees are circulated to the member bodies for voting. Publication as an International Standard requires approval by at least 75 % of the member bodies casting a vote.

Attention is drawn to the possibility that some of the elements of this document may be the subject of patent rights. ISO shall not be held responsible for identifying any or all such patent rights.

ISO 12215-9 was prepared by Technical Committee ISO/TC 188, *Small craft*.

ISO 12215 consists of the following parts, under the general title *Small craft — Hull construction and scantlings*:

— *Part 1: Materials: Thermosetting resins, glass-fibre reinforcement, reference laminate*

— *Part 2: Materials: Core materials for sandwich construction, embedded materials*

— *Part 3: Materials: Steel, aluminium alloys, wood, other materials*

— *Part 4: Workshop and manufacturing*

— *Part 5: Design pressures for monohulls, design stresses, scantlings determination*

— *Part 6: Structural arrangements and details*

— *Part 7: Scantling determination of multihulls*

— *Part 8: Rudders*

— *Part 9: Sailing craft appendages*

© ISO 2012 – All rights reserved
Documents
Document Sharing Hub
Full document details: BS EN ISO 12215-9:2018

Introduction

The reason underlying the preparation of this part of ISO 12215 is that standards and recommended practices for loads on the hull and the dimensioning of small craft differ considerably, thus limiting the general worldwide acceptability of craft.

The loss of a keel leading to craft capsize is one of the major casualty hazards on sailing craft and therefore the structural efficiency of all elements of the keel and its connection to the craft is paramount.

This part of ISO 12215 specifies the design loads and their associated stress factors. The user then has a choice between one or the other of the following available options for assessing the structural arrangement.

a) Use of advanced engineering methods which allow the structure to be modelled as three-dimensional: suitable methods include finite element analysis and subsets thereof such as matrix displacement or framework methods. General guidance is provided on modelling assumptions within this part of ISO 12215.

b) Use of simplified, generally two-dimensional, “strength of materials”-based stress equations: These are presented in Annexes B to F and, if this option is chosen, use of the equations will be necessary to fulfil the requirements of this part of ISO 12215.

This part of ISO 12215 has been developed applying present practice and sound engineering principles. The design loads and criteria of this part of ISO 12215 may be used with the scantling determination equations of this part of ISO 12215 or using equivalent engineering methods as indicated in a), above.

The dimensioning according to this part of ISO 12215 is regarded as reflecting current practice, provided the craft is correctly handled in the sense of good seamanship and equipped and operated at a speed appropriate to the prevailing sea state.

During the latter stages of the development of the ISO 12215 series, and after publication of key parts, a number of authorities adopted this International Standard for the assessment of high-performance racing yachts. While, in theory, a category A blue-water cruising yacht could experience the same loads as a competitive racing yacht, the latter has not been the principal focus of ISO 12215. Consequently, designers are strongly cautioned against attempting to design high-performance racing craft such that nearly all structural components only just comply.

© ISO 2012 – All rights reserved

Documents
Document Sharing Hub
Full document details: BS EN ISO 12215-9:2018

Documents
Document Sharing Hub

Small craft — Hull construction and scantlings —

Part 9:
Sailing craft appendages

1 Scope

This part of ISO 12215 defines the loads and specifies the scantlings of sailing craft appendages on monohull sailing craft with a length of hull, L_H, of up to 24 m, measured according to ISO 8666. It gives

— design stresses,

— the structural components to be assessed,

— load cases and design loads for keel, centreboard and their attachments,

— computational methods and modelling guidance, and

— the means for compliance with its provisions.

2 Normative references

The following referenced documents are indispensable for the application of this document. For dated references, only the edition cited applies. For undated references, the latest edition of the referenced document (including any amendments) applies.

ISO 898-1, *Mechanical properties of fasteners made of carbon steel and alloy steel — Part 1: Bolts, screws and studs with specified property classes — Coarse thread and fine pitch thread*

ISO 3506-1, *Mechanical properties of corrosion-resistant stainless steel fasteners — Part 1: Bolts, screws and studs*

ISO 8666, *Small craft — Principal data*

ISO 12215-3, *Small craft — Hull construction and scantlings — Part 3: Materials — Steel, aluminium alloys, wood, other materials*

ISO 12215-5:2008, *Small craft — Hull construction and scantlings — Part 5: Design pressures for monohulls, design stress, scantlings determination*

ISO 12215-6:2008, *Small craft — Hull construction and scantlings — Part 6: Structural arrangements and details*

ISO 12217-2, *Small craft — Stability and buoyancy assessment and categorization — Part 2: Sailing boats of hull length greater than or equal to 6 m*

© ISO 2012 – All rights reserved

Documents
Document Sharing Hub
Full document details: BS EN ISO 12215-9:2018

3 Terms and definitions

For the purposes of this document, the following terms and definitions apply.

3.1
design category
sea and wind conditions for which a craft is assessed to be suitable, provided the craft is correctly handled in the sense of good seamanship and operated at a speed appropriate to the prevailing sea state

3.1.1
design category A
"ocean category"
category of craft considered suitable to operate in seas with significant wave heights above 4 m and wind speeds in excess of Beaufort Force 8, but excluding abnormal conditions such as hurricanes

3.1.2
design category B
"offshore category"
category of craft considered suitable to operate in seas with significant wave heights up to 4 m and winds of Beaufort Force 8 or less

3.1.3
design category C
"inshore category"
category of craft considered suitable to operate in seas with significant wave heights up to 2 m and a typical steady wind force of Beaufort Force 6 or less

3.1.4
design category D
"sheltered waters category"
category of craft considered suitable to operate in waters with significant wave heights up to and including 0,3 m with occasional waves of 0,5 m height, for example from passing vessels, and a typical steady wind force of Beaufort 4 or less

3.2
loaded displacement mass
m_{LDC}
mass of the craft, including all appendages, when in the fully loaded ready-for-use condition as defined in ISO 8666

NOTE 1 The displacement includes all possible options (generator, air conditioning, etc.).

NOTE 2 The loaded displacement mass is expressed in kilograms.

3.3
sailing craft
craft for which the primary means of propulsion is wind power, having $A_{\mathrm{S}} > 0{,}07(m_{\mathrm{LDC}})^{2/3}$ where A_{S} is the total profile area of all sails that may be set at one time when sailing closed hauled, as defined in ISO 8666 and expressed in square metres

NOTE 1 For the headsails, A_{S} considers the area of the fore triangle.

NOTE 2 The area of the wing-mast(s) is included in A_{S}.

3.4
mass of keel
m_{KEEL}
mass of the ballast keel, i.e. keel fin plus bulb, where fitted, and, for twin or multiple keels, of a single keel

NOTE The mass of keel is expressed in kilograms.

© ISO 2012 – All rights reserved
Documents
Document Sharing Hub
Full document details: BS EN ISO 12215-9:2018

4 Symbols

For the purposes of this document, unless specifically otherwise defined, the symbols given in Table 1 apply.

Table 1 — Symbols, coefficients, parameters in the main core of ISO 12215-9

Symbol	Unit	Designation/meaning of symbol	(Sub)clause/table concerned
A_{CB}	m²	Area of fully deployed centreboard	7.7.1
A_S	m²	Reference sail area (mainsail + fore triangle + wing mast) as per ISO 12217-2	7.7.1
a	m	Distance along keel centreline, from centre of gravity (CG) of keel to keel junction with hull or tuck	7
c	m	Distance along keel centreline from keel junction to floor mid-height	7
c_a	m	Average value of c for several floors	7.5
e	m	Proportion of the total side force taken by the centreboard	7.7.1
F_i	N	Design force with i according to load case	7
g	m/s²	Acceleration of gravity = 9,81 m/s²	7
h_{CE}	m	Height of centre of area of A_S	7.7.1
h_K	m	Height of keel between its bottom and hull connection	7.5.2
h_{F4}	m	Height of application of force F_4 (load case 4)	7.5.2
k_{DC}	1	Design category coefficient	5, Table 2
k_{LC}	1	Load case coefficient	5, Table 3
k_{LD}	1	Length displacement coefficient	7.7.1
k_{MAT}	1	Material coefficient	5, Table 2
L_{WL}	m	Length of waterline in m_{LDC} conditions	7.5.2, 7.7.1
m_{LDC}	kg	See definition 3.2	3.2, 7
m_{KEEL}	kg	See definition 3.4	3.4, 7.4
M_{IJ}	N·m	Design bending moment, with index I and J according to load case	7
st_i	N/mm²	Stress, which can be σ or τ, and where i can be LIM, d, u, y, yw or yu	5
α	deg.	Angle of attack of centreboard foil	7.7
ε_R	%	Elongation at break	Table 2
θ	deg.	Angle between keel axis and centreline for canting keels	7.3

© ISO 2012 – All rights reserved

Documents
Document Sharing Hub
Full document details: BS EN ISO 12215-9:2018

5 Design stresses

The maximum stress shall be calculated for each relevant structural component and load case.

The design stress, st_d, is the relevant limit stress multiplied by various stress coefficients:

$$st_d = st_{LIM} \times k_{MAT} \times k_{LC} \times k_{DC} \text{ N/mm}^2 \quad (1)$$

where

st_{LIM} is the limit stress, with st representing either σ, in direct stress, or τ, in shear stress, and index LIM is as follows:

— for metal in unwelded state or well clear of HAZ, $\min\left(st_y;0,5 \times st_u\right)$, where index y is the yield strength and index u is the ultimate strength, i.e. σ_y, σ_u for direct stress, τ_y, τ_u for shear stress and σ_{by}, σ_{bu} for bearing stress;

— for metal within HAZ, $\min\left(st_{yw};0,5 \times st_{uw}\right)$, where index y is the yield strength and index u is the ultimate strength, i.e. σ_{yw}, σ_{uw}, for direct stress, τ_{yw}, τ_{uw} for shear stress and for $\sigma_{byw}, \sigma_{buw}$ bearing stress;

— for wood and fibre-reinforced polymer (FRP), the ultimate strength in tensile σ_{tu}, compressive σ_{cu}, flexural σ_{fu}, bearing, σ_{bu} or shear stress τ_u;

k_{MAT} is the material coefficient as defined in Table 2, with the design stress adjusted according to the material;

k_{LC} is the load case coefficient as defined in Table 3, with the design stress adjusted according to the load case;

k_{DC} is the design category coefficient as defined in Table 2, with allowance for an increase in design stress for lower design categories due to less severe dynamic loadings than in higher design categories.

Table 2 gives details on these variables.

The values of st_{LIM} — i.e. $\sigma_y, \sigma_u, \tau_u$ for unwelded metals, $\sigma_{yw}, \sigma_{uw}, \tau_{yw}, \tau_{uw}$ for welded metals in a heat-affected zone (HAZ), or σ_{tu}, σ_{cu}, σ_{fu}, σ_{bu} or τ_u for wood and FRP — shall be taken

— in accordance with ISO 12215-5:2008, i.e. according to tests or default values specified in its Annex C for FRP, its Annex D for sandwich core, and its Annex E for laminated wood and plywood,

— in accordance with Annex B for the listed metals, including, where relevant, ISO 3506-1 for stainless steel fasteners and ISO 898-1 for carbon steel or alloy steel fasteners, and

— for other metals, either from a recognized standard or from tests made in accordance with the relevant International Standard.

© ISO 2012 – All rights reserved
Documents
Document Sharing Hub
Full document details: BS EN ISO 12215-9:2018

Table 2 — Design stresses and stress coefficients

Variable	Material/designation	Value
st_{LIM}	Metals, unwelded or well clear of HAZ[a]	min.$\left(st_y;0,5\times st_u\right)$ [b,c]
	Metals, within HAZ, in welded condition[a]	min.$\left(st_{yw};0,5\times st_{uw}\right)$ [b,c]
	Wood or FRP as dictated by sense of applied stress	$\sigma_{uc},\sigma_{ut},\sigma_{uf},\sigma_{ub}$ and τ_u as relevant[c]
k_{MAT}	**Stress factor**	
	Metals with elongation at break, ε_R % ≥ 7	0,75
	Metals with elongation at break, ε_R % <7	min.(0,0625ε_R + 0,3125;0,75)[d]
	Wood and FRP	0,33
k_{LC}	**Stress factor** (see Table 3)	
k_{DC}	**Stress factor**	
	Craft of design categories A and B	1,00
	Craft of design categories C and D	1,25

a Generally, the heat-affected zone is considered as being 50 mm from the weld (see also the Note in F.3.4.3).

b For metals, $\tau = 0,58\times\sigma$.

c Bearing stress depends on material type (Ref [8] gives σ_{ub}/σ_{uc} = 2,8 for Glass CSM and 0,91 for roving), metal regulation usually gives 2,4 to 3 for bolts (but with restrictions: far from edges, min. bolt spacing, min. thickness/bolt d). Values derived from tests are recommended.

d The factor gives 0,75 for ε_R ≥ 7%, and 0,375 for ε_R =1% and linear interpolation in between. Values of ε_R are given in Table B.2.

Table 3 — Value of k_{LC} stress factor according to load case

Load case	Keels and appendages — Load case description	Subclause	Value of k_{LC}
1	Keel bolt[a]	7.2	0,67
	Other elements of fixed keel — metal	—	0,8
	Other elements of fixed keel — FRP[b]	—	0,9
2	Canting keel — metal	7.3	0,8
	Canting keel — FRP	—	0,9
3	Keel vertical pounding	7.4	1
4	Keelboat longitudinal impact	7.5	1
5	Dinghy capsize recovery (strength of centre/dagger board)	7.6	1,34
6	Centre/dagger board upwind	7.7	1,0

a Load case 1 treats bolts differently from other structural materials components. The design stress of bolts is lower than that of other structural components so as to recognize stress concentration effects in bolts and accord with long-standing design practice.

b The requirements of this part of ISO 12215 are strength-criteria based. In some cases, such as keel fins constructed of lower modulus materials, the need to limit deflections and/or increase natural frequencies may require a substantial increase in scantlings above those requirements. Such cases are outside the scope of this part of ISO 12215.

© ISO 2012 – All rights reserved

Documents
Document Sharing Hub
Full document details: BS EN ISO 12215-9:2018

6 Structural components to be assessed

CAUTION — Keel loss has been found on several occasions to be attributable to insufficient thickness of bottom plating in respect of the keel, in particularly, connecting bolts or inadequate load paths between connecting bolts and the corresponding structure, including bolts located too far from the relevant stiffener. It is strongly recommended that the provisions of D.5 and Table D.2 be followed and, in particular, for bolts located too far from a stiffener, those of Table D.2, item 3.

The following shall be considered when assessing or designing the structure covered by this part of ISO 12215.

— Keel-to-hull connection (bolts, wedge connection, stub keel, etc.) — see Figures 1, C.3, C.4 and D.1.

— Bottom shell plating in respect of the keel bolts and transition arrangements beyond the keel bolt zone into the hull structure: in the case of bolted keels on a hull bottom of sandwich construction, the general practice outlined in Annex D is to have a single skin construction for keel and bolts. If this is not the case, the structural arrangement shall ensure that all loads — keel compression loads, bolt preload, etc. — are safely transferred, using proper core material, inserts, etc. The risk of water permeating the sandwich core via the bolt holes shall be seriously considered.

— Backing plates/washers, where relevant.

— Floors, girders and associated supporting structure.

— Keel boxes.

— Fins, foils, centreboards, dagger boards.

Wherever possible, assessment should be conducted by numerical methods in accordance with Clause 8. Alternatively the “established practice” methods given Clause 9 shall be used.

Where calculation procedures do not exist, assessment should be conducted by a combination of semi-empirical methods and the established practice given in Clause 9.

7 Load cases

7.1 General

7.1.1 Status of design load cases

CAUTION — For load cases 1 and 2 (see references in the list below) **— where keels have a large rake angle, the centre of gravity (CG) of the bulb/fin can be located a significant distance aft or forward of the fin or bolt group longitudinal centre at the root. This will induce a torsional moment in addition to bending about the fore and aft axis, equal to the weight of the fin/bulb multiplied by the horizontal distance between the fin/bulb longitudinal centre of gravity (LCG) and root/bolt group LCG. In such cases, it will be necessary to combine direct stresses owing to bending with shear stresses due to the torque. The resulting von Mises equivalent stress shall not exceed the design stress given in Equation (1).** See also 7.8.1.

The design stress shall be assessed for each load case using Equation (1), together with the design stress coefficients given in Tables 2 and 3, as follows:

— 7.2 defines the *fixed keel 90° knockdown* load case 1 and corresponding force, F_1, and design bending moment, M_1, at 90° heel, for the keel at its root/bolt level and floor neutral axis, respectively; it shall be used for fixed keels, either vertical or angled as in the case of twin keel craft, and axially lifting/swing ballast keels;

© ISO 2012 – All rights reserved
Documents
Document Sharing Hub
Full document details: BS EN ISO 12215-9:2018

— 7.3 defines *canted keel* load case 2 and the corresponding force, F_2, and design bending moment, M_2, at 30° steady heel plus a dynamic overload factor; it shall only be used for canting keels;

— 7.4 defines *vertical pounding* load case 3 and design vertical force, F_3;

— 7.5 defines *longitudinal impact* load case 4 and design horizontal force, F_4, considering a longitudinal impact with a fixed or floating object or animal;

— 7.6 defines *dinghy capsize recovery* load case 5 and the design vertical force, F_5, in 90° knockdown, applied on the tip of a centreboard for dinghy capsize recovery;

— 7.7 defines *centreboard/dagger board* load case 6 and the transverse horizontal force, F_6, applied to centreboard or dagger board used while sailing upwind;

— 7.8 considers other load cases, particularly where specific designs bring combined stresses.

NOTE On ballast keels, any buoyancy or lifting forces (as the craft is considered to have stopped) which have been exerted have been neglected for simplification, making all calculations slightly conservative.

7.1.2 Limitation of load cases

This part of ISO 12215 is based on the presumption that load magnitudes are set at such a high level of severity that the number of expected occurrences during the lifetime of the craft will be low. Hence, all load cases are considered to be “static” in the sense that they are used in conjunction with static design stresses according to Tables 2 and 3.

This presumes a certain relationship between static strength and fatigue strength, which is generally preserved for unwelded metals of modest static strength and low stress concentration effects. However, for welded structures and poor detail design/fabrication, compliance with the “static” load cases cannot guarantee that fatigue failure will not occur. In such cases, an explicit fatigue life assessment or inspection regime shall be considered. See Annex F.

In addition, the load cases consider that, for bolted connections, the methods for assessing keel bolts are based on the presumption of a broadly uniform distribution of diameter and spacing along the fin root or keel flange (see D.4 for details).

7.2 Load case 1 — Fixed keel at 90° knockdown

This case corresponds to a 90° knockdown case (heeled at 90°) (see Figure 1), which is usually the most severe transverse bending load for fixed ballast keels:

$$F_1 = m_{\mathrm{KEEL}} \times \mathrm{g} \tag{2}$$

expressed in newtons (N) as the vertical force, at 90° knockdown, exerted by gravity at the keel CG

$$M_{1.1} = F_1 \times a \tag{3}$$

expressed in newton metres (N·m) as the keel heeling design moment at the keel junction

$$M_{1.2} = F_1 \times (a + c) \tag{4}$$

expressed in newton metres (N·m), keel heeling moment at floor mid height

where

a is the distance, in metres (m), along the keel centreline, from the keel CG to the keel's junction with the hull or tuck;

© ISO 2012 – All rights reserved

Documents
Document Sharing Hub
Full document details: BS EN ISO 12215-9:2018

c is the distance, in metres (m), along the keel centreline from the keel junction to the floor at mid-height;

g is the acceleration of gravity, taken as 9,81 m/s^2 and used throughout this part of ISO 12215.

For craft fitted with a fin and tuck [see Figure 1 b)], it may be necessary to consider a range of values of c to establish the most highly stressed point.

Annex C gives information on how to calculate the shear force and bending moment on each floor when these are analysed as independent beams.

NOTE For single fixed keels, when considered parallel to the centreline these bending moments correspond to a heel angle of 90°knock-down. For fixed twin keels [see Figure 1 c)], the cosine of angle ϕ from the horizontal when the craft is knocked down is not considered, as the keels will be parallel to the waterline at some point before or after the craft reaches 90° of heel.

7.3 Load case 2 — Canted keel steady load at 30° heel with dynamic overload factor

7.3.1 General

This case only applies to canting keels [see Figure 1 d)]. It corresponds to a steady heel at 30° that can be experienced as a long-term load in upwind passages, with an additional dynamic overload factor which represents the additional fluctuating load experienced as the craft progresses in an adverse seaway.

Load case 2 represents the normal upwind sailing condition for a craft with canted keel, but is augmented by a 40 % dynamic overload factor[1)] to allow for unusual combinations of rigid body motions and accelerations, and is thereby considered to constitute an infrequently occurring case, i.e. fatigue is not expected to be an issue required to be considered, except for welded metals relevant to 7.1.2:

$$F_2 = 1{,}4 \times m_{\mathrm{KEEL}} \times \mathrm{g} \tag{5}$$

expressed in newtons (N) as the vertical force exerted by gravity at the keel CG

$$M_{2.1} = F_2 \times a \times \sin\left(30° + \theta\right) \tag{6}$$

expressed in newton metres (N·m) as the canting keel design heeling moment at the keel junction

where θ is the maximum canting angle from axial (vertical) plane, and shall not be taken as greater than 60° or less than 30°.

NOTE 1 The lower limit of 30° ensures a load at least 22 % greater than load case 1.

NOTE 2 Very thin fins of canting keel, especially those of FRP construction, may need a “flutter” (vibration) analysis, but this is considered outside the scope of this part of ISO 12215 (see 7.1.2).

For calculation of floors, the keel design heeling moment of supporting structure floors is

$$M_{2.2} = F_2 \times \left[a \times \sin\left(30° + \theta\right) + 0{,}5\,c\right] \tag{7}$$

expressed in newtons (N) as the design bending moment of canting keel floors.

Annex C gives information on how to calculate the shear force and bending moment on each of the two “wet-box” bulkheads when these can be analysed as independent beams.

1) The dynamic overload factor for normal sailing conditions is in the order of 15–20 %.

© ISO 2012 – All rights reserved
Documents
Document Sharing Hub
Full document details: BS EN ISO 12215-9:2018

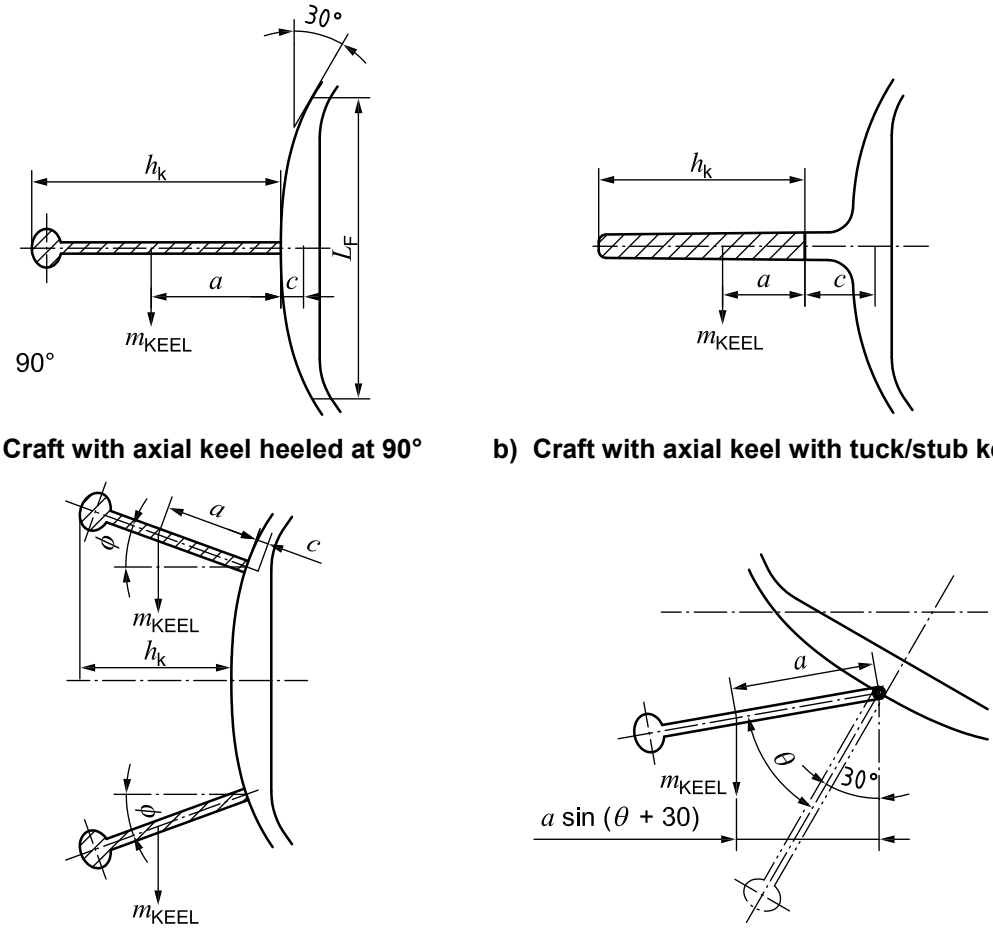

a) Craft with axial keel heeled at 90° **b) Craft with axial keel with tuck/stub keel**

c) Craft with twin keels heeled at 90° **d) Craft with canting keel heeled at 30°**

Figure 1 — Sketch of fixed axial keel, twin keels and laterally canting keel

7.3.2 Specific requirements for canting keel structure

The canting keel system shall be fitted with a box that is watertight at least up to 0,01L_{WL} above the deepest load waterline, in order to ensure water tightness in case of leakage or loss of keel. This water tightness may be achieved by flexible elements, e.g. bellows.

Structural elements shall be provided to support the efforts from the canting keel head, in case of leakage or a defect in the orientation rams or system, and to protect the surrounding structure, e.g. stops, locking pin, etc.

7.4 Load case 3 — Keelboat vertical pounding

This case considers a vertical impact load in relation to the events of dry-docking or purely vertical and upwards grounding:

$$F_3 = g\left(m_{LDC} - m_{KEEL}\right) \tag{8}$$

expressed in newtons (N) as the vertical pounding force exerted at keel bottom with the craft upright.

The bending moment is not specifically given here as it depends of the floor and keel arrangement (number, length, stiffness, end fixity, etc.). Annex C gives information on how to calculate the shear force and bending moment on each floor when these may be analysed as independent beams.

© ISO 2012 – All rights reserved

Documents
Document Sharing Hub
Full document details: BS EN ISO 12215-9:2018

The craft structure, keel connection and stiffeners shall be able to withstand a vertical force, F_3, exerted at the ballast keel bottom, passing through the keel CG, without exceeding the grounding design stresses defined in Clause 5.

For twin or multiple keels, 100 % of F_3 is considered to be applied on the bottom of each keel and its structure and attachment, as the grounding could happen on one keel. This will induce a bending moment for canted-out bilge keels that shall be taken into account (see 7.8.2).

Adjustable canting keels are considered in the “neutral” (cant angle of zero) position.

For lifting keels, this requirement applies to the worst case of deployed or retracted condition.

In the deployed condition, the lifting/deploying device shall

— either be able to support load F_3 without surpassing the design stress, or

— retract without damaging the actuating system until the retracted condition is attained.

7.5 Load case 4 — Keelboat longitudinal impact

7.5.1 Preliminary

The value of the force impact load F_4 has been defined by “reverse engineering” of previous satisfactory craft.

7.5.2 Value of longitudinal impact force and bending moment

The craft structure and keel connection shall be able to withstand, without exceeding design stresses, a longitudinal and horizontal force, F_4, exerted at the bottom of the leading edge of the keel and which does not need to be taken lower than $0{,}2L_{WL}$ below the loaded waterline.

CAUTION — The moments given in the following equations are not the bending moments in the various floors; see Annex C.

$$F_4 = 1{,}2 \times g \times \left(m_{LDC} - m_{KEEL}\right) \tag{9}$$

expressed in newtons (N) as the longitudinal and horizontal impact force

$$M_{4.1} = F_4 \times h_{F4} \tag{10}$$

expressed in newton metres (N·m) as the longitudinal bending moment at keel connection level

$$M_{4.2} = F_4 \times \left(h_{F4} + c_a\right) \tag{11}$$

expressed in newton metres (N·m) as the longitudinal bending moment at floor mid-height

where

$h_{F4} = \min\left(h_k; 0{,}2L_{WL}\right)$, expressed in metres (m), is the lesser of

— the height of the keel, h_k, measured parallel to the axial plane of the craft, between its bottom and its connection to the hull or skeg (see Figure 1), and

— $0{,}2L_{WL}$, measured from the loaded waterline;

c_a is the average vertical distance, in metres (m), of the c values from the keel junction to mid-height of the loaded floor.

© ISO 2012 – All rights reserved
Documents
Document Sharing Hub
Full document details: BS EN ISO 12215-9:2018

For canting keels, h_k is measured with the keel oriented so as to have the maximal draft, with the craft upright.

For twin or multiple keels, F_4 is considered to be applied on each keel at the level of h_{F4}, as defined above, because the impact can be on only one keel when heeled.

For lifting keels, h_k is measured with the keel fully deployed. The device shall resist F_4 in the worst case of deployed or retracted condition.

In the deployed condition, the lifting/deploying device shall either

— be able to support F_4 without surpassing the design stress, or

— retract without damaging the actuating system until the retracted condition is attained.

The centreboards and lifting keels that are not required by ISO 12217 to be locked in the deployed condition need not be considered for the application of F_4.

NOTE For tilting centreboards, the lifting rope or ram usually acts as a breaking-pin. For dagger boards, the well or a crash box acts as the device supporting F_4, but this is generally difficult to calculate.

7.6 Load case 5 — Centreboard on capsize recoverable dinghies

On capsize recoverable sailing craft, as defined in ISO 12217, and where the capsize recovery method, according to that International Standard, uses the centreboard as a lever, this centreboard shall be assessed using the more demanding of either F_5, calculated using Equation (12), or F_6 as defined in 7.7:

$$F_5 = 80 \times 9{,}81 \times n_{PR} \tag{12}$$

expressed in newtons (N) as the vertical force at the tip of the deployed centreboard on a knocked-down dinghy

where n_{PR} is the minimal required number of persons for recovering from capsize according to ISO 12217.

NOTE This requirement represents the case where the crew weight is pushed down on the tip of the centreboard to right the craft. The mass of 80 kg corresponds to a wet “sportsman”.

In either case, the greatest bending stress generally occurs at the point where the centreboard enters the hull. The centreboard shall be taken as fully deployed.

7.7 Load case 6 — Centreboard or dagger board upwind

7.7.1 Non-ballasted centreboards

The design force, F_6, exerted at the centre of surface of the outside area of a non-ballasted, fully deployed centreboard shall be the greater of

$$F_{6.1} = 136 \times (0{,}075\,\alpha) \times A_{CB} \times V^2 \tag{13}$$

expressed in newtons (N) as the design force from lift at angle of attack, α, or

$$F_{6.2} = e\frac{M_{RUP}}{h_{CE}} \tag{14}$$

expressed in newtons (N) as the design force balancing the force on sails when sailing upwind

© ISO 2012 – All rights reserved

Documents
Document Sharing Hub
Full document details: BS EN ISO 12215-9:2018

where

α is the design angle, in degrees, of attack of the foil, which shall not be taken as less than 5°;

A_{CB} is the centreboard foil area average (chord × span outside of hull), in square metres (m^2), in the fully deployed condition, where relevant;

V is the maximum speed of the craft, in knots, in the minimum operation condition, m_{MOC} (see ISO 12217), and where, if this speed is not known, it may be taken as

$$V = 2{,}5 \times L_{WL}^{0{,}5} \times \left(\frac{k_{LD}}{6{,}15} \right)$$

where

$$k_{LD} = \frac{L_{WL}}{\left(\frac{m_{LDC}}{1\,025} \right)^{0{,}33}}$$

but shall not be taken as less than 6,15;

e is the proportion of the total side force carried by the centreboard or dagger board, depending on the contribution from the keel, rudder and canoe body for balancing the force from sails, and which, in the absence of better data, may be taken as 0,6;

M_{RUP} expressed in newton metres (N·m), is the righting moment when the craft beats upwind, which shall be taken as the moment at 30° heel, unless otherwise documented;

h_{CE} expressed in metres (m), is the height of the centre of the area of the nominal sail area, A_S, above the waterline when the craft is upright, as used in F_{KR} of STIX (stability index) according to ISO 12217-2.

F_6 is considered to be exerted at the centre of surface of the part of the centreboard outside of hull (typically 0,5× span), the corresponding bending moment being calculated through multiplying F_6 by the distance between its point of application and the point at which the centreboard exits from the hull (also typically 0,5× span).

The coefficient, 0,075, given in Equation (13) is valid for centreboards with a symmetrical profile but may not be valid for non-symmetrical profiles, which usually achieve greater force.

If the centreboard is not designed to support the forces defined by Equations (13) and (14) at maximum speed V, as defined above, information shall be included in the owner's manual recommending a speed in accordance with centreboard deployment.

7.7.2 Ballasted centreboards

Ballasted centreboards shall also be analysed according to all the relevant load cases specified in Clause 7, with the more demanding requirement being applied.

7.8 Other load cases

7.8.1 General

This part of ISO 12215 should not be regarded as a complete structural design procedure. Load cases 1 to 6 are intended to correspond to those loads which normally govern keel attachment scantlings for most conventional keel configurations. Consequently, it may not be taken that compliance with this part of

© ISO 2012 – All rights reserved
Documents
Document Sharing Hub
Full document details: BS EN ISO 12215-9:2018

ISO 12215 will ensure a satisfactory design in all cases, or that such compliance will absolve the designer or builder of their design responsibilities.

The following sets out general guidance for areas where the designer may wish to exercise judgement beyond the scope of this part of ISO 12215 and offers simple methods for checking the validity of the annexes.

7.8.2 Combined bending and torsion (knockdown case)

For load cases 1 and 2, with large keel rake angle and/or bulb centroid well aft (or, less usually, forward), the CG of the bulb/fin may be located a significant distance aft or forward of the fin or bolt group longitudinal centre at the root. See CAUTION in 7.1.1.

The presence of torque significantly complicates the simplified independent beam approach used to assess floor strength in Annex C (for example, see Table C.1). For users using 3D structural analysis methods, it is recommended that the keel be modelled as a stiff member/framework and the ballast force applied at its correct vertical and fore and aft locations. This is considered to be good practice as point loads should generally be applied well away from the area of interest in finite element analysis (FEA). See 8.2.3.

The effect of a torque on the bolt stress can be easily determined assuming the reference axis is:

— for the torque, T, a vertical line passing through the CG of bolt group areas (see Key item 1 in Figure 2);

— for the bending moment, M, a horizontal line defined by the hinge bearing axis (see Key item 2 in Figure 2 and Key item 1 in Figure D.1), and using equations of the form:

$$\sigma_{\max} = \frac{M \times y_{i\max}}{\sum_{1}^{n} a_i \times y_i^2} \tag{15}$$

$$\tau_{\max} = \frac{T \times r_{i\max}}{\sum_{1}^{n} a_i \times r_i^2} \tag{16}$$

Figure 2 indicates a relationship between the applied torque and bending moment ($M_{1.1}$) for a set of n = 10 bolts (identical area a_i) set up in a uniform “keel-flange” style arrangement.

© ISO 2012 – All rights reserved

Documents
Document Sharing Hub
Full document details: BS EN ISO 12215-9:2018

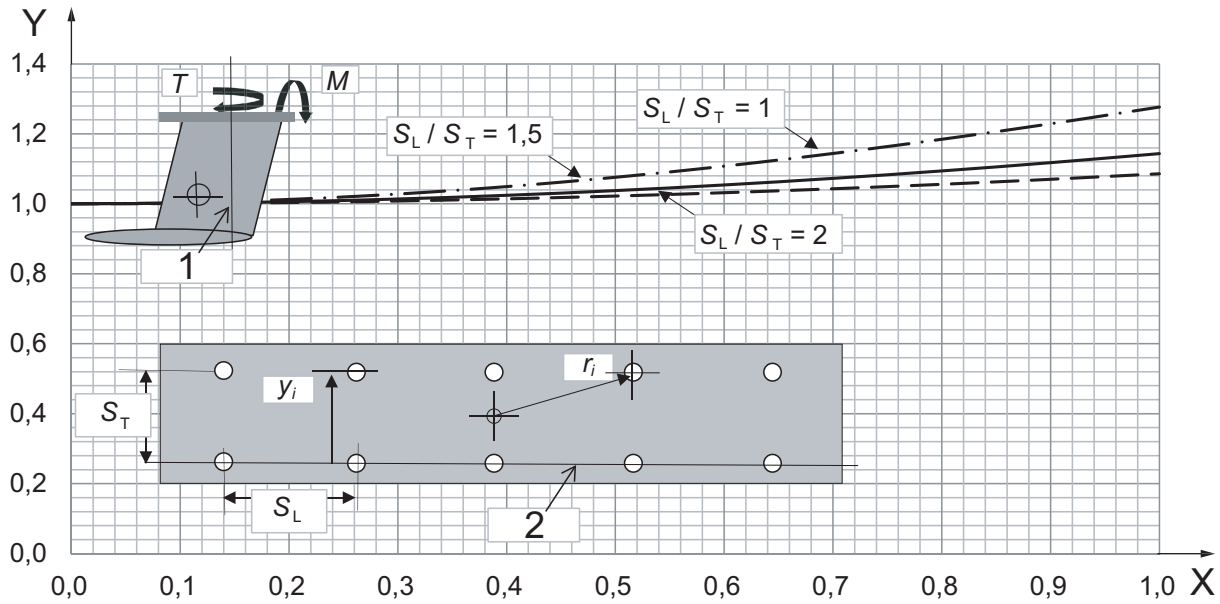

Key

1 torque reference axis (bolt group centroid)

2 bending moment reference axis

X torque transverse bending moment

Y von Mises Stress/stress due to bending moment alone

Figure 2 — Effect of torque on bolt stress under load case 1

It can be seen that the torque increases the von Mises equivalent stress by a factor of, typically (10–20) % for moderate fore and aft offset. The force is the same as for case 1, i.e. $m_{KEEL} \times g$, so that the ratio torque/transverse bending moment is equal to the fore and aft torque offset from the bolt group centroid divided by a, as defined in 7.2). This increase is a function of the ratio S_L/S_T, the longitudinal and transverse spacing of bolts, respectively.

This implies that in cases of moderate torque/moment ratio, the effect may be allowed for by ensuring that the bolt stress compliance factor is not less than about 1,2 when $M_{1.1}$ is acting alone.

It should be noted that the structure in way of keel bolts (see Annex D) only considers a vertical force and the additional transverse bearing force induced by a torque is neglected. This should be borne in mind in cases of minimum compliance with the requirements of Annex D.

7.8.3 Combined bending moment and vertical load (load case 3)

Load case 3 assumes that the craft impacts such that the vertical force passes through its centreline. This induces no bending moment at the keel root and the equations in Table C.1 will be valid. However, it is possible that the craft could be “dropped” onto a seabed/hard standing at an angle, β. This would induce a moment of $m_{LDC} \times S_{KEEL} \times \sin\beta$ (where S_{KEEL} is the keel span). Assuming a (see 7.2) is $0{,}6S_{KEEL}$ and m_{KEEL}/m_{LDC} = 0,5, an angle β greater than about 20° could mean that load case 1 no longer gives the worse transverse bending.

A keel with large wings could also give rise to the same effect at much smaller angles. For users using 3D structural analysis methods, it is recommended that the keel be modelled as a stiff member/framework and that the vertical force (F_3 or m_{LDC}) be applied at its correct vertical and transverse location. It is also possible to combine load cases 1 and 3 (see Table C.1), although this is considered to be of dubious validity as these methods use different floor distribution factors.

© ISO 2012 – All rights reserved

Documents
Document Sharing Hub
Full document details: BS EN ISO 12215-9:2018

As a pragmatic approach, provided the transverse offset (a_V) is less than $m_{KEEL} / m_{LDC} \times a$ (see Figure 3), load case 1 will normally generate the larger transverse moment that will be safe for design/assessment. This neglects the moment due to the vertical force (as per Table C.1) and hence, once again, this pragmatism is undone in cases for designers seeking compliance factors close to unity. A precise definition of a_V is not appropriate here, as this is outside the scope of this part of ISO 12215, but a value of a_V equal to the distance between the centreline of craft to furthest transverse dimension (as in Figure 3) would be a reasonable starting point.

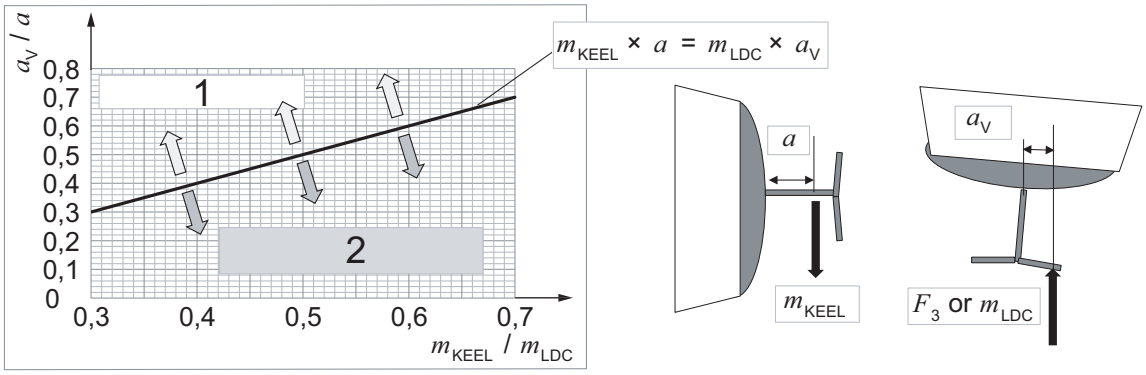

Key

1 area where load case 3 (vertical pounding) governs

2 area where load case 1 governs

Figure 3 — Simplified method for initial assessment of the effect of transverse offset of vertical load

7.8.4 Other combined load cases

As design responsibility is entirely vested in the designer/builder, it is recognized than some users may wish to combine load cases given in this part of ISO 12215 as occurring separately. For example it is entirely possible that a canting keel craft with deployed keel could hit a floating object such that load cases 2 and 4 could be simultaneous. Such cases are outside the scope of this part of ISO 12215, since it may not be reasonable to expect such combined load cases to be used with the allowable stresses given in Clause 5.

8 Computational methods

8.1 General

This part of ISO 12215 recognizes that many structural components within its scope are best analysed using 3D numerical procedures (e.g. box keels, girder and floor grillage frames). In order not to stifle innovation, it has been written in terms of defined load cases and associated stress factors/factors of safety. The stress assessment is left to the discretion of the designer, subject to the criteria given in 8.2.

However, in order to assist designers of conventional keel structures, Annexes B to F contain a series of simplified strength assessment methods which are considered to be “established practices” and which have been found suitable for a limited range of conventional keel configurations.

8.2 General guidance for assessment by 3D numerical procedures

IMPORTANT — It is considered prudent design practice to compare scantlings derived from this subclause with those derived from 8.3. A technical explanation shall be provided in cases where these 3D numerical procedures give significantly lower scantlings than the assessment specified in 8.3.

© ISO 2012 – All rights reserved

Documents
Document Sharing Hub
Full document details: BS EN ISO 12215-9:2018

8.2.1 3D numerical procedures

The term “3D numerical procedures” is intended to indicate any structural assessment method that is not limited to simple geometries. In most cases, the term will correspond to finite element analysis.

8.2.2 Material properties

Irrespective of the numerical method, the mechanical properties of any material shall be taken as stated in Clause 5.

8.2.3 Boundary assumptions

No explicit boundary assumptions are specified within this part of ISO 12215. The analyst shall ensure that the critical area to be analysed is located well away from the model boundaries.

8.2.4 Load application

Wherever possible, loads should be applied as distributed loads. Where forces or moments are applied as concentrated nodal loads, these shall be located well away from the critical area to be analysed.

8.2.5 Model idealization

Models may be of beam-element, plate or brick type. Where beam elements are adopted, effective plate dimensions may be obtained from ISO 12215-5 or from published effective breadth equations. Closed sections having significant torsional stiffness should have this parameter calculated using accepted methods, e.g. Bredt–Batho theory.

When using plate-based models, sufficient elements shall be used between frames to replicate local bending effects.

Unless a non-linear analysis is used, analysts should ensure that buckling modes of failure are precluded. This can normally be accounted for by respecting the allowable slenderness ratios for beams and flanges as outlined in ISO 12215-5.

Non-linear analysis is required for accurate analysis of bolted structures using contact algorithms.

8.3 Assessment by strength of materials/non-computational-based methods

The methods outlined in Annexes C and D contain a series of standard beam/plate-theory-based methods and other simplified procedures. Many of these derive from established practice and hence have been validated by long-term use. In general, the methods are considered to be conservative. The methods will work well for one- and two-dimensional structures of isotropic material construction.

9 Compliance

Compliance with this part of ISO 12215 may be claimed if the conditions of a) or, alternatively, b) are met.

a) The user shall meet the requirements of Clauses 5 to 7 and Annex A, as well as any of the “established practices” given in Annexes B to F that are relevant. However, where one of Annexes B to F or a part thereof is not used, the user shall justify and explain the choice of the alternative scantling assessment methods that have been used, in accordance with Clause 8, to meet these requirements.

b) The user shall meet the requirements of Clauses 5 to 7, Annex A *and* Annexes B to F (“established practice”), *in their entirety*, in which case no further justification or explanation is required, provided the annexes have been fully complied with.

© ISO 2012 – All rights reserved
Documents
Document Sharing Hub
Full document details: BS EN ISO 12215-9:2018

If a) is met, the use of Annexes B to F is not fully required for compliance with this part of ISO 12215. However, if alternative b) is chosen, those annexes become proof of compliance.

— Annex A, an application declaration by the user of how this part of ISO 12215 has been used, is normative, and needs to be completed for compliance in the case of either a) or b);

— Annex B shall be used for metals and connection bolts material choice, and gives “established practice” for bolt tightening and keel welding;

— Annex C gives “established practice” for structural arrangements in respect of ballast keel;

— Annex D gives “established practice” for calculating keel fin strength (fixed or canting) and fixed ballast keel connected by bolts;

— Annex E gives information on the geometric properties of typical appendage shapes (second moment, section modulus, etc.);

— Annex F gives information on simplified fatigue stress assessment.

NOTE 1 The scantling requirements of this part of ISO 12215 are considered as corresponding to the minimum strength requirements for sailing craft operated in a safe and responsible manner, and with due cognisance of the prevailing conditions. No sailing craft can be designed to survive the most extreme load cases, such as very severe grounding, collisions or extreme sea states. In this context, *minimum strength* implies that the craft will be able to cope with heavy seas and moderate impact loads with minimal structural damage. Builders and designers are strongly advised against systematically seeking minimum compliance on all components.

NOTE 2 Scantlings derived from this part of ISO 12215 are primarily intended to apply to recreational craft, including charter vessels.

© ISO 2012 – All rights reserved

Documents
Document Sharing Hub
Full document details: BS EN ISO 12215-9:2018