BS EN ISO 12217-1:2025

BSI Standards Publication

Small craft — Stability and buoyancy assessment and categorization

Part 1: Non-sailing boats of hull length greater than or equal to 6 m

Documents
Document Sharing Hub

Full document details: BS EN ISO 12217-1:2025

National foreword

This British Standard is the UK implementation of EN ISO 12217-1:2025. It is identical to ISO 12217-1:2022. It supersedes BS EN ISO 12217-1:2017, which is withdrawn.

The UK participation in its preparation was entrusted to Technical Committee GME/33, Small craft.

A list of organizations represented on this committee can be obtained on request to its committee manager.

Contractual and legal considerations

This publication has been prepared in good faith, however no representation, warranty, assurance or undertaking (express or implied) is or will be made, and no responsibility or liability is or will be accepted by BSI in relation to the adequacy, accuracy, completeness or reasonableness of this publication. All and any such responsibility and liability is expressly disclaimed to the full extent permitted by the law.

This publication is provided as is, and is to be used at the recipient's own risk.

The recipient is advised to consider seeking professional guidance with respect to its use of this publication.

This publication is not intended to constitute a contract. Users are responsible for its correct application.

© The British Standards Institution 2025
Published by BSI Standards Limited 2025

ISBN 978 0 539 05897 0

ICS 47.080

Compliance with a British Standard cannot confer immunity from legal obligations.

This British Standard was published under the authority of the Standards Policy and Strategy Committee on 31 October 2025.

Amendments/corrigenda issued since publication

Date	Text affected

Documents
Document Sharing Hub

Full document details: BS EN ISO 12217-1:2025

EUROPEAN STANDARD

NORME EUROPÉENNE

EUROPÄISCHE NORM

EN ISO 12217-1

October 2025

ICS 47.080

Supersedes EN ISO 12217-1:2017

English Version

Small craft - Stability and buoyancy assessment and categorization - Part 1: Non-sailing boats of hull length greater than or equal to 6 m (ISO 12217-1:2022)

Petits navires - Évaluation et catégorisation de la stabilité et de la flottabilité - Partie 1: Bateaux à propulsion non vélique d'une longueur de coque supérieure ou égale à 6 m (ISO 12217-1:2022)

Kleine Wasserfahrzeuge - Stabilitäts- und Auftriebsbewertung und Kategorisierung - Teil 1: Nicht-Segelboote ab 6 m Rumpflänge (ISO 12217-1:2022)

This European Standard was approved by CEN on 15 October 2025.

CEN members are bound to comply with the CEN/CENELEC Internal Regulations which stipulate the conditions for giving this European Standard the status of a national standard without any alteration. Up-to-date lists and bibliographical references concerning such national standards may be obtained on application to the CEN-CENELEC Management Centre or to any CEN member.

This European Standard exists in three official versions (English, French, German). A version in any other language made by translation under the responsibility of a CEN member into its own language and notified to the CEN-CENELEC Management Centre has the same status as the official versions.

CEN members are the national standards bodies of Austria, Belgium, Bulgaria, Croatia, Cyprus, Czech Republic, Denmark, Estonia, Finland, France, Germany, Greece, Hungary, Iceland, Ireland, Italy, Latvia, Lithuania, Luxembourg, Malta, Netherlands, Norway, Poland, Portugal, Republic of North Macedonia, Romania, Serbia, Slovakia, Slovenia, Spain, Sweden, Switzerland, Türkiye and United Kingdom.

EUROPEAN COMMITTEE FOR STANDARDIZATION
COMITÉ EUROPÉEN DE NORMALISATION
EUROPÄISCHES KOMITEE FÜR NORMUNG

CEN-CENELEC Management Centre: Rue de la Science 23, B-1040 Brussels

© 2025 CEN All rights of exploitation in any form and by any means reserved worldwide for CEN national Members.

Ref. No. EN ISO 12217-1:2025 E

Documents
Document Sharing Hub

Full document details: BS EN ISO 12217-1:2025

European foreword

This document (EN ISO 12217-1:2025) has been prepared by Technical Committee ISO/TC 188 "Small craft" in collaboration with Technical Committee CEN/TC 464 “Small Craft” the secretariat of which is held by SIS.

This European Standard shall be given the status of a national standard, either by publication of an identical text or by endorsement, at the latest by April 2026, and conflicting national standards shall be withdrawn at the latest by April 2026.

Attention is drawn to the possibility that some of the elements of this document may be the subject of patent rights. CEN shall not be held responsible for identifying any or all such patent rights.

This document supersedes EN ISO 12217-1:2017.

Any feedback and questions on this document should be directed to the users’ national standards body/national committee. A complete listing of these bodies can be found on the CEN website.

According to the CEN-CENELEC Internal Regulations, the national standards organizations of the following countries are bound to implement this European Standard: Austria, Belgium, Bulgaria, Croatia, Cyprus, Czech Republic, Denmark, Estonia, Finland, France, Germany, Greece, Hungary, Iceland, Ireland, Italy, Latvia, Lithuania, Luxembourg, Malta, Netherlands, Norway, Poland, Portugal, Republic of North Macedonia, Romania, Serbia, Slovakia, Slovenia, Spain, Sweden, Switzerland, Türkiye and the United Kingdom.

Endorsement notice

The text of ISO 12217-1:2022 has been approved by CEN as EN ISO 12217-1:2025 without any modification.

Documents
Document Sharing Hub

Full document details: BS EN ISO 12217-1:2025

Contents

Page

Foreword ... **v**

Introduction ... **vi**

1 Scope ... **1**

2 Normative references ... **2**

3 Terms and definitions ... **2**
3.1 Primary ... 2
3.2 Downflooding ... 4
3.3 Dimensions, areas and angles ... 5
3.4 Condition, mass and volume ... 7
3.5 Other terms and definitions ... 9

4 Symbols ... **12**

5 Procedure ... **13**
5.1 Maximum load ... 13
5.2 Sailing or non-sailing ... 13
5.3 Tests and calculations to be applied ... 13
5.4 Variation in input parameters ... 14

6 Tests, calculations and requirements ... **14**
6.1 Downflooding ... 14
6.1.1 Downflooding openings ... 15
6.1.2 Downflooding height ... 17
6.1.3 Downflooding angle ... 19
6.2 Offset-load test ... 20
6.2.1 Objective ... 20
6.2.2 Test ... 20
6.2.3 Requirements ... 20
6.3 Resistance to waves and wind ... 21
6.3.1 General ... 21
6.3.2 Rolling in beam waves and wind ... 21
6.3.3 Resistance to waves ... 22
6.4 Heel due to wind action ... 23
6.4.1 General ... 23
6.4.2 Calculation ... 23
6.4.3 Requirement ... 23
6.5 Recess size ... 23
6.5.1 Application ... 23
6.5.2 Simplified methods ... 24
6.5.3 Direct calculation method ... 25
6.5.4 Design category C boats using option 6 ... 26
6.6 Habitable multihull boats ... 26
6.7 Motor sailers ... 27
6.7.1 General ... 27
6.7.2 Requirement ... 27
6.8 Flotation requirements ... 27
6.9 Detection and removal of water ... 28

7 Application ... **28**
7.1 Deciding the design category ... 28
7.2 Meaning of the design categories ... 28

Annex A (normative) **Full method for required downflooding height** ... **30**

Annex B (normative) **Method for offset-load test** ... **32**

Annex C (normative) **Methods for calculating downflooding angle** ... **40**

AVA Documents
Document Sharing Hub

© ISO 2022 – All rights reserved

Full document details: BS EN ISO 12217-1:2025

Annex D (normative) **Method for measuring freeboard margin** **42**
Annex E (normative) **Determining the curve of righting moments** **44**
Annex F (normative) **Method for level flotation test** **47**
Annex G (normative) **Flotation material and elements** **52**
Annex H (normative) **Information for the craft's owner's manual** **54**
Annex I (informative) **Summary of requirements** **56**
Annex J (informative) **Worksheets** **58**
Annex K (informative) **Illustration of recess retention level** **75**
Bibliography **76**

© ISO 2022 – All rights reserved
Documents
Document Sharing Hub
Full document details: BS EN ISO 12217-1:2025

Foreword

ISO (the International Organization for Standardization) is a worldwide federation of national standards bodies (ISO member bodies). The work of preparing International Standards is normally carried out through ISO technical committees. Each member body interested in a subject for which a technical committee has been established has the right to be represented on that committee. International organizations, governmental and non-governmental, in liaison with ISO, also take part in the work. ISO collaborates closely with the International Electrotechnical Commission (IEC) on all matters of electrotechnical standardization.

The procedures used to develop this document and those intended for its further maintenance are described in the ISO/IEC Directives, Part 1. In particular, the different approval criteria needed for the different types of ISO documents should be noted. This document was drafted in accordance with the editorial rules of the ISO/IEC Directives, Part 2 (see www.iso.org/directives).

Attention is drawn to the possibility that some of the elements of this document may be the subject of patent rights. ISO shall not be held responsible for identifying any or all such patent rights. Details of any patent rights identified during the development of the document will be in the Introduction and/or on the ISO list of patent declarations received (see www.iso.org/patents).

Any trade name used in this document is information given for the convenience of users and does not constitute an endorsement.

For an explanation of the voluntary nature of standards, the meaning of ISO specific terms and expressions related to conformity assessment, as well as information about ISO's adherence to the World Trade Organization (WTO) principles in the Technical Barriers to Trade (TBT), see www.iso.org/iso/foreword.html.

This document was prepared by Technical Committee ISO/TC 188, *Small craft*, in collaboration with the European Committee for Standardization (CEN) Technical Committee CEN/TC 464, *Small Craft*, in accordance with the Agreement on technical cooperation between ISO and CEN (Vienna Agreement).

This fourth edition cancels and replaces the third edition (ISO 12217-1:2015), of which it constitutes a minor revision. The main changes are as follows:

— the Normative references have been updated;

— the "allowance for the maximum mass of optional equipment and fittings not included in the manufacturer's basic outfit" has been moved from 3.4.4 (maximum load) to 3.4.5 (maximum load condition);

— in Clause H.1, the first paragraph has been slightly reworded as a Note, so as to clearly make an informative reference to ISO 10240, which has been moved from Clause 2 to the Bibliography;

— in Annex J, the calculation worksheet No. 1 has been corrected to reflect the changes in 3.4.4 and 3.4.5;

— minor editorial changes throughout the document.

A list of all parts in the ISO 12217 series can be found on the ISO website.

Any feedback or questions on this document should be directed to the user's national standards body. A complete listing of these bodies can be found at www.iso.org/members.html.

© ISO 2022 – All rights reserved

Documents
Document Sharing Hub
Full document details: BS EN ISO 12217-1:2025

Introduction

This document enables the determination of the limiting environmental conditions for which an individual boat has been designed.

It enables the boat to be assigned to a design category appropriate to its design and maximum load. The design categories used align with those in the Recreational Craft Directive of the European Union, EU Directive 2013/53/EU.

The design category given in respect of stability and buoyancy is that for which the boat satisfies all the requirements according to 5.3, as summarized in Annex I.

© ISO 2022 – All rights reserved
Documents
Document Sharing Hub
Full document details: BS EN ISO 12217-1:2025

Small craft — Stability and buoyancy assessment and categorization —

Part 1:
Non-sailing boats of hull length greater than or equal to 6 m

CAUTION — Compliance with this document does not guarantee total safety or total freedom of risk from capsize or sinking.

IMPORTANT — The electronic file of this document contains colours which are considered to be useful for the correct understanding of the document. Users should therefore consider printing this document using a colour printer.

1 Scope

This document specifies methods for evaluating the stability and buoyancy of intact (i.e. undamaged) boats. The flotation characteristics of boats susceptible to swamping are also encompassed.

The evaluation of stability and buoyancy properties using this document will enable the boat to be assigned to a design category (A, B, C or D) appropriate to its design and maximum total load.

This document is principally applicable to boats propelled by human or mechanical power of 6 m up to 24 m hull length. However, it can also be applied to boats of under 6 m if they do not attain the desired design category specified in ISO 12217-3 and they are decked and have quick-draining recesses which comply with ISO 11812.

In relation to habitable multihulls, this document includes assessment of susceptibility to inversion, definition of viable means of escape and requirements for inverted flotation.

This document excludes:

— inflatable and rigid-inflatable boats covered by the ISO 6185 series, except for references made in the ISO 6185 series to specific clauses of the ISO 12217 series;

— personal watercraft covered by ISO 13590 and other similar powered craft;

— gondolas and pedalos;

— sailing surfboards;

— surfboards, including powered surfboards;

— hydrofoils and hovercraft when not operating in the displacement mode; and

— submersibles.

NOTE Displacement mode means that the boat is only supported by hydrostatic forces.

It does not include or evaluate the effects on stability of towing, fishing, dredging or lifting operations, which need to be separately considered if appropriate.

© ISO 2022 – All rights reserved

Documents
Document Sharing Hub
Full document details: BS EN ISO 12217-1:2025

2 Normative references

The following documents are referred to in the text in such a way that some or all of their content constitutes requirements of this document. For dated references, only the edition cited applies. For undated references, the latest edition of the referenced document (including any amendments) applies.

ISO 2896:2001, *Rigid cellular plastics — Determination of water absorption*

ISO 3864-1:2011, *Graphical symbols — Safety colours and safety signs — Part 1: Design principles for safety signs and safety markings*

ISO 6185-4:2011, *Inflatable boats — Part 4: Boats with a hull length of between 8 m and 24 m with a motor power rating of 15 kW and greater*

ISO 8666:2020, *Small craft — Principal data*

ISO 9093, *Small craft — Seacocks and through-hull fittings*

ISO 11812, *Small craft — Watertight or quick-draining recesses and cockpits*

ISO 12216, *Small craft — Windows, portlights, hatches, deadlights and doors — Strength and watertightness requirements*

ISO 12217-2:2022, *Small craft — Stability and buoyancy assessment and categorization — Part 2: Sailing boats of hull length greater than or equal to 6 m*

ISO 14946:2021, *Small craft — Maximum load capacity*

ISO 15083, *Small craft — Bilge-pumping systems*

ISO 15085, *Small craft — Man-overboard prevention and recovery*

3 Terms and definitions

For the purposes of this document, the following terms and definitions apply.

ISO and IEC maintain terminology databases for use in standardization at the following addresses:

— ISO Online browsing platform: available at https://www.iso.org/obp

— IEC Electropedia: available at https://www.electropedia.org/

NOTE The meanings of certain symbols used in the definitions are given in Clause 4.

3.1 Primary

3.1.1
design category
description of the sea and wind conditions for which a boat is assessed to be suitable

Note 1 to entry: See also 7.2.

3.1.2
non-sailing boat
boat for which the primary means of propulsion is other than by wind power, having *reference sail area* (3.3.8) $A_S < 0{,}07(m_{LDC})^{2/3}$, where m_{LDC} is the mass of the boat in the maximum load condition, expressed in kilograms

© ISO 2022 – All rights reserved
Documents
Document Sharing Hub
Full document details: BS EN ISO 12217-1:2025

3.1.3
recess
volume open to the air that might retain water within the range of loading conditions and corresponding trims

EXAMPLE Cockpits, wells, open volumes or areas bounded by bulwarks or coamings.

Note 1 to entry: Cabins, shelters or lockers provided with closures according to the requirements of ISO 12216 are not recesses.

Note 2 to entry: Cockpits that are open aft to the sea are considered to be recesses. Flush decks without bulwarks or coamings are not recesses.

3.1.4
quick-draining recess
recess fulfilling all the requirements of ISO 11812 for "quick-draining cockpits and recesses"

Note 1 to entry: According to its characteristics, a cockpit may be considered to be quick-draining for one design category, but not for a higher category.

3.1.5
watertight recess
recess fulfilling all the requirements of ISO 11812 for "watertight cockpits and recesses"

Note 1 to entry: This term only implies requirements in respect of watertightness and sill heights, but not those for drainage.

3.1.6
fully enclosed boat
boat in which the horizontal projection of the sheerline area comprises any combination of

— watertight deck and superstructure, and/or

— quick-draining recesses complying with ISO 11812, and/or

— watertight recesses complying with ISO 11812 with a combined volume of less than $(L_H\ B_H\ F_M)/40$, and

all closing appliances have their degree of watertightness in accordance with ISO 12216

Note 1 to entry: The size of recesses permitted for boats of design category A, B or some boats of design category C is restricted by the requirements of 6.5.

3.1.7
partially protected boat
boat which does not fulfil the definition of a fully-enclosed boat and in which the plan projected area of decking, cabins, shelters, outboard engine wells or other rigid covers which are watertight from above according to ISO 12216 and which immediately shed water directly overboard (i.e. not via drains) and

— comprises at least one-third of the plan projected area of the sheerline, and

— includes all the area within $L_H/3$ from the bow, and

— includes at least 100 mm inboard from the sheerline,

except that the area of any watertight recesses with a total volume of less than $(L_H\ B_H\ F_M)/40$ might shed water via drains

Note 1 to entry: This is illustrated in Figure 1.

Note 2 to entry: Outboard engine wells are considered to provide a covering suitable for this purpose.

© ISO 2022 – All rights reserved

Documents
Document Sharing Hub
Full document details: BS EN ISO 12217-1:2025

Dimensions in millimetres

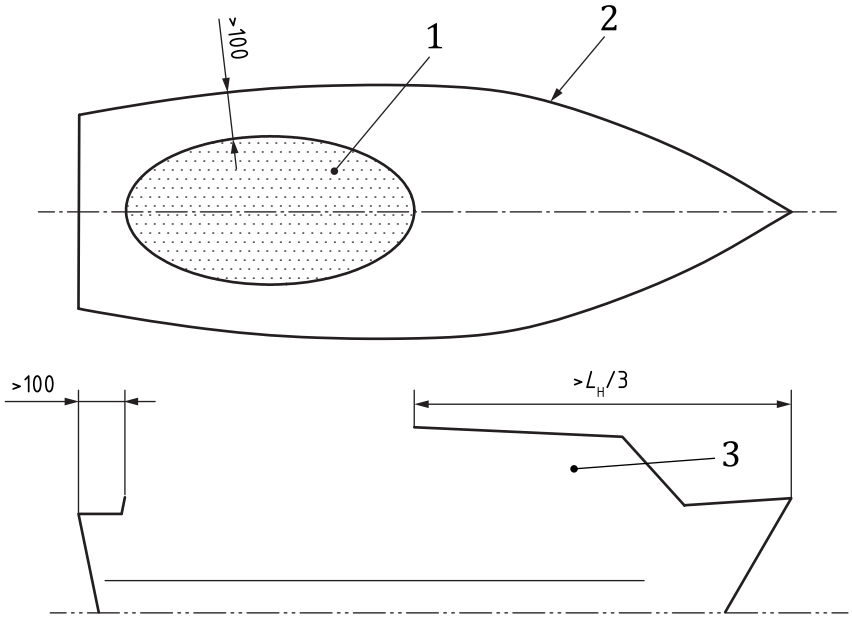

Key

1 recess area open from above (less than two-thirds of total sheerline area)

2 sheerline

3 open shelter or enclosed cabin

Figure 1 — Partially protected boat

3.1.8
habitable boat
boat having a fully enclosed cabin with rigid roof fitted with one or more bunks, benches, pipecots, hammocks or similar locations that can be used for sleeping when the boat is under way

Note 1 to entry: A boat is considered to be "habitable" if a fabric closure is used instead of a rigid door, or the cabin has fabric sides.

Note 2 to entry: The following are not considered to render a boat "habitable":

— a cockpit tent, or

— an open-sided cuddy intended to provide limited protection from spray, provided it is not fitted with fabric closures all round.

Note 3 to entry: Locations used for sleeping have minimum dimensions of 1,5 m diagonal length, 0,4 m width at the widest point, and with a minimum headroom of 0,4 m over the length. The cabin sole and compartments designated by the builder to be used exclusively for storage and referenced in the owner's manual are not included.

3.2 Downflooding

3.2.1
downflooding opening
opening in the hull or deck (including the edge of a recess) that might admit water into the interior or bilge of a boat, or a recess, apart from those excluded in 6.1.1.6

© ISO 2022 – All rights reserved
Documents
Document Sharing Hub
Full document details: BS EN ISO 12217-1:2025

3.2.2
downflooding angle
ϕ_D
angle of heel at which downflooding openings (apart from those excluded in 6.1.1.6) become immersed, when the boat is in calm water and in the appropriate loading condition at design trim

Note 1 to entry: Where openings are not symmetrical about the centreline of the boat, the case resulting in the smallest angle is used.

Note 2 to entry: The following are specifically considered:

— ϕ_D is the downflooding angle to any downflooding opening

— ϕ_{DA} is the angle of heel at which openings which are not marked "KEEP SHUT WHEN UNDER WAY" having a combined total area, expressed in square centimetres (cm^2), greater than the number represented by $1{,}2 L_H B_H F_M$ first become immersed;

Note 3 to entry: Downflooding angle is expressed in degrees.

3.2.3
downflooding height
h_D
smallest height above the waterline to any downflooding opening, apart from those excluded in 6.1.1.6, when the boat is upright in calm water and in the maximum load condition, measured to the critical downflooding point which might be within pipes or ducts inside the hull

Note 1 to entry: Downflooding height is expressed in metres.

Note 2 to entry: See Figure D.1 c).

3.3 Dimensions, areas and angles

3.3.1
length of hull
L_H
length of the hull measured according to ISO 8666

Note 1 to entry: Length of hull is expressed in metres.

3.3.2
length waterline
L_{WL}
waterline length measured according to ISO 8666 when the boat is upright in calm water, in the appropriate loading condition and at design trim

Note 1 to entry: For multihull boats, L_{WL} relates to that of the longest individual hull.

Note 2 to entry: Length waterline is expressed in metres.

3.3.3
beam of hull
B_H
maximum beam of the hull using the method of ISO 8666; for catamaran and trimaran boats, maximum beam across the outer hulls

Note 1 to entry: Beam of hull is expressed in metres.

© ISO 2022 – All rights reserved

Documents
Document Sharing Hub
Full document details: BS EN ISO 12217-1:2025

3.3.4
beam waterline
B_{WL}
greatest beam measured according to ISO 8666 at the waterline in calm water, which for multihull boats is the sum of the maximum waterline beams of all hulls, the boat being upright, in the appropriate loading condition and at design trim

Note 1 to entry: Beam waterline is expressed in metres.

3.3.5
freeboard amidships
F_M
distance of the sheerline or deck above the waterline at $L_{WL}/2$ measured according to ISO 8666, the boat being upright, in the appropriate loading condition and at design trim

Note 1 to entry: Freeboard amidships is expressed in metres.

Note 2 to entry: Where no loading condition is specified, maximum load condition should be assumed.

3.3.6
draught of canoe body
T_C
draught of the main buoyant part of the hull(s) below the waterline, as defined in ISO 8666, the boat being upright in the appropriate loading condition and at design trim

Note 1 to entry: Draught of canoe body excludes appendages such as rudders or skegs and is expressed in metres.

3.3.7
windage area
A_{LV}
projected profile area of hull, superstructures, deckhouses, outboard motors and spars above the waterline at the appropriate loading condition, the boat being upright

Note 1 to entry: Canopies and screens that can be erected when under way in bad weather are included, e.g. cockpit dodgers, pram hoods.

Note 2 to entry: Windage area is expressed in square metres.

3.3.8
reference sail area
A_S
actual profile area of sails set abaft a mast, plus the maximum profile areas of all masts, plus reference triangle area(s) forward of each mast as defined in ISO 8666

Note 1 to entry: Sail area is expressed in square metres.

3.3.9
angle of vanishing stability
ϕ_V
angle of heel nearest the upright (other than upright) in the appropriate loading condition at which the transverse stability righting moment is zero

Note 1 to entry: This is determined assuming that there is no offset load, and that all potential downflooding openings are considered to be watertight.

Note 2 to entry: Where a boat has recesses which are not quick-draining, ϕ_V is to be taken as the downflooding angle to these recesses, unless the loss of buoyancy due to such recesses is fully accounted for in determining ϕ_V.

Note 3 to entry: Angle of vanishing stability is expressed in degrees.

© ISO 2022 – All rights reserved
Documents
Document Sharing Hub
Full document details: BS EN ISO 12217-1:2025

3.4 Condition, mass and volume

3.4.1
empty craft condition
empty boat including fittings and equipment as listed below but excluding all optional equipment and fittings not included in the manufacturer's basic outfit:

a) structure: comprising all the structural parts, including any fixed ballast keel and/or drop keel/centreboard/daggerboard(s) and rudder(s);

b) ballast: any fixed ballast installed;

c) internal structure and accommodation: bulkheads and partitions, insulation, lining, built-in furniture, flotation material, windows, hatches and doors, permanently installed mattresses and upholstery materials;

d) permanently installed engine(s) and fuel system: comprising inboard engine(s), including all supplies and controls as needed for their operation, permanently installed fuel systems, including tanks;

e) fluids in permanently installed systems: residual working fluids as needed for their operation (see examples below), but excluding contents of fluid ballast systems and tanks, and main storage tanks which are included in maximum load;

EXAMPLE Fluids in hot or cold water, fuel, lubricating or hydraulic oil systems.

f) internal equipment, including:

— all items of equipment permanently attached to the craft, e.g. tanks, toilet system(s), water transfer equipment;

— bilge pumping system(s), cooking and heating devices, cooling equipment, ventilation system(s);

— electrical installation and equipment, including permanently installed batteries mounted in the position intended by the builder;

— fixed navigational and electronic equipment;

— fixed firefighting equipment, where fitted;

g) external equipment, including:

— all permanently attached standard or specified deck fittings, e.g. guardrails, pulpits and pushpits, bowsprits and their attachments, bathing platforms, boarding ladders, steering equipment, winches, sprayhood(s);

— awning(s), cockpit tables, gratings, signal mast(s), where fitted;

— mast(s), boom(s), standing and running rigging, in the stowed position ready for use; all standing and running rigging in place

Note 1 to entry: The mass in the empty craft condition is denoted by m_{EC} and is expressed in kilograms.

3.4.2
light craft condition
empty craft condition plus *standard equipment* (3.5.12) plus removable ballast (whether solid or liquid) when supplied and/or intended by the manufacturer to be carried when the boat is afloat, with elements positioned as follows:

a) where provision is made for propulsion by outboard engine(s) of more than 3 kW, the heaviest engine(s) recommended for the boat by the manufacturer is(are) mounted in the working position(s);

© ISO 2022 – All rights reserved

Documents
Document Sharing Hub
Full document details: BS EN ISO 12217-1:2025

b) where batteries are fitted, they are mounted in the position intended by the builder, and if there is no specific stowage provided for batteries, the mass of one battery for each engine over 7 kW is allowed for, and located within 1,0 m of the engine location;

c) all upwind sails supplied or recommended by the builder, onboard and rigged ready for use, but not hoisted, e.g. mainsail on boom, roller furling sails furled, hanked foresails on stay stowed on foredeck

Note 1 to entry: For the minimum mass of outboard engines and batteries, refer to Tables F.1 and F.2.

Note 2 to entry: The mass in the light craft condition is denoted by m_{LC} and is expressed in kilograms.

3.4.3
minimum operating condition
boat in the light craft condition with the following additions:

a) mass to represent the crew, positioned on the centreline at the highest control position that can accommodate them, of:

— 75 kg where $L_H \leq 8$ m,

— 150 kg where 8 m < $L_H \leq 16$ m,

— 225 kg where 16 m < L_H < 24 m;

b) non-edible stores and equipment normally carried on the boat and not included in the manufacturer's list of standard equipment

EXAMPLE Loose internal equipment and tools, spare parts, dishes, kitchenware and cutlery, additional anchors, dinghy and outboard if carried aboard.

Note 1 to entry: Liquids in main storage tanks (e.g. fuel, drinking water, black and grey water, live wells, bait tanks, etc.) are excluded.

Note 2 to entry: Water ballast in tanks which are symmetrical about the centreline, and which are intended by the builder to be used for variable asymmetric ballasting while under way, is excluded.

Note 3 to entry: The mass in the minimum operating condition is denoted by m_{MO} and is expressed in kilograms.

3.4.4
maximum load
load which the boat is designed to carry in addition to the light craft condition, comprising:

— the crew limit at 75 kg each;

— the personal effects of the crew;

— stores and cargo (if any), dry provisions, consumable liquids;

— contents of all permanently installed storage tanks filled to 95 % of their maximum capacity, including fuel, drinking water, black water, grey water, lubricating and hydraulic oil, bait tanks and/or live wells; plus ballast water at 100 % capacity;

— consumable liquids in portable tanks (drinking water, fuel) filled to 95 % of the maximum capacity;

— dinghy or other small craft intended to be carried aboard, and any outboard motor associated with them;

— liferaft(s) if carried in excess of the minimum required in essential safety equipment;

— non-edible stores and equipment normally carried on the boat and not included in the manufacturer's list of standard equipment, e.g. loose internal equipment and tools, spare parts, additional anchors, dinghy and outboard if carried aboard;

© ISO 2022 – All rights reserved
Documents
Document Sharing Hub
Full document details: BS EN ISO 12217-1:2025

Note 1 to entry: Liferafts are not included in essential safety equipment for design categories C and D.

Note 2 to entry: As a guide, not less than 20 kg per person should be allowed for personal effects on habitable boats.

Note 3 to entry: As a guide, the mass of yachting liferafts varies from approximately 12 + 2CL (kg) to double this, according to specification.

Note 4 to entry: The mass of maximum load is denoted by m_{ML} and is expressed in kilograms.

3.4.5
maximum load condition
boat in the light craft condition with the maximum load added and an allowance for the maximum mass of optional equipment and fittings not included in the manufacturer's basic outfit so as to produce the design trim, the crew being in positions typically used when the boat is under way (e.g. within the cabin, cockpit, deckhouse or wheelhouse) such positions being designated by the builder

Note 1 to entry: The mass in the maximum load condition is denoted by m_{LDC} and is expressed in kilograms.

3.4.6
loaded arrival condition
boat in the maximum load condition minus 85 % of the maximum capacity of fixed or portable storage tanks for fuel, oils and drinking water, and minus 90 % of edible stores, but including the worst combination of optional fittings or equipment with respect to stability

Note 1 to entry: In this condition, tanks have 10 % of their maximum capacity remaining.

Note 2 to entry: The mass in the loaded arrival condition is denoted by m_{LA} and is expressed in kilograms.

3.4.7
displacement volume
V_D
volume of displacement of the boat that corresponds to the appropriate loading condition, taking the density of water as 1 025 kg/m^3

Note 1 to entry: Displacement volume is expressed in cubic metres.

3.5 Other terms and definitions

3.5.1
calculation wind speed
v_W
wind speed to be used for calculations

Note 1 to entry: Calculation wind speed is expressed in metres per second.

3.5.2
crew
collective description of all persons onboard a boat

3.5.3
crew limit
CL
maximum number of persons (with a mass of 75 kg each) used when assessing the design category

© ISO 2022 – All rights reserved

Documents
Document Sharing Hub
Full document details: BS EN ISO 12217-1:2025

3.5.4
design trim
longitudinal attitude of a boat when upright, with crew, fluids, stores and equipment in the positions designated by the designer or builder

Note 1 to entry: Crew are assumed to be in positions designated by the builder. In the absence of builder's instructions, crew and gear are assumed to be positioned in a manner most likely to provide a favourable test result, provided that such positions are consistent with the proper operation of the boat, and that crew are assumed to be either standing at designated positions fitted with handholds, or seated.

3.5.5
essential safety equipment
loose equipment considered essential to the safe operation of the boat, which may include distress flares and rockets, lifebuoy with light and battery, first aid box, lifejackets, safety harnesses and lines, portable firefighting equipment, flashlight, binoculars, radio (e.g. VHF), ball and cone visual signals, charts, navigational publications and, for design categories A and B, liferaft(s) sufficient for the crew limit in the corresponding design category

Note 1 to entry: Quantities carried may vary according to the size of boat, design category and crew limit.

Note 2 to entry: As a guide, the mass allowed for essential safety equipment but excluding any liferaft(s) should not be less than $3L_H$ (kg).

Note 3 to entry: The mass of yachting liferafts varies from approximately 12 + 2CL (kg) to double this, according to specification.

Note 4 to entry: Liferafts are not considered to be essential safety equipment in design categories C and D.

3.5.6
flotation element
element which provides buoyancy to the boat and thus influences its flotation characteristics

3.5.6.1
air tank
tank made of hull construction material, and integral with hull or deck structure

3.5.6.2
air container
container made of stiff material, and not integral with the hull or deck structure

3.5.6.3
low density material
material with a specific gravity of less than 1,0 primarily incorporated into the boat to enhance the buoyancy when swamped

3.5.6.4
rib collar
heavy duty tubular collar fitted around the periphery of the boat and always intended to be inflated whenever the boat is being used

3.5.6.5
inflated bag
bag made of flexible material, not integral with hull or deck, accessible for visual inspection and intended always to be inflated when the boat is being used

Note 1 to entry: Bags intended to be inflated automatically when immersed (e.g. at the masthead as a means to prevent inversion) are not regarded as flotation elements.

© ISO 2022 – All rights reserved
Documents
Document Sharing Hub
Full document details: BS EN ISO 12217-1:2025

3.5.7
inclining experiment
method by which the vertical position of the centre of gravity (VCG) of a boat can be determined

Note 1 to entry: The VCG, together with a knowledge of the shape of the hull (the lines plan) and the position of the waterline in a known loading condition, enables all the intact stability parameters to be calculated.

Note 2 to entry: A full description of how to conduct an inclining experiment is given in standard naval architecture textbooks, e.g. References [6] and [8].

3.5.8
loaded waterline
waterline of the boat when upright in the maximum load condition

3.5.9
recess retention level
level of water in recesses, when the boat is at design trim, at which 20 % of the uppermost periphery of the surrounding coaming (measured in horizontal plane parallel to waterline at design trim) would be covered by water, assuming that all gates, doors or drainage openings are considered to be sealed

Note 1 to entry: This definition is illustrated in Annex K.

3.5.10
righting lever
GZ
at a specific heel or trim angle in calm water, the distance in both the horizontal and transverse planes between the centre of buoyancy and the centre of gravity

Note 1 to entry: Righting lever is equal to the righting moment divided by the product of mass, in kilograms, and acceleration due to gravity (9,806 m/s^2) and is expressed in metres.

3.5.11
righting moment
RM
at a specific heel or trim angle in calm water, the restoring moment generated by the transverse offset of the centre of buoyancy of the submerged part of the hull from the centre of gravity of the boat

Note 1 to entry: The righting moment varies with heel angle and is usually plotted graphically against heel angle. Righting moments are most accurately derived by computer from knowledge of the hull shape and the location of the centre of gravity. Other more approximate methods are also available. The righting moment varies substantially with hull form, centre of gravity position, boat mass and trim attitude.

Note 2 to entry: Righting moment is expressed in newton metres or kilonewton metres.

3.5.12
standard equipment
devices including outboard motors (excluding those for tenders), loose furniture and furnishings such as tables, chairs, non-permanently installed mattresses, curtains, etc., portable bilge pumping equipment, anchors, chain, warps, sails, loose external equipment such as fenders, boathook and boarding ladder, oars (if appropriate), and essential safety equipment

Note 1 to entry: Where outboard engine(s) are fitted, the heaviest engine(s) recommended for the boat by the manufacturer is(are) included, the mass allowed for outboard engines and their batteries (if not permanently installed) not being less than that given in columns 1 and 3 of Tables F.1 and F.2.

Note 2 to entry: As a guide, the mass allowed for anchors, anchor chain, warps and fenders should not be less than about $0{,}25 L_H^{2,2}$ (kg). In some cases, up to double this mass may be appropriate.

3.5.13
watertightness degree
degree of watertightness as specified in ISO 11812 and ISO 12216

Note 1 to entry: The degree of watertightness is summarized as follows:

© ISO 2022 – All rights reserved

Documents
Document Sharing Hub
Full document details: BS EN ISO 12217-1:2025

— Degree 1: Degree of tightness providing protection against effects of continuous immersion in water.
— Degree 2: Degree of tightness providing protection against effects of temporary immersion in water.
— Degree 3: Degree of tightness providing protection against splashing water.
— Degree 4: Degree of tightness providing protection against water drops falling at an angle of up to 15° from the vertical.

3.5.14
under way
not at anchor, or made fast to the shore, or aground

4 Symbols

For the purposes this document, the symbols and associated units in Table 1 apply.

Table 1 — Symbols

Symbol	Unit	Meaning
ϕ	degree (°)	Angle of heel
ϕ_D	degree (°)	Downflooding angle of any downflooding opening, see 3.2.2
ϕ_{DA}	degree (°)	Downflooding angle at which a certain area of openings is submerged, see 3.2.2
ϕ_{GZmax}	degree (°)	Angle of heel at which maximum righting moment or lever occurs
ϕ_O	degree (°)	Angle of heel measured during offset-load test, see 6.2 and Annex B
$\phi_{O(R)}$	degree (°)	Maximum permitted heel angle during offset-load test, see 6.2.3
ϕ_R	degree (°)	Assumed roll angle in a seaway, see 6.3.2
ϕ_V	degree (°)	Angle of vanishing stability, see 3.3.9
ϕ_W	degree (°)	Angle of heel due to calculation wind speed, see 6.4
A_{LV}	m^2	Windage area of hull in profile at the appropriate loading condition, see 3.3.7
A'_{LV}	m^2	Windage area of hull in profile but not less than $0{,}5L_HB_H$, see 6.3.2
A_S	m^2	Reference sail area according to 3.3.8
B_H	m	Beam of hull according to 3.3.3 and ISO 8666
B_{WL}	m	Beam waterline according to 3.3.4, which for multihull boats is the sum of the maximum waterline beams of all hulls
CL		Crew limit = maximum number of persons on board, see 3.5.3
d		Density coefficient for submerged test weights, see Clause F.3
F_M	m	Freeboard amidships at the appropriate loading condition, see 3.3.5
GM_T	m	Transverse metacentric height
GZ	m	Righting lever = righting moment (N·m)/[mass (kg) × 9,806(m/s^2)], see 3.5.10
h	m	vertical distance between geometric centres of A_{LV} and underwater profile area, see 6.3.2
h_D	m	Actual downflooding height, see 3.2.3 and 6.1.2
$h_{D(R)}$	m	Required downflooding height, see 6.1.2
LCG	m	Longitudinal position of the centre of gravity from a chosen datum
L_H	m	Length of hull measured according to 3.3.1
L_{WL}	m	Length of waterline in the appropriate loading condition according to 3.3.2
m	kg	Mass of boat, used where more than one loading condition is considered
m_{EC}	kg	Mass of the boat in the empty craft condition, see 3.4.1
m_{LA}	kg	Mass of the boat in the loaded arrival condition, see 3.4.6
m_{LC}	kg	Mass of the boat in the light craft condition, see 3.4.2
m_{LDC}	kg	Mass of the boat in the maximum load condition, see 3.4.5

© ISO 2022 – All rights reserved
Documents
Document Sharing Hub
Full document details: BS EN ISO 12217-1:2025

Table 1 *(continued)*

Symbol	Unit	Meaning
m_{ML}	kg	Mass of the maximum load, see 3.4.4
m_{MO}	kg	Mass of the boat in the minimum operating condition, see 3.4.3
M_W	N·m	Heeling moment due to wind, see 6.3.2
RM	N·m	Righting moment, see 3.5.11
T_C	m	Draught of canoe body at the appropriate loading condition according to 3.3.6
V_D	m^3	Displacement volume, see 3.4.7
V_R	m^3	Volume of a non-quick-draining recess, see Annex A
v_W	m/s	Calculation wind speed, see 3.5.1
VCG	m	Vertical position of the centre of gravity from a chosen datum
x_D	m	Longitudinal distance of downflooding opening from nearest extremity of L_H
x'_D	m	Longitudinal distance of downflooding opening from forward end of L_H
y_D	m	Transverse distance of downflooding opening from periphery of boat
y'_D	m	Transverse distance of downflooding opening off centreline
z_D	m	Height above waterline of downflooding opening

5 Procedure

5.1 Maximum load

Decide on the crew limit and the maximum load that the boat is intended to carry in accordance with the definitions. The crew limit shall not exceed that determined by the seating or standing space requirements of ISO 14946:2021.

IMPORTANT — Ensure that the maximum load is not underestimated.

NOTE If a boat is assessed with different amounts of maximum load, different design categories may be assigned according to the load.

5.2 Sailing or non-sailing

Confirm that the boat is defined as non-sailing. Non-sailing boats are those where

$$A_S < 0{,}07 \times (m_{LDC})^{2/3} \tag{1}$$

where

A_S is the reference sail area according to 3.3.8 (expressed in square metres) and ISO 8666:2020;

m_{LDC} is the mass of the boat in the maximum load condition as defined in 3.4.5.

Other boats are sailing boats and shall be assessed using ISO 12217-2:2022.

5.3 Tests and calculations to be applied

5.3.1 Non-sailing boats, whether monohull or multihull, shall comply with all the requirements of any one of six options according to amount of flotation and decking, and whether the boat is fitted with suitable recesses. These options and the tests to be applied (as described in Clause 6) are given in Table 2. The design category finally given is that for which the boat satisfies all the relevant requirements of any one of these options. See Annex I.

© ISO 2022 – All rights reserved

Documents
Document Sharing Hub
Full document details: BS EN ISO 12217-1:2025

NOTE For any given test, the requirements may vary according to the chosen option, e.g. for downflooding height.

5.3.2 Where boats are fitted with a bow loading ramp then either the bow ramp must be watertight to degree 2 (see 3.5.13) or the boat must comply with this document when the bow ramp is open.

Table 2 — Tests to be applied

Option	1	2	3	4	5	6
Categories possible	**A and B**	**C and D**	**B**	**C and D**	**C and D**	**C and D**
Decking or covering	**Fully enclosed boat**[a]	**Fully enclosed boat**[a]	**Any boat**	**Any boat**	**Partially protected boat**[b]	**Any boat except fully enclosed boat**[c]
Downflooding openings	6.1.1	6.1.1	6.1.1	6.1.1	6.1.1	6.1.1
Downflooding-height test	6.1.2	6.1.2	6.1.2	6.1.2[d]	6.1.2	6.1.2
Downflooding angle	6.1.3	—	6.1.3	—	—	—
Offset-load test	6.2	6.2	6.2	6.2	6.2	6.2
Resistance to waves + wind	6.3	—	6.3	—	—	—
Heel due to wind action	—	6.4[e]	—	6.4[e]	6.4[e]	6.4[e]
Recess size	6.5	6.5[f]	—	—	—	6.5.4[f]
Habitable multihulls	6.6	6.6	6.6	6.6	6.6	6.6
Motor sailers	6.7	—	—	—	—	—
Flotation requirements	—	—	6.8	6.8	—	—
Flotation material	—	—	Annex G	Annex G	—	—
Detection and removal of water	6.9	6.9	6.9	6.9	6.9	6.9

[a] This term is defined in 3.1.6.

[b] This term is defined in 3.1.7.

[c] That is, any boat that is not "fully enclosed", thus including boats without any decking.

[d] The downflooding height test is not required to be conducted on some boats, see 6.1.2.1.

[e] The application of 6.4 is only required for boats where, in the minimum operating condition, $A_{LV} \geq 0{,}5 L_H B_H$.

[f] This requirement only applies to design category C.

5.4 Variation in input parameters

Users of this document shall consider the effect on compliance of variations in the empty craft mass within the builder's manufacturing tolerances.

6 Tests, calculations and requirements

6.1 Downflooding

NOTE These requirements are to ensure that a level of watertight integrity appropriate to the design category is maintained.

© ISO 2022 – All rights reserved
Documents
Document Sharing Hub
Full document details: BS EN ISO 12217-1:2025

6.1.1 Downflooding openings

6.1.1.1 All closing appliances (as defined in ISO 12216) such as windows, portlights, hatches, deadlights and doors shall comply with ISO 12216, according to design category and appliance location area.

6.1.1.2 No hatches or opening type windows shall be fitted in the hull with the lowest part of the opening less than 0,2 m (design category A, B or C) or 0,1 m (design category D) above the loaded waterline, except for emergency escape hatches on design category C boats, where 0,1 m is allowable.

6.1.1.3 Seacocks complying with ISO 9093 together with means of preventing flow into the boat when the seacock is open shall be fitted to through-hull pipe fittings located with any part of the opening below the loaded waterline when the boat is upright apart from:

a) engine exhausts, or

b) drains forming an integral part of the hull and of equal strength and tightness extending from the outlet to above the fully loaded waterline by at least 0,12 m for design category A, 0,08 m for design category B, 0,06 m for design category C or 0,04 m for design category D.

NOTE 1 Means of preventing flow into the boat may comprise:

— a pipe or hose extending above the loaded waterline, or

— a pipe or hose leading to a downflooding point above the loaded waterline, or

— a non-return valve, or

— a pipe or hose connected to a system that cannot flood the interior of the boat, or

— for seacocks not connected internally, a permanent cap or means of securing the seacock in the closed position.

Instructions for the correct and safe operation of seacocks shall be included in the owner's manual.

NOTE 2 Special requirements for seacocks on bilge system discharges are given in ISO 15083.

6.1.1.4 Openings within the boat, such as outboard engine trunks or free-flooding fish bait tanks, shall be considered as possible downflooding openings.

6.1.1.5 For boats to be given design category A or B, downflooding openings not fitted with any form of closing appliance shall only be permitted if they are not in Area I (as defined in ISO 12216) and are essential for cabin or engine ventilation requirements, but these shall at least comply with tightness degree 3.

6.1.1.6 The requirements given in 6.1.2 and 6.1.3 apply to all downflooding openings except:

a) watertight recesses with a combined volume less than $(L_H B_H F_M)/40$, or quick-draining recesses;

b) drains from:

   1) quick-draining recesses, or

   2) watertight recesses which, if filled, would not lead to downflooding or capsize when the boat is upright,

   and which:

   i) are freeing ports fitted with non-return flap closures which are watertight from the exterior to degree 3 of ISO 12216, or

© ISO 2022 – All rights reserved

Documents
Document Sharing Hub
Full document details: BS EN ISO 12217-1:2025

ii) have a combined cross-sectional area smaller than three times the minimum area required to comply with ISO 11812 for quick-draining cockpits;

c) non-opening appliances which comply with ISO 12216;

d) opening appliances located in the topsides which comply with ISO 12216 which are:

1) referenced in the owner's manual as watertight closure to be kept shut when under way, and

2) clearly marked on the inboard side "KEEP SHUT WHEN UNDER WAY" in upper case letters not less than 4,8 mm high, and

3) positioned so that the lowest part of the opening is above the loaded waterline by at least 50 % of the minimum downflooding height required by 6.1.2 or in the case of means of escape fitted to habitable multihulls considered to be susceptible to inversion (see 6.6) positioned with the bottom of the clear opening not less than 0,2 m (design category A or B) or 0,1 m (design category C or D) above the loaded waterline when the boat is upright;

e) opening appliances which are fitted in a compartment of such restricted volume that, even if flooded, the boat satisfies all the requirements;

f) opening appliances located other than in the topsides which comply with ISO 12216 to tightness degree 2 and which are referenced in the owner's manual as being "KEEP SHUT WHEN UNDER WAY" and clearly marked as such on the appliance on the inboard side in upper case letters not less than 4,8 mm high;

g) engine exhausts or other openings that are only connected to watertight systems;

h) discharge pipes fitted with non-return valves;

i) openings in the sides of outboard engine wells which are of:

1) watertightness degree 2 and having the lowest point of downflooding more than 0,1 m above the loaded waterline, or

2) watertightness degree 3 and having the lowest point of downflooding more than 0,2 m above the loaded waterline and also above the top of the transom in way of the engine mounting, provided that well drain holes are fitted, see Figure 2, or

3) watertightness degree 4 and having the lowest point of downflooding more than 0,2 m above the loaded waterline and also above the top of the transom in way of the engine mounting, provided that well drain holes are fitted, and that the part of the interior or non-quick-draining spaces into which water might be admitted has a length less than $L_H/6$ and from which water up to 0,2 m above the loaded waterline cannot drain into other parts of the interior or non-quick-draining spaces of the boat, see Figure 2.

© ISO 2022 – All rights reserved
Documents
Document Sharing Hub
Full document details: BS EN ISO 12217-1:2025

Dimensions in metres

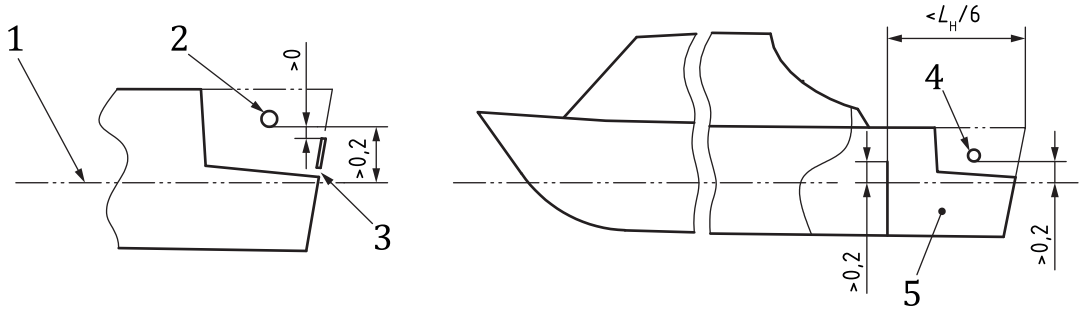

Key

1 waterline

2 watertightness degree 3 or 4

3 drain

4 watertightness degree 4

5 non-quick-draining space

Figure 2 — Openings in outboard engine wells

6.1.2 Downflooding height

6.1.2.1 Test

This test is to demonstrate sufficient margins of freeboard for the boat in the maximum load condition before water is shipped aboard.

The downflooding height test is not required to be conducted on the following design category C and D boats:

— those which, when tested in accordance with Clause F.4, have been shown to support, in addition to the mass required by Clause F.2 and Table F.5, in the same location, an additional equivalent dry mass (kg) of (75CL + 10 % of dry mass of stores and equipment included in the maximum load), or

— those which do not take on water when heeled to 90° from the upright in the light craft condition.

This test shall be performed using people as described below, or test weights to represent people (at 75 kg per person), or by calculation (using a lines plan and displacement derived by a weighing or measured freeboards).

a) Select a number of people equal to the crew limit, having an average mass of not less than 75 kg.

b) In calm water, load the boat with all items of maximum load, with the people positioned so as to achieve the design trim.

c) Measure the height from the waterline to the points at which water could first begin to enter any downflooding opening except those excluded in 6.1.1.6. Where a downflooding opening is fully protected by a higher coaming around the recess from which it leads, the downflooding height shall be measured to the lowest point of water ingress of that coaming, see Figure C.1. Where an opening in the hull is permanently attached to a watertight pipe or trunk rising to a higher level within the boat, the downflooding height is taken to the critical height within that pipe or trunk, see Figures C.1 and D.1 c).

© ISO 2022 – All rights reserved

Documents
Document Sharing Hub
Full document details: BS EN ISO 12217-1:2025

Downflooding height to downflooding points within quick-draining or watertight recesses shall be measured as though the following openings are closed:

i) freeing ports fitted with non-return flap closures which are watertight from the exterior to degree 3 of ISO 12216, or

ii) drains having a combined cross-sectional area smaller than three times the minimum area required to comply with ISO 11812 for quick-draining cockpits.

6.1.2.2 Requirements

a) Determine the design category by comparing the measurements with the requirements for minimum downflooding height, as modified by b) to d) below, using either

   1) the method of Annex A, which generally gives the lowest requirement, or

   2) Figures 3 and 4, which are based only on boat length.

b) For boats assessed using option 3, 4 or 6 (see Table 2), the required downflooding height within $L_H/3$ of the bow shall be increased as shown in Figure 5.

c) Boats assessed using option 3, 4 or 6 are permitted a 20 % reduction in required downflooding height in way of an outboard engine mounting position, provided that the width of the area where this reduction applies is minimized.

d) Boats assessed using Figure 3 or Figure 4 shall be permitted downflooding openings having a combined clear area, in square millimetres (mm^2), of not more than $50L_H^2$ within the aft quarter of L_H, provided that the downflooding height to these openings is not less than 75 % of that required by these figures.

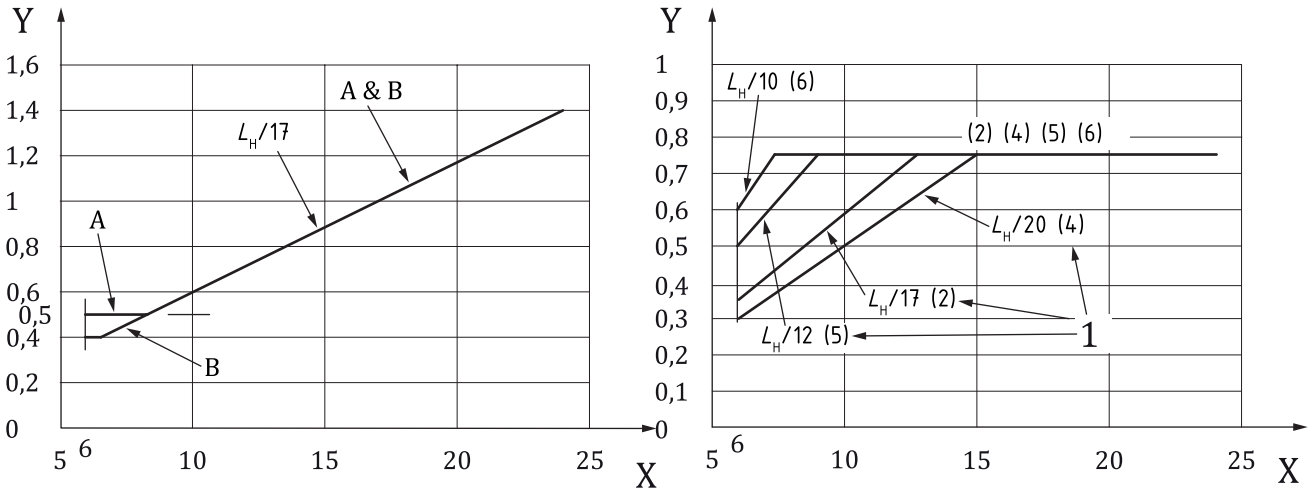

a) Design categories A and B **b) Design category C**

Key

X length of hull (m)

Y required downflooding height (m)

1 option numbers (see Table 2)

Figure 3 — Required downflooding height — design categories A, B and C

© ISO 2022 – All rights reserved

Documents
Document Sharing Hub

Full document details: BS EN ISO 12217-1:2025