BS EN ISO 12643-2:2023

BSI Standards Publication

Graphic technology — Safety requirements for graphic technology equipment and systems

Part 2: Prepress and press equipment and systems

Documents
Document Sharing Hub

Full document details: BS EN ISO 12643-2:2023

National foreword

This British Standard is the UK implementation of EN ISO 12643-2:2023. It is identical to ISO 12643-2:2023. It supersedes BS EN 1010-2:2006+A1:2010 and BS ISO 12643-2:2010, which are withdrawn.

The UK participation in its preparation was entrusted to Technical Committee PAI/43, Graphic technology.

A list of organizations represented on this committee can be obtained on request to its committee manager.

Contractual and legal considerations

This publication has been prepared in good faith, however no representation, warranty, assurance or undertaking (express or implied) is or will be made, and no responsibility or liability is or will be accepted by BSI in relation to the adequacy, accuracy, completeness or reasonableness of this publication. All and any such responsibility and liability is expressly disclaimed to the full extent permitted by the law.

This publication is provided as is, and is to be used at the recipient's own risk.

The recipient is advised to consider seeking professional guidance with respect to its use of this publication.

This publication is not intended to constitute a contract. Users are responsible for its correct application.

© The British Standards Institution 2023
Published by BSI Standards Limited 2023

ISBN 978 0 580 97118 1

ICS 37.100.10

Compliance with a British Standard cannot confer immunity from legal obligations.

This British Standard was published under the authority of the Standards Policy and Strategy Committee on 31 December 2023.

Amendments/corrigenda issued since publication

Date	Text affected

Documents
Document Sharing Hub

Full document details: BS EN ISO 12643-2:2023

EUROPEAN STANDARD

NORME EUROPÉENNE

EUROPÄISCHE NORM

EN ISO 12643-2

December 2023

ICS 37.100.10

Supersedes EN 1010-2:2006+A1:2010

English Version

Graphic technology - Safety requirements for graphic technology equipment and systems - Part 2: Prepress and press equipment and systems (ISO 12643-2:2023)

Technologie graphique - Exigences de sécurité pour les systèmes et l'équipement de technologie graphique - Partie 2: Systèmes et équipement pour la préimpression et la presse (ISO 12643-2:2023)

Graphische Technik - Sicherheitsanforderungen an Ausrüstungen und Systeme der graphischen Technik - Teil 2: Ausrüstungen und Systeme in der Druckvorstufe und im Druckbereich (ISO 12643-2:2023)

This European Standard was approved by CEN on 19 November 2023.

CEN members are bound to comply with the CEN/CENELEC Internal Regulations which stipulate the conditions for giving this European Standard the status of a national standard without any alteration. Up-to-date lists and bibliographical references concerning such national standards may be obtained on application to the CEN-CENELEC Management Centre or to any CEN member.

This European Standard exists in three official versions (English, French, German). A version in any other language made by translation under the responsibility of a CEN member into its own language and notified to the CEN-CENELEC Management Centre has the same status as the official versions.

CEN members are the national standards bodies of Austria, Belgium, Bulgaria, Croatia, Cyprus, Czech Republic, Denmark, Estonia, Finland, France, Germany, Greece, Hungary, Iceland, Ireland, Italy, Latvia, Lithuania, Luxembourg, Malta, Netherlands, Norway, Poland, Portugal, Republic of North Macedonia, Romania, Serbia, Slovakia, Slovenia, Spain, Sweden, Switzerland, Türkiye and United Kingdom.

EUROPEAN COMMITTEE FOR STANDARDIZATION
COMITÉ EUROPÉEN DE NORMALISATION
EUROPÄISCHES KOMITEE FÜR NORMUNG

CEN-CENELEC Management Centre: Rue de la Science 23, B-1040 Brussels

© 2023 CEN All rights of exploitation in any form and by any means reserved worldwide for CEN national Members.

Ref. No. EN ISO 12643-2:2023 E

Documents
Document Sharing Hub

Full document details: BS EN ISO 12643-2:2023

European foreword

This document (EN ISO 12643-2:2023) has been prepared by Technical Committee ISO/TC 130 "Graphic technology" in collaboration with Technical Committee CEN/TC 198 “Printing and paper machinery - Safety” the secretariat of which is held by DIN.

This European Standard shall be given the status of a national standard, either by publication of an identical text or by endorsement, at the latest by June 2024, and conflicting national standards shall be withdrawn at the latest by June 2026.

Attention is drawn to the possibility that some of the elements of this document may be the subject of patent rights. CEN shall not be held responsible for identifying any or all such patent rights.

This document supersedes EN 1010-2:2006+A1:2010.

Any feedback and questions on this document should be directed to the users’ national standards body/national committee. A complete listing of these bodies can be found on the CEN website.

According to the CEN-CENELEC Internal Regulations, the national standards organizations of the following countries are bound to implement this European Standard: Austria, Belgium, Bulgaria, Croatia, Cyprus, Czech Republic, Denmark, Estonia, Finland, France, Germany, Greece, Hungary, Iceland, Ireland, Italy, Latvia, Lithuania, Luxembourg, Malta, Netherlands, Norway, Poland, Portugal, Republic of North Macedonia, Romania, Serbia, Slovakia, Slovenia, Spain, Sweden, Switzerland, Türkiye and the United Kingdom.

Endorsement notice

The text of ISO 12643-2:2023 has been approved by CEN as EN ISO 12643-2:2023 without any modification.

Documents
Document Sharing Hub

Full document details: BS EN ISO 12643-2:2023

Contents

Page

Foreword ... **vi**
Introduction ... **viii**
1 Scope ... **1**
2 Normative references ... **1**
3 Terms and definitions ... **2**
4 Significant hazards ... **5**
5 Equipment subject to requirements and interrelation between this document and ISO 12643-1:2023 ... **5**
5.1 General ... 5
5.2 Prepress equipment ... 5
5.3 Printing presses and coating/varnishing machines ... 6
5.4 Other equipment covered by this document ... 6
6 Safety requirements and/or protective measures ... **7**
6.1 General ... 7
6.2 Guarding of significant hazards ... 7
6.2.1 General ... 7
6.2.2 Guard openings ... 7
6.2.3 Guarding in-running nips ... 7
6.3 Interlocks ... 10
6.3.1 Interlocking with guard locking ... 10
6.3.2 Continuous motion at crawl speed with an interlocking guard open ... 11
6.3.3 Closing an interlocking guard on dampening, flexo or inking devices ... 12
6.3.4 Closing an interlocking guard on inkjet printing devices ... 12
6.4 Hold-to-run controls ... 12
6.4.1 Specific requirements for sheet-fed presses ... 12
6.4.2 Specific requirements for forms printing presses and leporello printing presses ... 12
6.5 Automatic format-setting operations ... 13
6.6 Additional safeguarding methods for machine devices and components ... 13
6.6.1 Delivery units (pile lifting and lowering devices) ... 13
6.6.2 Transport carriages ... 22
6.6.3 Guarding plate-clamping devices ... 22
6.6.4 Continuous-flow drying devices on web presses ... 22
6.6.5 Folders for web presses ... 22
6.6.6 Safety distances for web feed on web-fed presses ... 24
6.6.7 Screen printing presses ... 24
7 Changing of printing plates ... **25**
7.1 General ... 25
7.2 Automatic printing plate changes ... 25
7.3 Semi-automatic printing plate changes ... 26
8 Requirements for protection against other hazards ... **26**
8.1 General ... 26
8.2 Fire and explosion protection ... 27
8.2.1 Protection against fire and explosion in continuous-flow drying devices ... 27
8.2.2 Fire protection on web-fed rotary gravure presses and web-fed rotary flexo presses ... 29
8.3 Explosion protection exceptions ... 29
8.3.1 General ... 29
8.3.2 Exceptions for screen printing presses ... 30
8.3.3 Exceptions for automatic washing devices ... 30
8.4 Spillage from washing devices ... 30

© ISO 2023 – All rights reserved

AVA Documents
Document Sharing Hub
Full document details: BS EN ISO 12643-2:2023

8.5 Working platforms, access stairs, passageways and raised workplaces 30
8.5.1 General 30
8.5.2 Exception for sheet-fed presses 30
8.6 Electrostatic toner dust 31
8.7 Washing equipment for printing plates, rollers and doctor blades 31
8.7.1 Hazards due to emission of washing agents 31
8.7.2 Grounding of washing equipment 31
8.7.3 Unintended escape of solvents 31
8.8 Alcohol dosing devices 31
8.8.1 Concentration 31
8.8.2 Prevention of leakage and overflow 32
8.9 Refrigerating devices in ink and dampening units 32
8.10 Powder-spraying devices 32
8.11 Hazardous emissions of sheet-fed presses 32
8.12 Large-format inkjet digital printing machines (wide-format inkjet digital printing machines) 32
8.13 Dust protection requirements on web offset printing presses 34
8.14 Emergency stop devices and stop/safe pushbuttons at stationary control stands of web offset printing presses 34

9 Additional requirements for functions, operations, colours and mechanical specifications of manual control devices 34
9.1 General 34
9.2 Emergency stop device and ink, dampening, metering, flexo or fountain rollers 35
9.3 Emergency stop devices on auxiliary draw nips 35
9.4 Emergency stop device and inkjet printing heads 35
9.5 Ready pushbutton 35
9.6 Plate position control 35

10 Control systems for screen printing presses 36

11 Safety requirements for prepress equipment 36
11.1 Electrical equipment of prepress machinery 36
11.2 Electric/electronic control systems of prepress machinery 36
11.3 Exposing equipment 36
11.4 Safeguarding the discharge of liquids 36
11.5 Safeguarding in-running nips on engraving machines 36
11.6 Safeguarding bending unit on printing plate bending machines 37
11.7 Safeguarding printing plate punching devices 37

12 Signals and warning devices for automatic machine mode with double-push sequence 37

13 Control zones for web presses having multiple folders 38

14 Verification of safety requirements and/or protective /risk reduction measures 38

15 Contents of instruction handbook 41
15.1 General 41
15.2 Sheet-fed printing press systems 41
15.2.1 Residual risk from ink ducts 41
15.2.2 Residual risks in sheet delivery area 41
15.2.3 Sheet-fed presses used for printing on board or metal sheet 41
15.2.4 Rollers 41
15.2.5 Powders (anti-setoff powders) 42
15.3 Web-fed printing press systems 42
15.3.1 Rollers 42
15.3.2 In-running nips 42
15.3.3 Operation by two-hand control with guard open 42
15.4 Screen printing presses 42
15.4.1 Ventilation and admissible liquids 42
15.4.2 Access between screen printing frame and machine frame 42

© ISO 2023 – All rights reserved
Documents
Document Sharing Hub
Full document details: BS EN ISO 12643-2:2023

15.4.3 Use of different size screens 42
15.4.4 Crushing point between doctor blade and screen or machine table 42
15.4.5 Residual risks related to doctor blade 43
15.5 Automatic cylinder and roller washing device 43
15.6 Continuous-flow drying devices 43
15.6.1 General instructions 43
15.6.2 Inks and coatings 43
15.6.3 Solvents 43
15.6.4 Mist of UV inks and UV coatings 43
15.6.5 Solvents for manual washing 43
15.7 Oxidizers, incinerators and thermal cleaning plants 44
15.8 Alcohol dosing devices 44
15.9 Washing equipment for printing plates 44
15.10 Prepress machinery 44
15.11 Large–format inkjet digital printing machines 44
15.12 Handling of encraved cylinders 44
15.13 Fire protection on printing machines 45

Annex A (informative) **List of significant hazards** **46**

Annex B (informative) **Emission levels of sheet-fed presses resulting from tests conducted in Europe** **52**

Bibliography **58**

© ISO 2023 – All rights reserved

Documents
Document Sharing Hub
Full document details: BS EN ISO 12643-2:2023

Foreword

ISO (the International Organization for Standardization) is a worldwide federation of national standards bodies (ISO member bodies). The work of preparing International Standards is normally carried out through ISO technical committees. Each member body interested in a subject for which a technical committee has been established has the right to be represented on that committee. International organizations, governmental and non-governmental, in liaison with ISO, also take part in the work. ISO collaborates closely with the International Electrotechnical Commission (IEC) on all matters of electrotechnical standardization.

The procedures used to develop this document and those intended for its further maintenance are described in the ISO/IEC Directives, Part 1. In particular, the different approval criteria needed for the different types of ISO document should be noted. This document was drafted in accordance with the editorial rules of the ISO/IEC Directives, Part 2 (see www.iso.org/directives).

ISO draws attention to the possibility that the implementation of this document may involve the use of (a) patent(s). ISO takes no position concerning the evidence, validity or applicability of any claimed patent rights in respect thereof. As of the date of publication of this document, ISO had not received notice of (a) patent(s) which may be required to implement this document. However, implementers are cautioned that this may not represent the latest information, which may be obtained from the patent database available at www.iso.org/patents. ISO shall not be held responsible for identifying any or all such patent rights.

Any trade name used in this document is information given for the convenience of users and does not constitute an endorsement.

For an explanation of the voluntary nature of standards, the meaning of ISO specific terms and expressions related to conformity assessment, as well as information about ISO's adherence to the World Trade Organization (WTO) principles in the Technical Barriers to Trade (TBT), see www.iso.org/iso/foreword.html.

This document was prepared by Technical Committee ISO/TC 130, *Graphic technology,* in collaboration with the European Committee for Standardization (CEN) Technical Committee CEN/TC 198, *Printing and paper machinery — Safety,* in accordance with the Agreement on technical cooperation between ISO and CEN (Vienna Agreement).

This third edition cancels and replaces the second edition (ISO 12643-2:2010), which has been technically revised. The main changes compared to the previous edition are as follows:

— in 3.13, a definition for large-format inkjet digital printing machines has been added;

— in 6.2.2, the exemption for the maximum height of the feed opening has been deleted;

— in 6.2.3, new requirements in relation with in-running nips on anilox rollers (6.2.3.5) and cylinders/rollers in gravure printing presses (6.2.3.6) have been added;

— in 6.3, requirements for interlocks have been added;

— in 6.3, requirements for the movement of the inkjet heads when closing a protective device (6.3.4) have been added;

— in 6.6.1.3, the requirements for securing whole body access on deliveries have been adapted from the new requirements in ISO 12643-4:2023;

— in 6.6, the requirements for the protection of the pile carrier for heights above 800 mm have been deleted and newly regulated in ISO 12643-1:2023);

— in Clause 7, requirements for automatic and semi-automatic printing plate changing have been revised;

— in 8.2 and 8.3, the requirements for fire and explosion protection have been revised

© ISO 2023 – All rights reserved
Documents
Document Sharing Hub
Full document details: BS EN ISO 12643-2:2023

— in 8.3.2, 8.3.3, 8.7.2, 8.7.3, 15.9 and B.6.2.2.2, flash point to Globally Harmonised System (GHS, flammable liquids 60 °C) have been adapted;

— addition of 8.12 and 15.11 with requirements for large-format inkjet digital printing machines (wide-format inkjet digital printing machines)

— a new subclause 8.13 on dust protection requirements for web offset printing presses has been added;

— a new subclause 8.14 on Emergency stop devices and stop/safe pushbuttons at stationary control stands of web offset printing presses has been added;

— the clause on alternative controls for stop/safe function on sheet-fed presses has been deleted;

— in 9.4, a requirement for inkjet printing systems in connection with emergency stop has been added;

— the clause on colours for manual controls has been deleted;

— the list of significant hazards has been moved to an informative Annex A;

— the annex on protection zones against explosion has been moved to ISO 12643-1:2023;

— in Annex B, the following have been adapted:

  — selected measurement locations for the measurement of emissions of ink mist, varnish mist, ammonia, VOC IPA, VOC hydrocarbon compounds;

  — the limit value for ammonia at measurement location 2;

  — the measurement conditions for VOC IPA (6 % IPA in dampening water), VOC hydrocarbon compounds (measurement during entire washing program).

This document is intended to be used in conjunction with ISO 12643-1:2023.

A list of all parts in the ISO 12643 series can be found on the ISO website.

Any feedback or questions on this document should be directed to the user's national standards body. A complete listing of these bodies can be found at www.iso.org/members.html.

© ISO 2023 – All rights reserved

Documents
Document Sharing Hub
Full document details: BS EN ISO 12643-2:2023

Introduction

This document is a type-C standard as stated in ISO 12100:2010.

This document is of relevance, in particular, for the following stakeholder groups representing the market players with regard to machinery safety:

— machine manufacturers (small, medium and large enterprises);

— health and safety bodies (regulators, accident prevention organisations, market surveillance, etc.)

Others can be affected by the level of machinery safety achieved with the means of the document by the above-mentioned stakeholder groups:

— machine users/employers (small, medium and large enterprises);

— machine users/employees (e.g. trade unions, organizations for people with special needs);

— service providers, e. g. for maintenance (small, medium and large enterprises);

— consumers (in case of machinery intended for use by consumers).

The above-mentioned stakeholder groups have been given the possibility to participate at the drafting process of this document.

The machinery concerned and the extent to which hazards, hazardous situations or hazardous events are covered are indicated in the Scope and Clause 5 of this document.

When requirements of this type-C standard are different from those which are stated in type-A or type-B standards, the requirements of this type-C standard take precedence over the requirements of the other standards for machines that have been designed and built according to the requirements of this type-C standard.

The full set of requirements for graphic technology equipment and systems are those given in the part of ISO 12643 applicable to that type, together with the relevant requirements from ISO 12643-1:2023, to the extent specified in the Scope of the applicable part of ISO 12643.

This document supplements and modifies the general requirements of ISO 12643-1:2023. Where a requirement of this document conflicts with a requirement of ISO 12643-1:2023 the requirement of this document will take precedence.

© ISO 2023 – All rights reserved
Documents
Document Sharing Hub
Full document details: BS EN ISO 12643-2:2023

Graphic technology — Safety requirements for graphic technology equipment and systems —

Part 2:
Prepress and press equipment and systems

1 Scope

This document provides safety requirements specific to prepress and press equipment and systems.

This document provides additional safety requirements for the design and construction of new prepress and press equipment, and the auxiliary equipment integrated into the press control system.

This document is not applicable to prepress and press equipment and systems manufactured before the date of its publication.

2 Normative references

The following documents are referred to in the text in such a way that some or all of their content constitutes requirements of this document. For dated references, only the edition cited applies. For undated references, the latest edition of the referenced document (including any amendments) applies.

ISO 5149-1:2014, *Refrigerating systems and heat pumps — Safety and environmental requirements — Part 1: Definitions, classification and selection criteria*

ISO 5149-1:2014/Amd 1:2015, *Refrigerating systems and heat pumps — Safety and environmental requirements — Part 1: Definitions, classification and selection criteria — Amendment 1: Correction of QLAV, QLMV*

ISO 5149-1:2014/Amd 2:2021, *Refrigerating systems and heat pumps — Safety and environmental requirements — Part 1: Definitions, classification and selection criteria — Amendment 2: Update of Annex A and the refrigerant tables*

ISO 12100:2010, *Safety of machinery — General principles for design — Risk assessment and risk reduction*

ISO 12643-1:2023, *Graphic technology — Safety requirements for graphic technology equipment and systems — Part 1: General requirements*

ISO 13732-1:2006, *Ergonomics of the thermal environment — Methods for the assessment of human responses to contact with surfaces — Part 1: Hot surfaces*

ISO 13849-1:2023, *Safety of machinery — Safety-related parts of control systems — Part 1: General principles for design*

ISO 13855:2010, *Safety of machinery — Positioning of safeguards with respect to the approach speeds of parts of the human body*

ISO 13857:2019, *Safety of machinery — Safety distances to prevent hazard zones being reached by upper and lower limbs*

ISO 19353:2019, *Safety of machinery — Fire prevention and fire protection*

IEC 60079-10-1:2020, *Explosive atmospheres — Part 10-1: Classification of areas — Explosive gas atmospheres*

© ISO 2023 – All rights reserved

Documents
Document Sharing Hub
Full document details: BS EN ISO 12643-2:2023

IEC/TS 60079-32-1:2013+AMD1:2017, *Explosive atmospheres — Part 32-1: Electrostatic hazards guidance*

IEC 60529:1989+AMD1:1999, *Degrees of protection provided by enclosures (IP Code)*

IEC 60825-1:2014, *Safety of laser products — Part 1: Equipment classification and requirements*

IEC 62061:2021, *Safety of machinery — Functional safety of safety-related electrical, electronic and programmable electronic control systems*

IEC 62368-1:2018, *Audio/video, information and communication technology equipment — Part 1: Safety requirements*

EN 1127-1:2019, *Explosive atmospheres — Explosion prevention and protection - Part 1: Basic concepts and methodology*

3 Terms and definitions

For the purposes of this document, the terms and definitions given in ISO 12643-1:2023, ISO 13849-1:2023 and the following apply.

ISO and IEC maintain terminological databases for use in standardization at the following addresses:

— ISO Online browsing platform: available at https://www.iso.org/obp

— IEC Electropedia: available at https://www.electropedia.org/

3.1
access height
<sheet-fed press delivery zone> dimension of the maximum opening into the area below the sheet gripper, measured between the access level and the lower edge of fixed machine parts

Note 1 to entry: Examples for the access level are floor, fixed platform or footboard.

Note 2 to entry: Examples for fixed machine parts are fixed guard, fixed cover or fixed parts such as a sheet stop.

Note 3 to entry: See Figure 3.

3.2
alcohol dosing device
mechanism used to regulate the amount of alcohol in the dampening water of offset printing presses

3.3
automatic plate-clamping device
mechanism used to secure a printing plate during the automatic or semi-automatic changing of the plates

3.4
coating unit
coater
machine that applies a predetermined thickness of a liquid substance on substrates made of paper or a similar material

Note 1 to entry: Examples for liquid substances are glue, varnish or ink.

3.5
continuous-flow drying device
mechanism built into printing presses to dry and cure inks and coatings that have been applied to substrates

EXAMPLE Hot air, IR or UV radiation.

© ISO 2023 – All rights reserved
Documents
Document Sharing Hub
Full document details: BS EN ISO 12643-2:2023

3.6
crawl speed
continuous movement at a steady slow speed, and initiated by a momentary contact control

3.7
cylinder screen printing press
sheet-fed machine in which the substrate to be printed is pressed against the screen by an impression cylinder

Note 1 to entry: The substrate can be a paper sheet, for example.

3.8
digital printing machine
machine used in commercial applications where the printing image is produced in the machine from data stored in digital form and transferred to the substrate without the use of a printing plate

Note 1 to entry: This includes digital printing presses and wide-format inkjet printing machines.

3.9
draw roller
power-driven roller that pulls a substrate

3.10
enabling device
mechanism that needs to be in a specified state or condition in order for a second actuator or device to start a machine under hold-to-run control, and which will stop machine movement as soon as one of the hold-to-run controls is released or the status of the mechanism changes

3.11
forms printing press
leporello printing press
machine for the production of continuous forms where paper webs printed with one or more colours are accordion-folded or wound onto a reel

Note 1 to entry: In addition to the printing section, the machine consists of devices for punching, remaliners (sprocket punching), cross-perforation, longitudinal perforation and leporello (zig-zag) folding.

3.12
gravure printing machine
machine consisting of a printing cylinder, an inking system, in which ink is applied to the printing cylinder by an ink roll or spray and the excess is removed by a doctor blade, and an impression cylinder covered with a rubber composition, which presses the substrate into contact with the ink in the cells of the printing cylinder

3.13
large-format inkjet digital printing machine
wide-format inkjet digital printing machine
digital printing machine for the production of large-format print products of different materials, such as paper, plastic films or foils, fabrics and flat structures in which an inkjet printing head arranged across the transport of the product produces print on the printing substrate line by line

Note 1 to entry: The substrate to be printed on can be sheets or webs.

Note 2 to entry: Generally, these machines have an image area wider than 600 mm.

3.14
pile turner
device provided in the vicinity of sheet-fed printing presses and used to turn piles of printed paper for further processing, such as back-printing on a second run

© ISO 2023 – All rights reserved

Documents
Document Sharing Hub
Full document details: BS EN ISO 12643-2:2023

3.15
powder-spraying device
equipment used to spray powder onto the printed material on the delivery side of sheet-fed printing presses

3.16
prepress equipment
machines used in the first stage of the graphic technology workflow, prior to printing, that include all the operations necessary for the preparation of images and image carriers

[SOURCE: ISO 12637-1:2006, 58, modified — The original term was "prepress" and "machines used in the" has been added in the definition.]

3.17
press system
printing press and a series of machines that supply substrate into and through the printing press and guide or direct the substrate to a cutting, folding or delivery device that delivers the product to the last working station integrated with the printing press control system

3.18
printing plate
base material that stores the image to be printed and transfers ink onto a substrate, thus printing the image

Note 1 to entry: The printed image can include pictures, artwork and/or text.

3.19
printing table
supportive surface to hold the substrate to be printed during the printing process

EXAMPLE Printing tables can be found on certain types of screen printing presses, for example.

3.20
proofing press
machine with manual feeding and delivery used for printing a small number of copies for assessing print quality

Note 1 to entry: Proofing presses are generally used for assessing print quality before the *printing plate* (3.18) is mounted in the production machine

3.21
reel turner
device used to turn reels of substrate for easier handling, for example for correct positioning of the reel when feeding webs to printing presses

3.22
screen frame
device for taking up the printing screen

3.23
screen printing press
printing press using semi-permeable printing forms consisting of fabric or steel mesh stretched over frames on which stencils are applied and through which ink or varnish is pressed to reproduce corresponding image areas onto a substrate

3.24
sheet-fed press
machine for printing sheet-size substrates, including proofing presses, in which sheets can be fed by automatic or manual feeders, or from sheeters attached to unwinding units

© ISO 2023 – All rights reserved
Documents
Document Sharing Hub
Full document details: BS EN ISO 12643-2:2023

3.25
washing device
equipment integrated into the printing press for washing cylinders and rollers such as ink rollers, blanket cylinders, printing cylinders, plate cylinders, etc.

3.26
washing equipment for printing plates
machines for washing *printing plates* (3.18) outside the printing press

EXAMPLE Screen washing equipment.

3.27
web-fed press
press in which a substrate passes through the printing couple(s) in a continuous form, as fed from a roll

3.28
web material
web of paper, board, foil or similar material that is to be handled or processed

4 Significant hazards

For the list of significant hazards covered by this document, see Annex A.

5 Equipment subject to requirements and interrelation between this document and ISO 12643-1:2023

5.1 General

This document is applicable to the equipment listed in 5.2 to 5.4. This equipment can be used in a stand-alone configuration or in combination with other machines affected by an integrated control system. This can include combinations of the machines noted below.

NOTE This document is intended to include the wide range of equipment used in the printing process. The equipment listed in 5.2 to 5.4 provides examples of the more typical equipment covered by this document but is not all-inclusive.

Prepress and press equipment and systems conforms with the requirements of ISO 12643-1:2023, as far as not modified or replaced by the requirements of this document.

5.2 Prepress equipment

The following prepress equipment are covered by this document:

— exposure equipment for the production of films and printing formes;

— equipment for developing films and printing formes;

— washing machines for printing formes;

— machines for bending printing formes;

— punching machines for film and printing plates;

— cutting machines for film and printing formes;

— machines for the production of gravure printing formes;

— scanners.

© ISO 2023 – All rights reserved

Documents
Document Sharing Hub
Full document details: BS EN ISO 12643-2:2023

5.3 Printing presses and coating/varnishing machines

The following are machines used for printing by various processes and are covered by this document:

— relief (letterpress, flexographic);

— offset (lithographic);

— sheet-fed printing presses, including coating/varnishing machines;

— web-fed rotary presses, including coating/varnishing machines and similar machinery;

— gravure (rotogravure, intaglio);

— screen printing;

— digital printing machines (electrostatic, inkjet, thermal, airbrush, etc.), including sheet-fed digital printing machines, web-fed digital printing machines, wide-format inkjet machines and similar machinery;

— proofing presses;

— combination presses (e.g. offset/flexo/screen).

5.4 Other equipment covered by this document

In addition to the equipment listed in 5.2, the following equipment are also covered by this document:

— washing equipment for cylinders and rollers;

— washing equipment for printing plates and scrapers;

— varnishing equipment;

— powder-spraying devices;

— alcohol dosing devices;

— imprinting/addressing/numbering equipment;

— automatic plate-clamping devices;

— automatic pile-handling equipment;

— washing equipment;

— inserting machines;

— pile turners, reel turners, elevators;

— dryers/pollution control, including continuous-flow drying devices, ultraviolet curing, infrared drying, electron beam, hot air, etc.;

— radiation equipment;

— in-line processing and finishing equipment;

— stackers;

— palletizers;

— bundlers;

— coaters;

© ISO 2023 – All rights reserved
Documents
Document Sharing Hub
Full document details: BS EN ISO 12643-2:2023

— chilling systems;

— electrostatic equipment;

— humidifiers;

— accumulating or piling-off devices;

— conveyors;

— unwinding, rewinding, reel transport devices;

— measuring and control devices;

— auxiliary devices on inking and dampening units.

6 Safety requirements and/or protective measures

6.1 General

Machinery shall be in accordance with the safety requirements and/or protective measures of this subclause. In addition, machinery shall be designed according to the principles of ISO 12100:2010 for relevant but not significant hazards that are not dealt with by this document.

6.2 Guarding of significant hazards

6.2.1 General

Safeguarding, consistent with operation of the machine, shall be provided in those areas where it is recognized that operators are exposed to significant hazards. The safeguarding requirements of ISO 12643-1:2023, 5.3 and this document apply.

6.2.2 Guard openings

On sheet-fed flexographic printing presses, the feed opening between the side lays and the sides of the machine shall be guarded by means of adjustable or self-adjusting guards.

The hazard points outside the side lays on sheet-fed flexographic printing presses shall be safeguarded for every format size used.

NOTE This safeguarding can be achieved, for example, by using accordion-type bellows or by the use of additional guards.

For hazard points within side lays, residual pile monitoring that is also used as a safety device shall be in accordance with at least PL d of ISO 13849-1:2023 or SIL 2 according to IEC 62061:2021.

6.2.3 Guarding in-running nips

6.2.3.1 Guarding in-running nips on sheet-fed presses

If technically feasible, trip nip bars in accordance with ISO 12643-1:2023, shall be used where frequent access is required to the area during machine motion, and cylinders are directly accessible after the interlocking guard has been opened.

If it is not possible to use trip nip bars as described above, hold-to-run control speed limitations defined in ISO 12643-1:2023, 5.3.6 apply.

NOTE Use of trip nip bars is not possible, for example, on small-size offset presses where trip nip bars would impede access to the cylinder for activities such as plate changing.

© ISO 2023 – All rights reserved

Documents
Document Sharing Hub
Full document details: BS EN ISO 12643-2:2023

Where cylinders have gaps that exceed those defined for smooth cylinders (see ISO 12643-1:2023, 3.69), trip nip bars in accordance with ISO 12643-1:2023, 5.7.7 should be used. Nip guards shall not be used with these cylinders. For such trip nip guards, the requirements of PL d of ISO 13849-1:2023 or SIL 2 of IEC 62061:2021 shall be satisfied and the interlocking system shall be designed such that the requirements for stopping paths defined in ISO 12643-1:2023, 5.7.7 are satisfied. Trip nip bars and cylinder gaps shall be designed such that cylinder gaps cannot be accessed behind trip nip bars, causing a hazard.

6.2.3.2 Guarding in-running nips on web-fed presses

In-running nips that are not in the operator's view from the position where the hold-to-run control or enabling device is operated shall be safeguarded by additional measures.

NOTE For example, such measures include:

— guarding;

— an electrically interlocked, movable nip bar on the outgoing side between the two blanket cylinders of a web offset printing press, that ensures that the bar is in position prior to reverse movement.

On machines with varying web paths where such measures for safeguarding the in-running nip existing between blanket cylinders during the reverse movement are not feasible, the following procedure using a hold-to-run with limited inch control is permitted, providing all of the following conditions are met:

— the speed shall not exceed 3 m/min;

— the movement shall not exceed 1,2 cylinder revolutions;

— a stop control element with mechanical latch (such as a stop/safe pushbutton) or an emergency stop device shall be in the immediate vicinity of the in-running nip;

— a distinctive audible warning signal, different from the audible warning signal used for forward inch, shall be used;

— a red flashing light shall be provided that can be seen during the warning and permissive periods, and a red warning light (steady burn, not flashing) shall be provided during operating time of the hold-to-run control in the immediate vicinity of any unguarded in-running nip that cannot be observed.

6.2.3.3 Guarding in-running cylinder nips on newspaper presses

In deviation from ISO 12643-1:2023, 5.3.4 nip guards may be used for web-fed newspaper printing presses on cylinder gaps of up to 19 mm circumferential slots. However, efforts should be made to limit cylinder gaps to 12 mm circumferential slots.

NOTE Some press cylinder lock-up devices, such as on newspaper presses, require gaps up to 19 mm, measured without the blanket. With the blanket in place, the gap is reduced significantly.

6.2.3.4 Guarding in-running nips on cylinder screen printing presses

On cylinder screen printing presses, the in-running nip on the printing cylinder shall be safeguarded.

NOTE This can be achieved, for example, by interlocking guards or guarding by the screen-printing forme.

Where the printing forme is used as a means of guarding, additional protective measures are required for lifting and removal of the printing forme.

Such additional measures can include electrical interlocking, which allows cylinder rotations only under hold-to-run control in accordance with ISO 12643-1:2023, 5.3.6 as long as the printing forme is lifted.

© ISO 2023 – All rights reserved
Documents
Document Sharing Hub
Full document details: BS EN ISO 12643-2:2023

6.2.3.5 Safeguarding of the drawing-in point on anilox rolls of printing machines

As an exception to ISO 12643-1:2023, 5.3, complete safeguarding of drawing-in points at printing units during the continuous rotation of the anilox roll is not possible for process-related technical reasons and the safety distances according to ISO 13857:2019 cannot be met.

Continuous rotation of the anilox roll to prevent ink drying is permitted if all the following conditions are fulfilled.

— The distance between the plate cylinder and the anilox roll shall at least be 25 mm during the continuous rotation, for finger protection reasons.

— The anilox roll may only continue to rotate at a speed that is necessary for the process (to prevent drying of the surface of the anilox roller).

— An emergency-stop button shall be provided within easy reach.

— Actuation of the emergency stop shall stop continuous rotation as well as the printing ink circulation immediately.

Once an interlocking guard has been closed, the anilox roll may start rotating again automatically if it is ensured that the danger zone cannot be reached at this stage.

NOTE See also 6.3.3.

6.2.3.6 Guarding in-running nips on printing cylinders and inking rollers on gravure printing machines

As an exception to ISO 12643-1:2023, 5.3 complete guarding of the in-running nip between inking roller and printing cylinder on printing units of gravure printing machines (see Figure 1) is not possible during the continuous rotation of printing cylinders and inking rollers for process-related technical reasons and the safety distances according to ISO 13857:2019 cannot be met.

Continuous rotation of printing cylinders and inking rollers to prevent ink drying is permitted if all the following conditions are fulfilled.

— Inadvertent access is prevented.

— The printing forme may continue to run only up to the speed required for the technical process.

— An emergency stop button is within reach.

— Activation of the emergency stop causes an immediate end of the continuous rotation mode.

NOTE 1 During normal operation, the in-running nip is intrinsically safe due to the lubricating effect of the inks/cleaning agents.

NOTE 2 If the ink flow is interrupted or disrupted due to a fault, there is a risk of drawing in due to the changed friction properties.

Manual activities, may be carried out, when the printing unit is not in the production mode if all the following conditions are fulfilled.

— The nip shown in Figure 1, item 8 is safeguarded.

NOTE 3 Access from the side of the doctor blade is prevented by the doctor blade assembly.

— The setting operations are described in the instruction handbook.

— Potential residual risks are described in the instruction handbook.

NOTE 4 See also 6.3.3.

© ISO 2023 – All rights reserved

Documents
Document Sharing Hub
Full document details: BS EN ISO 12643-2:2023

NOTE 5 Continuous rotation is sustained movement (idling) of inking rollers at a limited speed when the web is at standstill.

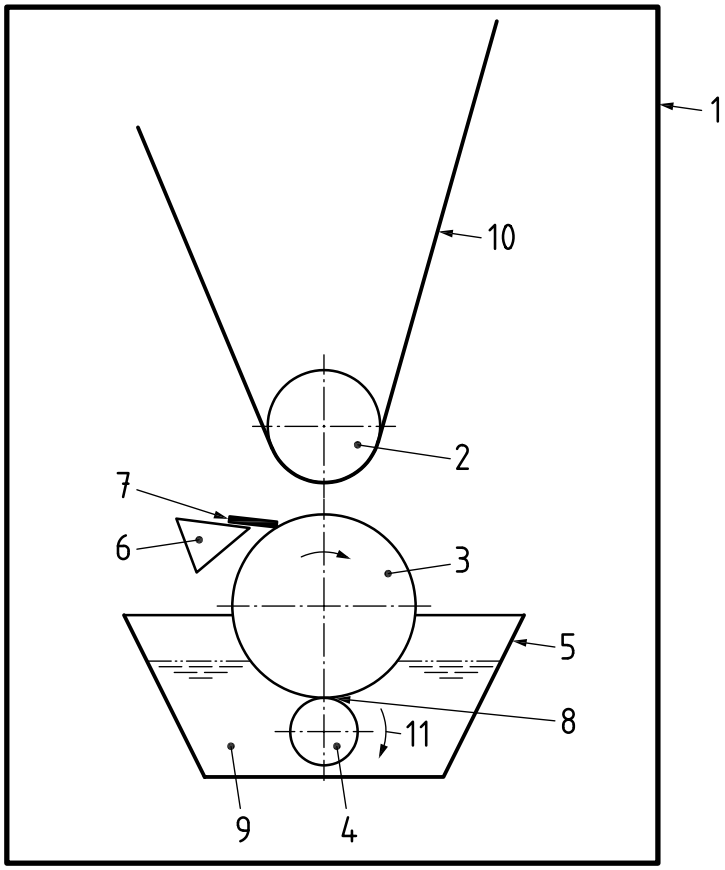

Key

1 sideframe
2 rubber roller
3 impression cylinder
4 inking roller
5 ink pan
6 doctor blade holder
7 doctor blade
8 nip point
9 ink
10 web
11 direction of rotation of inking roller during continuous rotation (no production mode such as standstill of machine)

Figure 1 — In-running nips at gravure print units

6.3 Interlocks

6.3.1 Interlocking with guard locking

Interlocking guards shall be designed so that the sensor (interlock) shall be activated within the limits specified in Table 1, depending on the distance to the hazard. Otherwise, guard locking shall be utilized.

Interlocking with guard locking is also required where the hazardous movement cannot be stopped within 10 s after actuation of the position detector.

© ISO 2023 – All rights reserved
Documents
Document Sharing Hub
Full document details: BS EN ISO 12643-2:2023

Table 1 — Requirements for interlocking guards without guard locking

Safety distance[a], L_{sr}, between guard opening and hazard point mm	Maximum opening[a], L_g, of the guard while the detector changes its state mm
<80	≤30
≥80 and <500	≤40
≥500 and <850	≤80
≥850	≤160
[a] See Figure 2 for location of the measurements.	

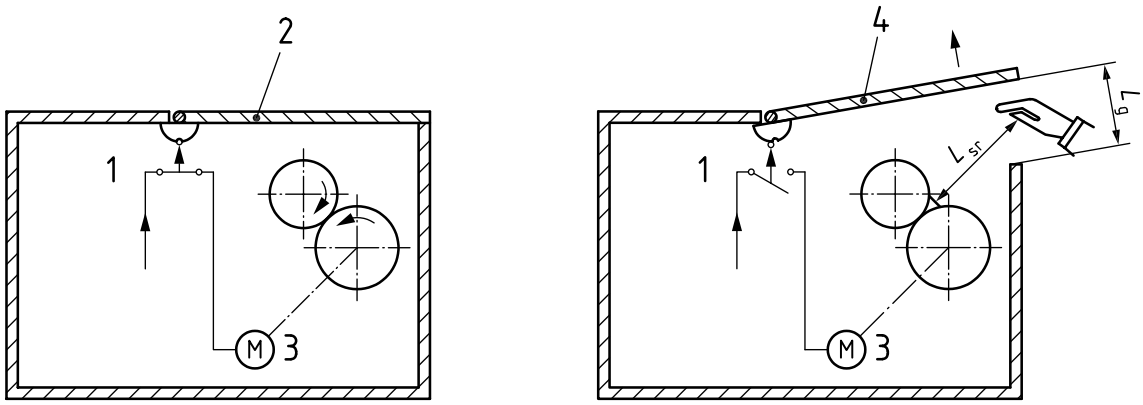

a) Motor running **b) Motor stopped**

Key

1 failsafe limit switch
2 guard closed
3 motor
4 guard open
L_{sr} safety distance
L_g maximum opening

Figure 2 — Distances related to requirements for guard locking

6.3.2 Continuous motion at crawl speed with an interlocking guard open

As an exception to ISO 12643-1:2023, 5.3.2.1.1, the continuous machine motion at crawl speed with a guard open shall be permitted only if all in-running nips remain guarded by either a nip guard or a trip nip guard bar conforming to the requirements of ISO 12643-1:2023, 5.7.7. Maximum crawl speed is determined by the ability of the slowest acting trip nip guard bar to safeguard the hazard.

As an exception to ISO 12643-1:2023, 5.3.5.1, when one or more interlocking guard(s) is opened, moved or removed, and the only hazard in the area being protected by the relevant interlocking guard are in-running nips, which are safeguarded by trip nip bars as described in ISO 12643-1:2023, 5.7.7, and combined with a speed limitation to a maximum (surface) operating speed of 5m/min. machine motion can continue.

NOTE For example, during parallel manual washing of cylinders or rollers in different/several/more than one printing unit.

© ISO 2023 – All rights reserved

Documents
Document Sharing Hub
Full document details: BS EN ISO 12643-2:2023