BS EN ISO 12643-3:2023

BSI Standards Publication

Graphic technology — Safety requirements for graphic technology equipment and systems

Part 3: Binding and finishing equipment and systems

Documents
Document Sharing Hub

Full document details: BS EN ISO 12643-3:2023

National foreword

This British Standard is the UK implementation of EN ISO 12643-3:2023. It is identical to ISO 12643-3:2023. It supersedes BS ISO 12643-3:2010 and BS EN 1010-3:2002+A1:2009, which are withdrawn.

The UK participation in its preparation was entrusted to Technical Committee PAI/43, Graphic technology.

A list of organizations represented on this committee can be obtained on request to its committee manager.

Contractual and legal considerations

This publication has been prepared in good faith, however no representation, warranty, assurance or undertaking (express or implied) is or will be made, and no responsibility or liability is or will be accepted by BSI in relation to the adequacy, accuracy, completeness or reasonableness of this publication. All and any such responsibility and liability is expressly disclaimed to the full extent permitted by the law.

This publication is provided as is, and is to be used at the recipient's own risk.

The recipient is advised to consider seeking professional guidance with respect to its use of this publication.

This publication is not intended to constitute a contract. Users are responsible for its correct application.

© The British Standards Institution 2023
Published by BSI Standards Limited 2023

ISBN 978 0 580 97119 8

ICS 37.100.10

Compliance with a British Standard cannot confer immunity from legal obligations.

This British Standard was published under the authority of the Standards Policy and Strategy Committee on 31 December 2023.

Amendments/corrigenda issued since publication

Date	Text affected

Documents
Document Sharing Hub

Full document details: BS EN ISO 12643-3:2023

EUROPEAN STANDARD

NORME EUROPÉENNE

EUROPÄISCHE NORM

EN ISO 12643-3

December 2023

ICS 37.100.10

Supersedes EN 1010-3:2002+A1:2009, EN 1010-4:2004+A1:2009

English Version

Graphic technology - Safety requirements for graphic technology equipment and systems - Part 3: Binding and finishing equipment and systems (ISO 12643-3:2023)

Technologie graphique - Exigences de sécurité pour les systèmes et l'équipement de technologie graphique - Partie 3: Systèmes et équipement de reliure et de finissage (ISO 12643-3:2023)

Graphische Technik - Sicherheitsanforderungen an Ausrüstungen und Systeme der graphischen Technik - Teil 3: Ausrüstungen und Systeme in der Buchbinderei und Druckweiterverarbeitung (ISO 12643-3:2023)

This European Standard was approved by CEN on 19 November 2023.

CEN members are bound to comply with the CEN/CENELEC Internal Regulations which stipulate the conditions for giving this European Standard the status of a national standard without any alteration. Up-to-date lists and bibliographical references concerning such national standards may be obtained on application to the CEN-CENELEC Management Centre or to any CEN member.

This European Standard exists in three official versions (English, French, German). A version in any other language made by translation under the responsibility of a CEN member into its own language and notified to the CEN-CENELEC Management Centre has the same status as the official versions.

CEN members are the national standards bodies of Austria, Belgium, Bulgaria, Croatia, Cyprus, Czech Republic, Denmark, Estonia, Finland, France, Germany, Greece, Hungary, Iceland, Ireland, Italy, Latvia, Lithuania, Luxembourg, Malta, Netherlands, Norway, Poland, Portugal, Republic of North Macedonia, Romania, Serbia, Slovakia, Slovenia, Spain, Sweden, Switzerland, Türkiye and United Kingdom.

EUROPEAN COMMITTEE FOR STANDARDIZATION
COMITÉ EUROPÉEN DE NORMALISATION
EUROPÄISCHES KOMITEE FÜR NORMUNG

CEN-CENELEC Management Centre: Rue de la Science 23, B-1040 Brussels

© 2023 CEN All rights of exploitation in any form and by any means reserved worldwide for CEN national Members.

Ref. No. EN ISO 12643-3:2023 E

Documents
Document Sharing Hub

Full document details: BS EN ISO 12643-3:2023

European foreword

This document (EN ISO 12643-3:2023) has been prepared by Technical Committee ISO/TC 130 "Graphic technology" in collaboration with Technical Committee CEN/TC 198 “Printing and paper machinery - Safety” the secretariat of which is held by DIN.

This European Standard shall be given the status of a national standard, either by publication of an identical text or by endorsement, at the latest by June 2024, and conflicting national standards shall be withdrawn at the latest by June 2026.

Attention is drawn to the possibility that some of the elements of this document may be the subject of patent rights. CEN shall not be held responsible for identifying any or all such patent rights.

This document supersedes EN 1010-3:2002+A1:2009 and EN 1010-4:2004+A1:2009.

Any feedback and questions on this document should be directed to the users’ national standards body/national committee. A complete listing of these bodies can be found on the CEN website.

According to the CEN-CENELEC Internal Regulations, the national standards organizations of the following countries are bound to implement this European Standard: Austria, Belgium, Bulgaria, Croatia, Cyprus, Czech Republic, Denmark, Estonia, Finland, France, Germany, Greece, Hungary, Iceland, Ireland, Italy, Latvia, Lithuania, Luxembourg, Malta, Netherlands, Norway, Poland, Portugal, Republic of North Macedonia, Romania, Serbia, Slovakia, Slovenia, Spain, Sweden, Switzerland, Türkiye and the United Kingdom.

Endorsement notice

The text of ISO 12643-3:2023 has been approved by CEN as EN ISO 12643-3:2023 without any modification.

Documents
Document Sharing Hub

Full document details: BS EN ISO 12643-3:2023

Contents

Page

Foreword ... **v**
Introduction ... **vii**
1 Scope ... **1**
2 Normative references ... **1**
3 Terms and definitions ... **1**
4 Significant hazards ... **4**
5 Guarding of significant hazards ... **4**
5.1 General ... 4
5.2 Interlocks ... 5
5.2.1 Interlocking with guard locking ... 5
5.2.2 Exception for machine motion at inching speed ... 6
5.2.3 Exception for machine motion at production speed ... 6
5.3 Guarding of hoppers and hopper feeders ... 6
5.3.1 Manually loaded hoppers ... 6
5.3.2 Guarding of automatically fed hoppers ... 6
5.3.3 Protection of unused hoppers and hopper feeders ... 7
5.3.4 Separating elements on hopper feeders ... 7
5.4 Guarding on binding and finishing machines ... 7
5.4.1 Hand-fed riveting, eyeletting and attaching machines ... 7
5.4.2 Hand-fed flat- and saddle-stitching machines ... 7
5.4.3 Gang stitchers and drum stitchers ... 8
5.4.4 Gathering machines ... 11
5.4.5 Perfect binders ... 13
5.4.6 Paper drills ... 15
5.4.7 Book signature presses ... 17
5.4.8 Book press ... 17
5.4.9 Sheet-folding machines ... 18
5.4.10 Book production lines for the production of hard-cover books ... 19
5.4.11 Back-rounding and pressing machines ... 20
5.4.12 Backlining and head-banding machines ... 20
5.4.13 Casing-in (case-binding) machines ... 21
5.4.14 Book-cover crease-forming machines (presses) ... 23
5.5 Inserting and collating machines ... 23
5.6 Counter-stackers ... 23
5.6.1 Safeguarding divert gates (waste separator) ... 23
5.6.2 Safeguarding hazard points at turntable ... 24
5.6.3 Pneumatic system ... 24
5.7 Paper-embossing machines ... 24
5.7.1 Safeguarding in-running nips on guide rollers ... 24
5.7.2 Stretch rollers and counter rollers ... 24
5.7.3 Safeguarding movement of counter roller ... 24
5.7.4 Insulation of heated parts ... 25
5.8 Finishing machines ... 25
5.8.1 Coaters ... 25
5.8.2 Laminators ... 27
5.9 Guillotine cutters ... 30
5.9.1 Knife cycles ... 30
5.9.2 Interruption of cutting cycles ... 31
5.9.3 Clamping ... 31
5.9.4 Failure of knife and clamp bar linkages ... 32
5.9.5 Backgauge ... 32
5.9.6 Guarding front (operating side) of a guillotine ... 34

AVA Documents
Document Sharing Hub

© ISO 2023 – All rights reserved

Full document details: BS EN ISO 12643-3:2023

5.9.7 Pile-support angles (jogging blocks) 38
5.9.8 Knife changing and adjustment 39
5.9.9 Hazards from integral feeding and delivery equipment on guillotine cutters 39
5.10 Trimmers and three knife trimmers 41
5.11 Three-knife trimmer with manual infeed 42
5.12 Inserters/attaching machines 43
5.13 Overcover/protective wrapper gluers 43
5.14 Corner-rounding machines 43

6 Verification of the safety requirements and/or protective/ risk reduction measures 44

7 Information for use — Contents of instruction handbook 47
7.1 Information for gang stitchers 47
7.2 Information for gathering machines 47
7.3 Information for perfect binders 47
7.4 Information for sheet folding machines 48
7.5 Information for inserting machines 48
7.6 Information for machines for the production of envelopes 48
7.7 Information for guillotine cutters 49
7.8 Information for integral feeding and delivery equipment for guillotine cutters 49
7.9 Information for trimmers 49
7.10 Information for corner-rounding machines 50
7.11 Information for contact with hot surfaces above 65 °C 50

Annex A (normative) **Safety distance of ESPDs on guillotine cutters and three knife trimmers with manual infeed — Formulae for the calculation of safety distance of ESPDs 51**

Annex B (informative) **List of significant hazards 52**

Bibliography 62

© ISO 2023 – All rights reserved

Documents
Document Sharing Hub
Full document details: BS EN ISO 12643-3:2023

Foreword

ISO (the International Organization for Standardization) is a worldwide federation of national standards bodies (ISO member bodies). The work of preparing International Standards is normally carried out through ISO technical committees. Each member body interested in a subject for which a technical committee has been established has the right to be represented on that committee. International organizations, governmental and non-governmental, in liaison with ISO, also take part in the work. ISO collaborates closely with the International Electrotechnical Commission (IEC) on all matters of electrotechnical standardization.

The procedures used to develop this document and those intended for its further maintenance are described in the ISO/IEC Directives, Part 1. In particular, the different approval criteria needed for the different types of ISO document should be noted. This document was drafted in accordance with the editorial rules of the ISO/IEC Directives, Part 2 (see www.iso.org/directives).

ISO draws attention to the possibility that the implementation of this document may involve the use of (a) patent(s). ISO takes no position concerning the evidence, validity or applicability of any claimed patent rights in respect thereof. As of the date of publication of this document, ISO had not received notice of (a) patent(s) which may be required to implement this document. However, implementers are cautioned that this may not represent the latest information, which may be obtained from the patent database available at www.iso.org/patents. ISO shall not be held responsible for identifying any or all such patent rights.

Any trade name used in this document is information given for the convenience of users and does not constitute an endorsement.

For an explanation of the voluntary nature of standards, the meaning of ISO specific terms and expressions related to conformity assessment, as well as information about ISO's adherence to the World Trade Organization (WTO) principles in the Technical Barriers to Trade (TBT), see www.iso.org/iso/foreword.html.

This document was prepared by Technical Committee ISO/TC 130, *Graphic technology,* in collaboration with the European Committee for Standardization (CEN) Technical Committee CEN/TC 198, *Printing and paper machinery — Safety,* in accordance with the Agreement on technical cooperation between ISO and CEN (Vienna Agreement).

This third edition cancels and the second edition (ISO 12643-3:2010), which has been technically revised.

The main changes are as follows:

— in 5.2, requirements for interlocks have been included (specific clause in ISO 12643-1 has been deleted);

— in 5.3.4, requirements for residual pile monitoring as a safety device on hopper feeders have been revised

— in 5.4.4, requirements on feeders and feeding sections at gathering machines have been added;

— in 5.4.4.4, requirements for residual pile monitoring as a safety device on feeders at gathering machines have been revised

— in 5.4.5, the requirements on safety-related control systems for temperature control and temperature monitoring in the gluing unit at perfect binders have been revised;

— in 5.4.5.7, requirements for safeguarding milling head cutters at perfect binders have been added;

— in 5.4.5.9, requirements for emergency stop at perfect binders have been added;

— requirements related to hazards dealt with in ISO 12643-1 have been deleted throughout the document (inclusion in the list of significant hazards);

© ISO 2023 – All rights reserved

Documents
Document Sharing Hub
Full document details: BS EN ISO 12643-3:2023

— in 5.4.5, the requirements on safety-related control systems for temperature control and temperature monitoring in the gluing section for hardcover lines have been revised;

— in 5.9.2, requirements for retraction of knife and clamp at guillotine cutters have been added;

— in 5.9.6; Figures 29 and 30 on guillotine cutters have been revised (30 mm added)

— the formula for the calculation of the minimum safety distance at guillotine cutters has been moved to A.1 as it also refers to the new subclause 5.11;

— a new subclause 5.11, Three-knife trimmers with manual infeed, has been added;

— in Clause 6, the table for the verification of the safety requirements and/or protective/risk reduction measures has been added;

— the list of significant hazards has been moved to Annex B;

— a reference to ISO 13849-2 has been added in Bibliography.

This document is intended to be used in conjunction with ISO 12643-1:2023.

A list of all parts in the ISO 12643 series can be found on the ISO website.

Any feedback or questions on this document should be directed to the user's national standards body. A complete listing of these bodies can be found at www.iso.org/members.html.

© ISO 2023 – All rights reserved
Documents
Document Sharing Hub
Full document details: BS EN ISO 12643-3:2023

Introduction

This document is a type-C standard as stated in ISO 12100:2010.

This document is of relevance, in particular, for the following stakeholder groups representing the market players with regard to machinery safety:

— machine manufacturers (small, medium and large enterprises);

— health and safety bodies (regulators, accident prevention organisations, market surveillance, etc.)

Others can be affected by the level of machinery safety achieved with the means of the document by the above-mentioned stakeholder groups:

— machine users/employers (small, medium and large enterprises);

— machine users/employees (e.g. trade unions, organizations for people with special needs);

— service providers, e. g. for maintenance (small, medium and large enterprises);

— consumers (in case of machinery intended for use by consumers).

The above-mentioned stakeholder groups have been given the possibility to participate at the drafting process of this document.

The machinery concerned and the extent to which hazards, hazardous situations or hazardous events are covered are indicated in the Scope of this document.

When requirements of this type-C standard are different from those which are stated in type-A or type-B standards, the requirements of this type-C standard take precedence over the requirements of the other standards for machines that have been designed and built according to the requirements of this type-C standard.

During the development of this document, existing relevant standards of other countries were taken into consideration. In cases where it was known that there is a national requirement that differs from this document, that has been noted.

The full set of requirements for graphic technology equipment and systems are those given in the part of ISO 12643 applicable to that type, together with the relevant requirements from ISO 12643-1:2023, to the extent specified in the Scope of the applicable part of ISO 12643.

This document supplements and modifies the general requirements of ISO 12643-1:2023. Where a requirement of this document conflicts with a requirement of ISO 12643-1:2023 the requirement of this document will take precedence.

© ISO 2023 – All rights reserved

Documents
Document Sharing Hub
Full document details: BS EN ISO 12643-3:2023

Documents
Document Sharing Hub

Graphic technology — Safety requirements for graphic technology equipment and systems —

Part 3:
Binding and finishing equipment and systems

1 Scope

This document provides safety requirements specific to binding and finishing equipment and systems. It provides additional safety requirements for the design and construction of new equipment used to convert printed or blank substrates into cut, folded, collated, assembled, bound, or otherwise finished product.

This document is applicable to processes for preparing substrate for the printing process. It is also applicable to a wide range of equipment used in the binding and finishing process.

2 Normative references

The following documents are referred to in the text in such a way that some or all of their content constitutes requirements of this document. For dated references, only the edition cited applies. For undated references, the latest edition of the referenced document (including any amendments) applies.

ISO 12643-1:2023, *Graphic technology — Safety requirements for graphic technology equipment and systems — Part 1: General requirements*

ISO 13849-1:2023, *Safety of machinery — Safety-related parts of control systems — Part 1: General principles for design*

ISO 13857:2019, *Safety of machinery — Safety distances to prevent hazard zones being reached by upper and lower limbs*

ISO 14119:2013, *Safety of machinery — Interlocking devices associated with guards — Principles for design and selection*

ISO 14120:2015, *Safety of machinery — Guards — General requirements for the design and construction of fixed and movable guards*

ISO 14123-1:2015, *Safety of machinery — Reduction of risks to health resulting from hazardous substances emitted by machinery — Part 1: Principles and specifications for machinery manufacturers*

ISO 14123-2:2015, *Safety of machinery — Reduction of risks to health resulting from hazardous substances emitted by machinery — Part 2: Methodology leading to verification procedures*

IEC 62061:2021, *Safety of machinery — Functional safety of safety-related electrical, electronic and programmable electronic control systems*

3 Terms and definitions

For the purposes of this document, the terms and definitions given in ISO 12643-1:2023, ISO 13849-1:2023 and the following apply.

ISO and IEC maintain terminological databases for use in standardization at the following addresses:

— ISO Online browsing platform: available at https://www.iso.org/obp

© ISO 2023 – All rights reserved

Documents
Document Sharing Hub
Full document details: BS EN ISO 12643-3:2023

— IEC Electropedia: available at https://www.electropedia.org/

3.1
anti-repeat device
mechanical or electromechanical mechanism that ensures that only one cutting cycle occurs for each manual activation or automatic cut if the primary stopping system or *single-cycle device* (3.30) fails

3.2
automatic cutting sequence
programmed succession of clamping operations and/or cutting movements that is initiated by the operator and proceeds to a specified point without further intervention by the operator

3.3
back-rounding and pressing machine
apparatus for processing book signatures, i.e. for rounding the spine and the trimmed front edge of book signatures and compressing the resulting signatures

3.4
backgauge
movable device (automatic or manual) on a guillotine cutter, positioned square to the cutting table, used to stop the stack of material to be cut when the material is pushed into the opening under the cutting blade by the operator, as well as to determine the dimensions of the cut

3.5
backlining and head-banding machine
<hard-cover bookbinding> equipment for the automatic production of hard-cover books where the binding together of the signatures is rounded or flat, with glue, gauze, or paper

3.6
book-cover crease-forming machine
<hard-cover bookbinding> apparatus for creating, under heat and pressure, a permanent bend in the cover of a hard-cover book, then pressing the entire cover surface

3.7
book press
device used for flattening books

3.8
book signature press
power-operated device used for flattening book signatures, which are fed and aligned manually

3.9
casing-in machine
<hard-cover bookbinding> apparatus for gluing the end papers of the book signatures to the interior surfaces of the book cover

3.10
clamp bar
device using pressure to secure product so that it does not move during an operation

3.11
coater
finishing machine that applies a predetermined thickness of a liquid substance (e.g. glue, varnish, ink) on substrates made of paper or a similar material

3.12
counter-stacker
machine for stacking piles of leaflets, books, magazines or newspapers such that the successive layers are positioned at 180° to the previous layer

© ISO 2023 – All rights reserved
Documents
Document Sharing Hub
Full document details: BS EN ISO 12643-3:2023

3.13
cutting cycle
<machines with a manually driven clamp bar> programmed succession of operations that begins when the knife drive is activated and ends when the knife returns to its retracted position

3.14
cutting cycle
<machines with a power-driven clamp bar> programmed succession of operations that begins when high-pressure clamping is initiated and ends when the knife and *clamp bar* (3.10) return to their retracted positions after a single clamp bar/knife stroke

3.15
cutting zone
three-dimensional space through which any part of the knife (knives) and/or *clamp bar(s)* (3.10) travels during the entire *cutting cycle* (3.14)

3.16
gang stitcher
machine for stitching folded sheets of paper, during the operation in which individual folded sheets are removed by feeding grippers and the open sheets are stacked on top of each other on a transport chain for subsequent back-stitching

3.17
gathering machine
apparatus that assembles sheets or folded sheets in a binding line

3.18
guillotine cutter
power-driven machine having a single knife that is used primarily to cut paper products, stacks of paper, or other substrates, as specified by the manufacturer

3.19
high-pressure clamping
operation of *clamp bar(s)* (3.10) with a dynamic force in excess of 300 N for machines up to and including 1,6 m in width, or in excess of 500 N for machines greater than 1,6 m in width, when measured at 75 % of the clamp bar opening (e.g. with the clamp bar at 25 % of its maximum travel distance measured from the retracted position)

Note 1 to entry: The 75 % value is to ensure that the measurement is made at the position that approximates to the size of an operator's hand.

3.20
inserting machine
apparatus that inserts printed matter such as leaflets and magazines at a predetermined position in other printed products, such as newspapers or magazines

3.21
knife drive
mechanism by which the knife of the guillotine is forced through the material to be cut

3.22
laminator
paper-finishing machine that applies a solid material (e.g. foil, paper) to a substrate made of paper or a similar material

© ISO 2023 – All rights reserved

Documents
Document Sharing Hub
Full document details: BS EN ISO 12643-3:2023

3.23
low-pressure clamping
<for machines with a power-driven clamp bar> operation of *clamp bar(s)* (3.10) with a dynamic force not exceeding 300 N for machines up to and including 1,6 m in width, or not exceeding 500 N for machines greater than 1,6 m in width, when measured at 75 % of the clamp bar opening (with the clamp bar at 25 % of its maximum travel measured from the retracted position)

Note 1 to entry: The 75 % value is to ensure that the measurement is made at the position that approximates to the size of an operator's hand.

3.24
manual clamping
operation of *clamp bar(s)* (3.10) in which the dynamic and static forces and motion of the clamp bar are directly supplied by the operator

3.25
paper drill
machine used to drill holes into piles of paper

3.26
paper-embossing machine
machine for finishing paper surfaces by using cylinders to press a design in relief into the paper

3.27
perfect binder
machine for the automatic production of brochures (soft-cover) or book signatures (hard-cover) where gathered folded sheets or single sheets are bound to form book or brochure signatures by applying glue on the pre-processed book back, and where book or brochure signatures are inserted into covers by gluing the cover on the back and/or sides

3.28
safety distance
minimum distance a protective device is required to be placed from a hazard zone

3.29
sheet-folding machine
apparatus to cut, perforate and/or crease single or multiple folds in single sheets of paper

3.30
single-cycle device
mechanism that ensures that only one cutting cycle occurs for each manual activation or automatic cut

Note 1 to entry: See *anti-repeat device* (3.1).

3.31
stored energy
potential energy that can be released without actuation of the machine drive or controls

4 Significant hazards

The list of significant hazards covered in this document is given in Annex B.

5 Guarding of significant hazards

5.1 General

Guarding, consistent with operation of the machine, shall be provided in those areas where it is recognized that operators are exposed to significant hazards. The guarding requirements of ISO 12643-1:2023 apply.

© ISO 2023 – All rights reserved
Documents
Document Sharing Hub
Full document details: BS EN ISO 12643-3:2023

Binding and finishing equipment and systems conforms with the requirements of ISO 12643-1:2023 as far as not modified or replaced by the requirements of this document.

5.2 Interlocks

5.2.1 Interlocking with guard locking

Interlocking guards shall be designed so that the sensor (interlock) shall be activated within the limits specified in Table 1, depending on the distance to the hazard. Otherwise, guard locking shall be utilized.

Interlocking with guard locking is also required where the hazardous movement cannot be stopped in 10 s or less after actuation of the position detector.

Table 1 — Requirements for interlocking guards without guard locking

Safety distance[a], L_{sr}, **between guard opening and hazard point** mm	**Maximum opening**[a], L_g, **of the guard while the detector changes its state** mm
<80	≤30
≥80 and <500	≤40
≥500 and <850	≤80
≥850	≤160
[a] See Figure 1 for location of the measurements.	

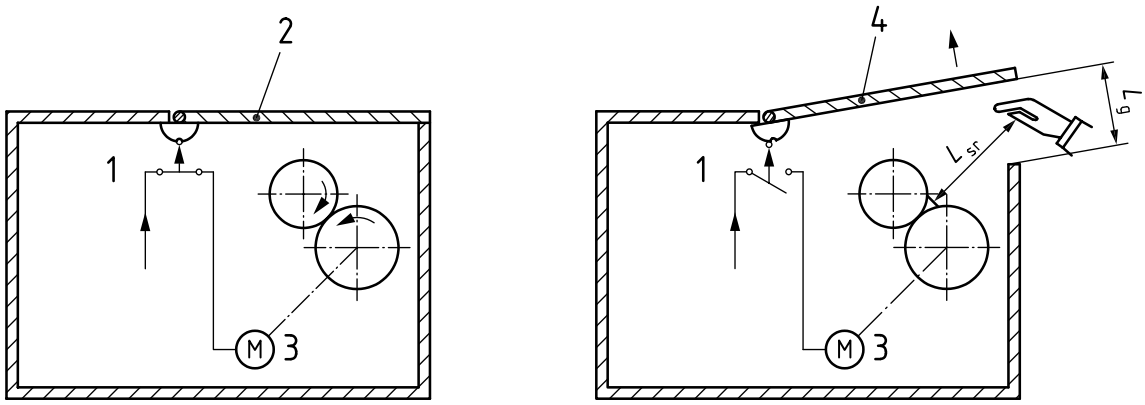

a) Motor running **b) Motor stopped**

Key

1 failsafe limit switch
2 guard closed
3 motor
4 guard open
L_{sr} safety distance
L_g maximum opening

Figure 1 — Distances related to requirements for guard locking

© ISO 2023 – All rights reserved

Documents
Document Sharing Hub
Full document details: BS EN ISO 12643-3:2023

5.2.2 Exception for machine motion at inching speed

If a machine is operating at inching speed and under conditions defined in ISO 12643-1:2023, 5.3.6, motion may continue when an interlocked guard is opened.

5.2.3 Exception for machine motion at production speed

This exception shall apply only to the specific machines identified in this document and does not apply to all equipment.

There might be parts of the equipment that cannot be observed or adjusted with the guard closed and need to be accessed by an authorized person with an interlocked guard open. Under these circumstances, the following alternative safety measures shall be taken.

a) A mechanical key lock shall be provided adjacent to the access area. There shall be only one key for this lock. The key for this lock shall be accessible only by an authorized person.

b) The key lock shall operate as a hold-to-run device as follows:

   1) inserting the key shall initiate a timer that has a maximum setting of 2 min;

   2) turning the key shall override the guard interlock of only that guard, up to the preset time limit;

   3) as long as the key is held in the turned position, the guard may be opened with machine motion at production speed until such time as the timer reaches the preset time limit;

   4) when the key is released, it shall automatically return to the neutral position and the guard interlock shall be automatically reactivated;

   5) if the key remains in the lock for a period longer than the preset time limit (which shall not exceed 2 min), the interlock on the guard shall be reactivated automatically and the equipment safety system shall stop machine motion.

c) The bypassing means shall be in accordance with at least ISO 13849-1:2023, PL d or IEC 62061:2021, SIL 2.

d) When adjustments are necessary, they shall be performed from outside the hazardous area.

e) A safety sign identifying the possible existing hazards with the guard open shall be provided adjacent to the lock. The label shall clearly indicate that, when the key is in the lock, the adjacent guard is overridden.

If a machine is equipped with this alternative safety measure, information regarding its safe use shall be contained in the instruction handbook.

5.3 Guarding of hoppers and hopper feeders

5.3.1 Manually loaded hoppers

On machines using manually loaded hoppers, the hazard points on the separating elements of the hopper feeder shall be safeguarded in accordance with 5.3.4. The exception defined in 5.2.2 can be applied to the hopper feeder, if necessary.

5.3.2 Guarding of automatically fed hoppers

On automatically fed hoppers where manual intervention during normal operation is not required and the material used makes access difficult, tunnel-type guards arranged with a safety distance of 550 mm from the nearest hazard point are considered adequate.

The exception defined in 5.2.2 can be applied to the hopper feeder, if necessary.

© ISO 2023 – All rights reserved
Documents
Document Sharing Hub
Full document details: BS EN ISO 12643-3:2023

5.3.3 Protection of unused hoppers and hopper feeders

For hoppers that are not used and cannot be stopped, blanking boards shall be provided to safeguard the hazard points at the separating elements.

5.3.4 Separating elements on hopper feeders

The hazard points on separating elements outside the sidelays on feeders shall be safeguarded for every format size used.

NOTE This safeguarding can be achieved, for example, by using accordion-type bellows or by the use of additional guards.

For hazard points within sidelays, the residual pile monitoring shall be used as a safety device.

Measures for fault detection [diagnostic coverage DC)] and to prevent manipulation of the safety device are required.

5.4 Guarding on binding and finishing machines

5.4.1 Hand-fed riveting, eyeletting and attaching machines

Hazard points between tools on riveting, eyeletting and attaching machines either shall be prevented by design or shall be safeguarded.

Means to satisfy this requirement include, but are not limited to, the following:

— observing a maximum distance of 4 mm between the tools in the open position;

— ensuring that the closing force of the movable tool is less than 50 N; a stronger closing force is allowed to become effective only after a sensing device has confirmed that no part of a human body is located between the two tools. The control system shall satisfy the requirements of ISO 12643-1:2023, 5.10.1.2.

NOTE The sensing device function, for example, can be based on the fact that the workpiece and a body part have different electrical resistances or different thicknesses.

Hazard points are safeguarded if guards are provided in accordance with ISO 13857:2019 or the machine can be started only by two-hand control.

For machines that are not guarded by a fixed or movable guard, a workpiece support shall be provided, and two-hand controls meeting the requirements of ISO 12643-1:2023 shall be used. If the workpiece needs to be held by hand outside the hazard zone, a hold-to-run control shall be provided for starting the machine instead of the two-hand control.

5.4.2 Hand-fed flat- and saddle-stitching machines

Adjustable guards shall be provided on flat-stitching, saddle-stitching and combination-stitching machines for operational reasons (see Figure 2 and Figure 3). Instructions that describe the safe adjustment of the guards in a clear and easily understandable format shall be provided on the machine.

NOTE This marking requirement is satisfied, for example, by providing safety signs that illustrate the safety distances required for the various stitching thicknesses by means of sketches and measurements.

On combination-stitching machines in the saddle-stitching mode, the guard for the upper tool shall extend to the height of the upper edge of the lower tool (upper edge of the saddle) and shall enclose the upper tool to prevent inadvertent access (see Figure 3).

Guarding can be by either two separate guards or a combined reversible guard. Combined reversible guards shall be suitable for saddle stitching as well as for flat stitching.

© ISO 2023 – All rights reserved

Documents
Document Sharing Hub
Full document details: BS EN ISO 12643-3:2023

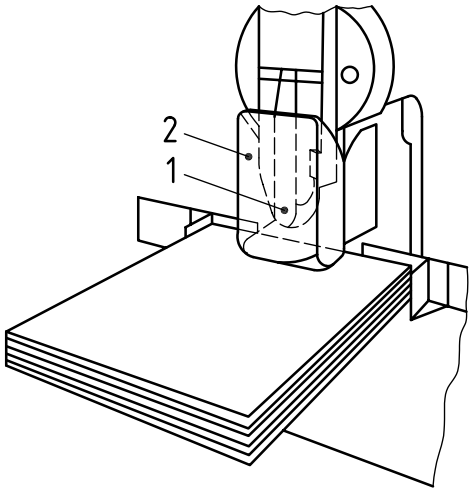

Key

1 upper tool

2 guard

Figure 2 — Flat stitcher

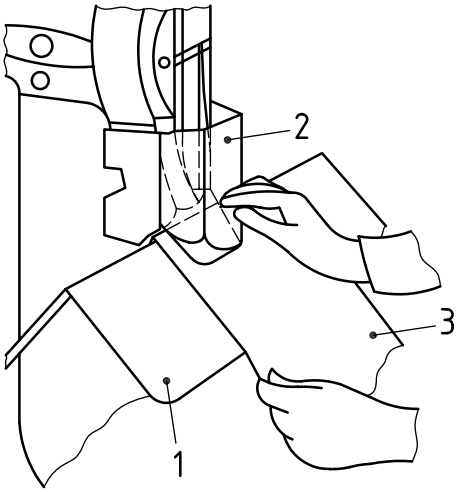

Key

1 upper edge of saddle

2 guard

3 workpiece

Figure 3 — Saddle stitcher

5.4.3 Gang stitchers and drum stitchers

5.4.3.1 Feeders on gang stitchers and drum stitchers

Depending on the design, fixed guards, movable guards, residual-pile monitoring or other means of guarding shall be used (see Figure 4).

© ISO 2023 – All rights reserved

Documents
Document Sharing Hub

Full document details: BS EN ISO 12643-3:2023

Where the bottom of the feeder on the transport chain side (see Figure 5) needs to remain open for functional reasons, the lower edges of the guards on the transport chain side shall be extended as low as technically feasible.

EXAMPLE An example of a “functional reason” would be for the building of air vortexes.

The exception defined in 5.2.2 may be applied to the feeder, if necessary.

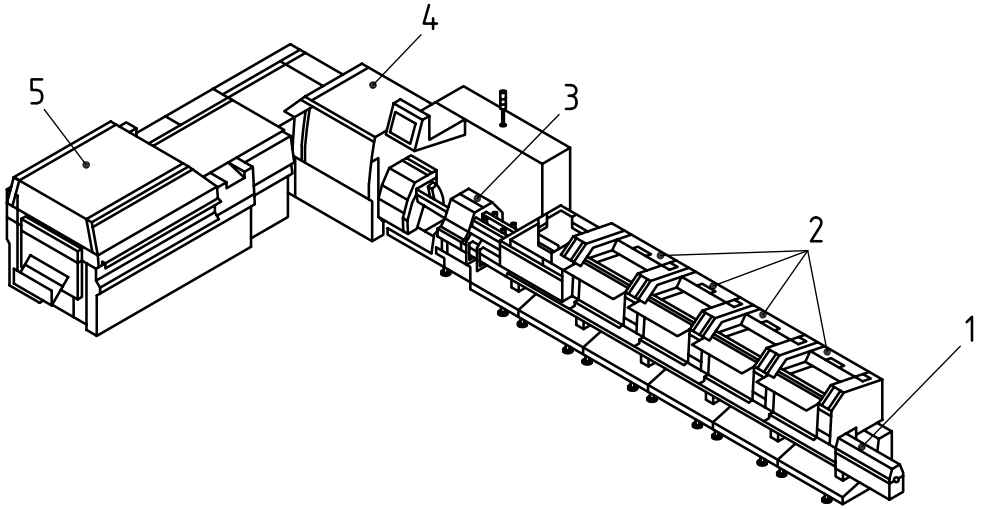

Key

1 transport chain
2 feeder
3 thickness control
4 stitching unit
5 trimmer

Figure 4 — Gang stitcher

© ISO 2023 – All rights reserved

Documents
Document Sharing Hub
Full document details: BS EN ISO 12643-3:2023

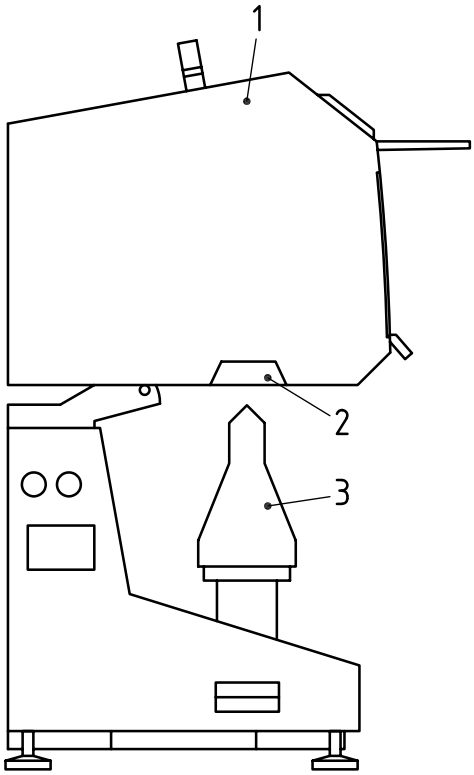

Key

1 hopper

2 bottom of feeder

3 transport chain

Figure 5 — Feeder

5.4.3.2 Guarding stitching section of gang stitchers

Hazard points on the stitching section shall be safeguarded by interlocked guards on the operator's side. The other side shall be guarded in accordance with ISO 12643-1:2023. Guard apertures shall be in accordance with ISO 13857:2019.

The transport pins shall be made of a flexible material to prevent a shearing hazard against the guard.

5.4.3.3 Caliper roll

Where an in-running nip exists on the caliper roll used for thickness control (see Figure 6), one or both of the following means of protection shall be used:

— maximum clamping force of 50 N with roller deflection at 20 mm;

— guarding in accordance with ISO 12643-1:2023.

The pins/carrier elements on the transport chain shall be made of a flexible material to prevent a shearing hazard against the guard.

© ISO 2023 – All rights reserved
Documents
Document Sharing Hub
Full document details: BS EN ISO 12643-3:2023

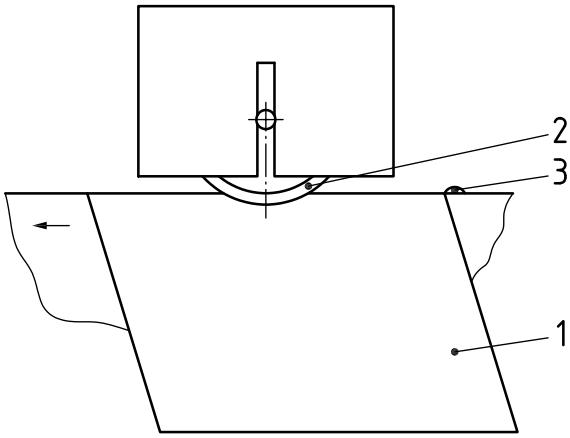

Key

1 folded sheets

2 in-running nip of caliper roll

3 transport chain with pins/carrier elements

Figure 6 — Caliper roll for thickness control

5.4.3.4 Transport-chain pushers on gang stitchers

A safety distance of at least 25 mm shall be maintained between transport-chain pins/carrier elements and fixed machine parts.

5.4.3.5 Starting gang stitchers and drum stitchers with a guard open

As an exception to ISO 12643-1:2023, 5.3.6, machine motion at a speed greater than 10 m/min is allowed by means of two-handed control for make-ready of gang stitchers and drum stitchers with interlocking guards in the open position and, provided that other requirements of ISO 12643-1:2023, 5.3.6 are met. The speed shall be as low as possible under procedural requirements.

5.4.3.6 Trimmer on gang stitchers and drum stitchers

The trimmer on gang stitchers and drum stitchers shall be safeguarded in accordance with 5.10.

5.4.4 Gathering machines

5.4.4.1 General

Gathering machines shall be guarded in accordance with 5.4.4.2 and 5.4.4.3. The exception defined in 5.2.2 can be applied, if necessary.

5.4.4.2 Guarding transport chains

For safeguarding the hazard points on the manual feeding unit, a minimum distance of 25 mm is required between the transport chain and fixed machine parts. Where the minimum distance cannot be achieved and maintained, trip bars meeting the requirements of ISO 12643-1:2023 may be used for safeguarding. Hazard points that can be reached from the manual feeding section in the following feeder shall be safeguarded by fixed or interlocking tunnel-type guards (see Figure 7) having a minimum length of 300 mm.

Hazard points on the gathering device (transport device) shall be safeguarded by fixed or interlocking guards.

© ISO 2023 – All rights reserved

Documents
Document Sharing Hub
Full document details: BS EN ISO 12643-3:2023

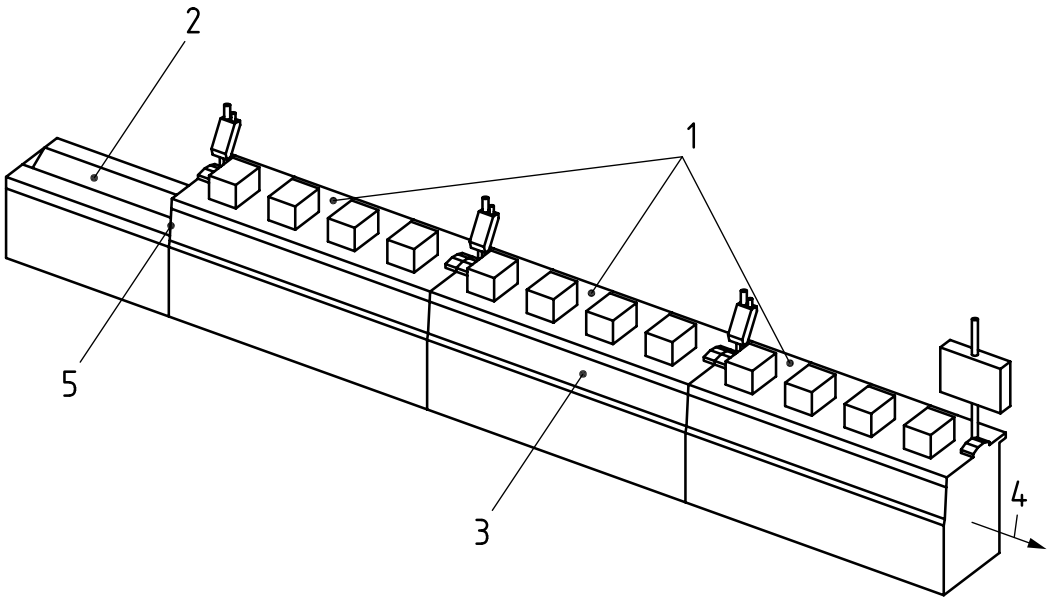

Key

1 hopper
2 manual feeding
3 gathering device (transport device)
4 following machines
5 tunnel guard

Figure 7 — Gathering machine (plan view)

5.4.4.3 Starting gathering machines with a guard open

As an exception to ISO 12643-1:2023, 5.3.6, machine motion at a speed greater than 10 m/min is allowed by means of two-handed control for make-ready of gathering machines with interlocking guards in the open position and, provided that other requirements of ISO 12643-1:2023, 5.3.6 are met. The speed shall be as low as possible under procedural requirements.

5.4.4.4 Feeder

When feeding manually, the hazardous zones of the separating elements of the feeder shall be safeguarded in accordance with ISO 12643-1:2023, 5.3.10.5.

For hazard points within sidelays, the residual pile monitoring shall be used as a safety device.

Measures for fault detection [diagnostic coverage (DC)] and to prevent manipulation of the safety device are required.

5.4.4.5 Feeding section

For feeding sections that are not used and cannot be stopped, blanking boards of maximum format size shall be provided to safeguard the hazardous zones at the separating elements instead of the blanks. These boards shall ensure that the machine is not stopped by the residual pile monitoring system.

5.4.4.6 Emergency stop system

An emergency stop device shall be provided. Additional emergency stop devices or stop/safe pushbuttons shall be provided on each main control panel and a maximum distance of 5 m apart.

© ISO 2023 – All rights reserved
Documents
Document Sharing Hub
Full document details: BS EN ISO 12643-3:2023

5.4.5 Perfect binders

5.4.5.1 Guarding book carriage hazards

The hazard points existing between book carriages and between the book carriage and the machine frame, as well as during cover pressing, shall be guarded in accordance with ISO 12643-1:2023. Depending upon the design, fixed guards, movable guards or other means of guarding can be used (see Figure 8).

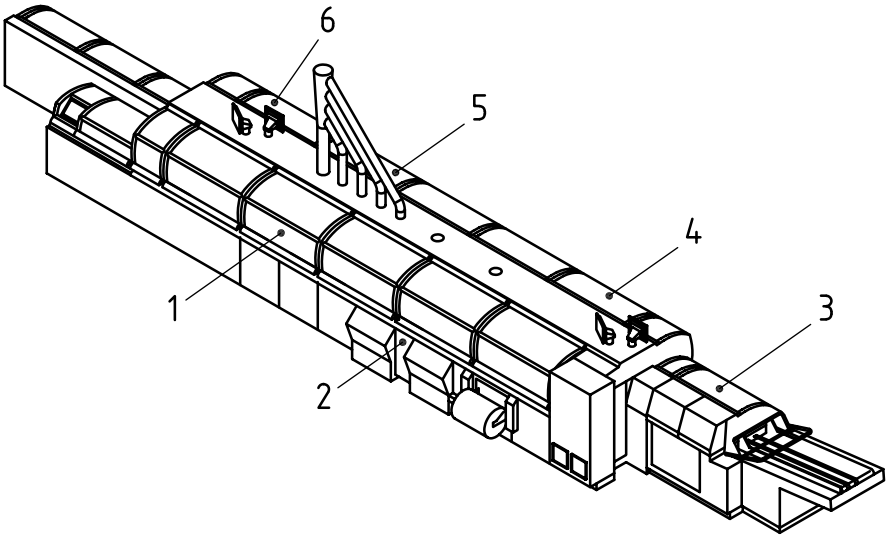

Key

1 milling unit
2 gluing unit
3 cover feeder
4 pressing unit
5 book carriage
6 delivery

Figure 8 — Perfect binder (plan view)

5.4.5.2 Hazards in the gluing unit

Guarding in accordance with ISO 12643-1:2023 shall be provided to protect personnel from hot glue spray, both during production and when routinely accessing other nearby areas. The guards adjacent to the hot glue mechanism shall be interlocked so that the hot glue spray mechanism is deactivated when the guard is open.

5.4.5.3 Glue pans

The glue pans for hot-melt shall be provided with a temperature control and maximum-temperature monitoring. The temperature control system shall be in accordance with at least ISO 13849-1:2023, PL b or IEC 62061:2021, SIL 1. The maximum-temperature monitoring shall be in accordance with at least ISO 13849-1:2023, PL b or IEC 62061:2021, SIL 1. The temperature control and maximum-temperature monitoring shall be implemented in separate standard control systems. Any hazardous hot-melt vapour shall be exhausted both from the perfect binder and from outside the machine for pre-melters, unless protection from exposure to the vapour is provided by other means.

Perfect binders using polyurethane hot-melt glues for binding shall be designed such that the machine does not emit hazardous concentrations of isocyanates, or that these are removed by an exhaust system. The requirements of ISO 14123-1:2015 and ISO 14123-2:2015 shall be met.

The monitoring of the exhaust system (hot-melt/polyurethane hot-melt) shall be in accordance with at least ISO 13849-1:2023, PL b or IEC 62061:2021, SIL 1.

© ISO 2023 – All rights reserved

Documents
Document Sharing Hub
Full document details: BS EN ISO 12643-3:2023