BRITISH STANDARD

BS EN ISO 13406-2:2002

# Ergonomic requirements for work with visual displays based on flat panels —

## Part 2: Ergonomic requirements for flat panel displays

The European Standard EN ISO 13406-2:2001 has the status of a British Standard

ICS 13.180; 31.120

NO COPYING WITHOUT BSI PERMISSION EXCEPT AS PERMITTED BY COPYRIGHT LAW

Documents
Document Sharing Hub

Full document details: BS EN ISO 13406-2:2002

# National foreword

This British Standard is the official English language version of EN ISO 13406-2:2001. It is identical with ISO 13406-2:2001.

The UK participation in its preparation was entrusted by Technical Committee PH/9, Applied Ergonomics, to Subcommittee PH/9/6, User System Interfaces, which has the responsibility to:

— aid enquirers to understand the text;

— present to the responsible international/European committee any enquiries on the interpretation, or proposals for change, and keep the UK interests informed;

— monitor related international and European developments and promulgate them in the UK.

A list of organizations represented on this subcommittee can be obtained on request to its secretary.

**Cross-references**

The British Standards which implement international or European publications referred to in this document may be found in the BSI Standards Catalogue under the section entitled "International Standards Correspondence Index", or by using the "Find" facility of the BSI Standards Electronic Catalogue.

A British Standard does not purport to include all the necessary provisions of a contract. Users of British Standards are responsible for their correct application.

**Compliance with a British Standard does not of itself confer immunity from legal obligations.**

This British Standard, having been prepared under the direction of the Health and Environment Sector Policy and Strategy Committee, was published under the authority of the Standards Policy and Strategy Committee on 25 January 2002

**Summary of pages**

This document comprises a front cover, an inside front cover, the EN ISO title page, the EN ISO foreword page, the ISO title page, pages ii to vii, a blank page, pages 1 to 147, the annex ZA page, an inside back cover and a back cover.

The BSI copyright date displayed in this document indicates when the document was last issued.

**Amendments issued since publication**

| Amd. No. | Date | Comments |
|---|---|---|
| | | |
| | | |
| | | |
| | | |

© BSI 25 January 2002

ISBN 0 580 38019 X

Documents
Document Sharing Hub

Full document details: BS EN ISO 13406-2:2002

EUROPEAN STANDARD

NORME EUROPÉENNE

EUROPÄISCHE NORM

# EN ISO 13406-2

December 2001

ICS 13.180; 35.180

English version

# Ergonomic requirements for work with visual displays based on flat panels - Part 2: Ergonomic requirements for flat panel displays (ISO 13406-2:2001)

Exigences ergonomiques pour travail sur écrans de visualisation à panneau plat - Partie 2: Exigences ergonomiques des écrans à panneau plat (ISO 13406-2:2001)

This European Standard was approved by CEN on 4 February 2001.

CEN members are bound to comply with the CEN/CENELEC Internal Regulations which stipulate the conditions for giving this European Standard the status of a national standard without any alteration. Up-to-date lists and bibliographical references concerning such national standards may be obtained on application to the Management Centre or to any CEN member.

This European Standard exists in three official versions (English, French, German). A version in any other language made by translation under the responsibility of a CEN member into its own language and notified to the Management Centre has the same status as the official versions.

CEN members are the national standards bodies of Austria, Belgium, Czech Republic, Denmark, Finland, France, Germany, Greece, Iceland, Ireland, Italy, Luxembourg, Netherlands, Norway, Portugal, Spain, Sweden, Switzerland and United Kingdom.

EUROPEAN COMMITTEE FOR STANDARDIZATION
COMITÉ EUROPÉEN DE NORMALISATION
EUROPÄISCHES KOMITEE FÜR NORMUNG

**Management Centre: rue de Stassart, 36 B-1050 Brussels**

© 2001 CEN All rights of exploitation in any form and by any means reserved worldwide for CEN national Members.

Ref. No. EN ISO 13406-2:2001 E

Documents
Document Sharing Hub

Full document details: BS EN ISO 13406-2:2002

## Foreword

The text of the International Standard ISO 13406-2:2001 has been prepared by Technical Committee ISO/TC 159 "Ergonomics" in collaboration with Technical Committee CEN/TC 122 "Ergonomics", the secretariat of which is held by DIN.

This European Standard shall be given the status of a national standard, either by publication of an identical text or by endorsement, at the latest by June 2002, and conflicting national standards shall be withdrawn at the latest by June 2002.

According to the CEN/CENELEC Internal Regulations, the national standards organizations of the following countries are bound to implement this European Standard: Austria, Belgium, Czech Republic, Denmark, Finland, France, Germany, Greece, Iceland, Ireland, Italy, Luxembourg, Netherlands, Norway, Portugal, Spain, Sweden, Switzerland and the United Kingdom.

## Endorsement notice

The text of the International Standard ISO 13406-2:2001 was approved by CEN as a European Standard without any modification.

NOTE: Normative references to International Standards are listed in annex ZA (normative).

Documents
Document Sharing Hub

Full document details: BS EN ISO 13406-2:2002

EN ISO 13406–2:2001

# INTERNATIONAL STANDARD

# ISO 13406-2

First edition
2001-12-01

## Ergonomic requirements for work with visual displays based on flat panels —

## Part 2: Ergonomic requirements for flat panel displays

*Exigences ergonomiques pour travail sur écrans de visualisation à panneau plat —*

*Partie 2: Exigences ergonomiques des écrans à panneau plat*

Reference number
ISO 13406-2:2001(E)

Documents
Document Sharing Hub

Full document details: BS EN ISO 13406-2:2002

Documents
Document Sharing Hub
Full document details: BS EN ISO 13406-2:2002

# Contents

Page


Foreword ..... v

Introduction ..... vi

1 Scope ..... 1

2 Normative references ..... 2

3 Definitions ..... 2
3.1 Photometry ..... 2
3.2 Colorimetry ..... 4
3.3 Geometry ..... 7
3.4 Display technology ..... 10
3.5 Alphanumeric symbols ..... 15

4 Symbols ..... 17

5 Guiding principles ..... 22

6 Performance requirements ..... 23

7 Design requirements and recommendations ..... 23
7.1 Design viewing distance ..... 23
7.2 Design viewing direction ..... 24
7.3 Design screen illuminance ..... 28
7.4 Gaze and head-tilt angles ..... 28
7.5 Chromaticity uniformity difference (See Figure 15) ..... 28
7.6 Character height ..... 29
7.7 Stroke width ..... 30
7.8 Character width-to-height ratio ..... 30
7.9 Fill factor ..... 30
7.10 Character format ..... 31
7.11 Between-character spacing ..... 31
7.12 Between-word spacing ..... 31
7.13 Between-line spacing ..... 31
7.14 Display luminance ..... 32
7.15 Contrast (See Figure 19) ..... 33
7.16 Luminance balance ..... 34
7.17 Reflections (See Figure 21) ..... 34
7.18 Image polarity ..... 37
7.19 Luminance uniformity (See Figure 24 and Table 14) ..... 37
7.20 Pixel faults ..... 38
7.21 Image formation time ..... 38
7.22 Absolute luminance coding ..... 39
7.23 Blink coding ..... 39
7.24 Temporal instability (flicker) ..... 39
7.25 Default colour set ..... 39
7.26 Multicolour object size ..... 39
7.27 Colour differences ..... 40
7.28 Spectrally extreme colours ..... 40
7.29 Number of colours ..... 41

8 Measurements ..... 41
8.1 Introduction ..... 41
8.2 Supplier requirements ..... 42
8.3 Test laboratory requirements ..... 45
8.4 Test geometry ..... 56


Documents
Document Sharing Hub



Full document details: BS EN ISO 13406-2:2002

**8.5 Combined measurement for character design analysis** ..... **65**
**8.6 Combined measurement for luminance, contrast and diffuse illumination** ..... **66**
**8.7 Requirement evaluations** ..... **69**

**9 Compliance** ..... **109**

**Annex A** (informative) **Colour difference calculation** ..... **111**

**Annex B** (informative) **Flicker determination** ..... **114**

**Annex C** (informative) **Bidirectional Reflectance Distribution Function (BRDF)** ..... **123**

**Bibliography** ..... **140**



Documents
Document Sharing Hub

Full document details: BS EN ISO 13406-2:2002

## Foreword

ISO (the International Organization for Standardization) is a worldwide federation of national standards bodies (ISO member bodies). The work of preparing International Standards is normally carried out through ISO technical committees. Each member body interested in a subject for which a technical committee has been established has the right to be represented on that committee. International organizations, governmental and non-governmental, in liaison with ISO, also take part in the work. ISO collaborates closely with the International Electrotechnical Commission (IEC) on all matters of electrotechnical standardization.

International Standards are drafted in accordance with the rules given in the ISO/IEC Directives, Part 3.

Draft International Standards adopted by the technical committees are circulated to the member bodies for voting. Publication as an International Standard requires approval by at least 75 % of the member bodies casting a vote.

Attention is drawn to the possibility that some of the elements of this part of ISO 13406 may be the subject of patent rights. ISO shall not be held responsible for identifying any or all such patent rights.

International Standard ISO 13406-2 was prepared by Technical Committee ISO/TC 159, *Ergonomics*, Subcommittee SC 4, *Ergonomics of human-system interaction*.

ISO 13406 consists of the following parts, under the general title *Ergonomic requirements for work with visual displays based on flat panels*:

— *Part 1: Introduction*

— *Part 2: Ergonomic requirements for flat panel displays*

Annexes A, B and C of this part of ISO 13406 are for information only.

Documents
Document Sharing Hub



Full document details: BS EN ISO 13406-2:2002

## Introduction

ISO 13406 extends its companion standard ISO 9241 to account for the significant differences in ergonomic trade offs present when flat panels are used.

The rationale for this part of ISO 13406 is presented in ISO 13406-1.

This part of ISO 13406 presents the requirements for visual display units (VDUs) based on flat panels as defined in ISO 13406-1. It is intended for evaluators and users of this technology. Some document users will find part of the material complex. Notes, figures and examples are provided to lessen the problem. The legibility of flat panels is a principal concern. The requirements are primarily based on the visual ergonomic research used in ISO 9241-3 and on new research referenced in this part of ISO 13406. Here, as in ISO 9241-3, some requirements are based on visual comfort, muscular comfort and user acceptability. This part of ISO 13406 includes requirements and recommendations that are based on legibility, comfort and acceptability that arise when multicolour displays are used, based on the visual ergonomic research described in ISO 9241-8, but modified and extended to consider the unique trade offs of flat panels. Legibility in the presence of ambient room light and the acceptability of unwanted reflected images are addressed covering the flat panel aspects covered in ISO 9241-7 for cathode ray tube (CRT) technology.

*Clause 3 Definitions* presents or recalls those terms needed to specify requirements and measurements. Where possible, definitions taken from other publications are quoted verbatim. If some change has been made, the definition is followed by a note stating “Adopted from ISO xxxx:date,x.x”. Since this part of ISO 13406 often relies on mathematical models and physical measurements to ensure the fitness of purpose of flat panel VDUs, a clause 8 (Symbols) is presented as a convenient reference.

Guiding principles and performance requirements’ clauses modelled on ISO 9241-3 are presented to remind document users of the foundations of the work.

Design requirements and recommendations present the physical attributes that are to be strictly followed to conform (indicated by the word: shall) or preferred but not necessarily required (indicated by the word: should). The topics of design viewing distance, design viewing direction and design screen illumination depart somewhat from the precedents of ISO 9241-3. Two reasons exist:

a) an important type of flat panel has viewing characteristics that require more careful control and consideration of viewing direction than considered in ISO 9241-3;

b) there is no basis to assume that a flat panel VDU is tabletop mounted. These topics are presented as ergonomically constrained, supplier-specifications. This is not unprecedented, viewing distance was handled this way in ISO 9241-3. Once specified, these requirements become the conditions under which all other attributes are to be measured or decided.

A departure from ISO 9241-3 is the use of area-luminance. For CRT technology, the addressed locations are generally close together so that a *high-low-high-low-high-low*-pixel pattern will exhibit less contrast than a sparse pattern. Since the flat-panel pixel area is less than 100 % optically modulated (the fill factor is less than 1), the difference between sparse and dense pattern contrast is minor. The luminance determination has to be complicated by the need for viewing direction precision. The use of area-luminance simplification offsets that somewhat.

Some requirements are presented in categories. For example, some flat panels exhibit long image-formation times. For static images, such panels are ergonomically acceptable without reservation. Not all modern applications rely solely on such static images. Requirement categories are therefore established. If the supplied equipment has such a limitation, the supplier/evaluator is required to identify it. The system integrator, purchaser or user then can consider whether the category is consistent with intended applications.



Documents
Document Sharing Hub
Full document details: BS EN ISO 13406-2:2002

Clause 8 covering measurements is intended for evaluators of flat panel VDUs. The panel surface is sampled for evaluation. Three evaluation sites are chosen and measured, and compliance decisions can be made from these measurements. Panels with large requirement margins do not require precision-evaluation equipment but panels with small margins can.

Clause 9 covering compliance is closely modelled on ISO 9241-3. The alternative test (Visual performance and comfort test) prepared as a normative annex in an amendment to ISO 9241-3, is cited as an alternative compliance route.

Annex A provides additional information on colour difference. Annex B extends the analytic flicker determination method of ISO 9241-3 to luminance-time modulation that is not CRT-like. Annex C informs the users of this International Standard of new work on an alternate modelling method for screens with reflection properties that cannot be adequately modelled with a simple combination of luminance coefficient (diffuse reflection) and luminance factor (specular or regular reflection) and standardized assumptions about the environment. This method develops the bidirectional reflection distribution function. When this work progresses further, it can possibly become a normative method and replace the method in clause 8. The bibliography cites references.

Documents
Document Sharing Hub



Full document details: BS EN ISO 13406-2:2002

Documents
Document Sharing Hub

Full document details: BS EN ISO 13406-2:2002

# Ergonomic requirements for work with visual displays based on flat panels —

## Part 2:
## Ergonomic requirements for flat panel displays

### 1 Scope

This part of ISO 13406

— establishes ergonomic image-quality requirements for the design and evaluation of flat panel displays,

— defines terms needed to address image quality on flat panel displays,

— specifies methods of determining image quality on flat panel displays, and

— establishes ergonomic principles for guiding these requirements.

This part of ISO 13406 is applicable to

— flat panel display screens when used to perform office tasks,

— flat panel display screens that consist of a regular array of picture elements arranged in evenly spaced rows without built-in gaps,

— the presentation of fonts based on Latin-, Cyrillic- and Greek-origin alphabetic characters and Arabic numerals on flat panel display screens,

— the presentation of Asian characters, and

— flat panel display screens that are large enough to display at least 40 Latin-origin characters.

This part of ISO 13406 is not applicable to

— flat panel technology applied to a display that uses optics to form an image that is not the same size as the electro-optical transducer (projection applications of flat panel displays), or

— flat panel technology applied to a display limited to fixed-messages or segmented alphanumerics. [See 2.13 IEC SC 47C (Central Office) 3:1992].

NOTE Some of the measurement methods (e.g. contrast and luminance) in this part of ISO 13406 are not applicable for reflective flat panels. When technology has developed, appropriate measurement methods will be added to this part of ISO 13406.

Documents
Document Sharing Hub



Full document details: BS EN ISO 13406-2:2002

## 2 Normative references

The following normative documents contain provisions which, through reference in this text, constitute provisions of this part of ISO 13406. For dated references, subsequent amendments to, or revisions of, any of these publications do not apply. However, parties to agreements based on this part of ISO 13406 are encouraged to investigate the possibility of applying the most recent editions of the normative documents indicated below. For undated references, the latest edition of the normative document referred to applies. Members of ISO and IEC maintain registers of currently valid International Standards.

CIE Publication No. 15.2:1986, *Colorimetry*. (Central Bureau of the Commission International d'Éclairage CIE), Vienna, Austria.

ISO 9241-3:1992, *Ergonomic requirements for office work with visual display terminals (VDTs) — Part 3: Visual display requirements*.

ISO 9241-6, *Ergonomic requirements for office work with visual display terminals (VDTs) — Part 6: Guidance on the work environment.*

ISO 9241-7, *Ergonomic requirements for office work with visual display terminals (VDTs) — Part 7: Requirements for display with reflections*.

ISO 9241-8:1997, *Ergonomic requirements for office work with visual display terminals (VDTs) — Part 8: Requirements for displayed colours.*

## 3 Definitions

For the purposes of this part of ISO 13406, the following definitions apply.

NOTE The symbols used in certain definitions are explained in clause 4.

### 3.1 Photometry

**3.1.1**
**area-luminance**
luminance of an area of the screen that has a diameter of at least 10 pixels, such that the state of an individual pixel has less than 2 % effect

NOTE Area-luminance is expressed in candelas per square metre (cd/m$^2$).

**3.1.2**
**background luminance**
luminance of an area of the screen with no graphic images present

NOTE Background luminance is expressed in candelas per square metre (cd/m$^2$).

**3.1.3**
**contrast**
⟨in a perceptual sense⟩ assessment of the difference in appearance of two or more parts of a field seen simultaneously or successively (hence: brightness contrast, lightness contrast, colour contrast, etc.)

NOTE Adapted from IEC 60050 (845-02-47):1987.

**3.1.4**
**EUT**
Equipment Under Test



Documents
Document Sharing Hub
Full document details: BS EN ISO 13406-2:2002

**3.1.5**
**Lambert's (cosine) law**
for a surface element whose radiance or luminance is the same in all directions of the hemisphere above the surface:

$$I(\theta) = I_n \cos(\theta) \quad (1)$$

Where $I(\theta)$ and $I_n$ are the radiant or luminous intensities of the surface element in a direction at an angle $\theta$ from the normal to the surface and in the direction of that normal, respectively

[IEC 60050 (845-04-56):1987]

**3.1.6**
**Lambertian surface**
ideal surface for which the radiation coming from that surface is distributed angularly according to Lambert's cosine law

[IEC 60050 (845-04-57):1987]

For an ideal diffuse reflectance standard:

$$\rho_{\mathrm{STD}} = \pi \cdot q_{\mathrm{STD}} \quad (2)$$

**3.1.7**
**luminance contrast**
ratio between the higher, $L_{\mathrm{H}}$ and lower, $L_{\mathrm{L}}$, luminances that define the feature to be detected, measured by contrast modulation ($C_{\mathrm{m}}$) defined as:

$$C_{\mathrm{m}} = \frac{L_{\mathrm{H}} - L_{\mathrm{L}}}{L_{\mathrm{H}} + L_{\mathrm{L}}} \quad (3)$$

or contrast ratio (CR), defined as:

$$\mathrm{CR} = \frac{L_{\mathrm{H}}}{L_{\mathrm{L}}} \quad (4)$$

NOTE 1 For flat panels, area-luminance targets can be used to approximate the luminances that define the feature to be detected because pixels are discrete.

NOTE 2 Adapted from ISO 9241-3:1992, 2.22.

**3.1.8**
**luminance coefficient (at a surface element, in a given direction, under specified conditions of illumination)**
$q_{\mathrm{v}}$, $q$
quotient of the luminance of the surface element in the given direction by the illuminance of the medium

NOTE 1 The luminance coefficient is expressed in reciprocal steradians.

NOTE 2 Adapted from IEC 60050 (845-04-71):1987.

$$q = \frac{L}{E} \quad (5)$$



Documents
Document Sharing Hub
Full document details: BS EN ISO 13406-2:2002

**3.1.9**
**luminance factor (at a surface element of a non-self-radiating medium, in a given direction, under specified conditions of illumination)**
$\beta_v$, $\beta$
ratio of the luminance of the surface element in the given direction to that of a perfect reflecting or transmitting diffuser identically illuminated

$$\beta = \frac{L_{\text{sample}}}{L_{\text{perfect diffuser}}} \tag{6}$$

NOTE 1 The luminance factor is expressed as unit: 1

NOTE 2 Adapted from IEC 60050 (845-04-69):1987.

**3.1.10**
**optically anisotropic surface**
optical surface for which the radiation deviates from that of a Lambertian surface by more than 10 % at any inclination angle, $\theta < 45°$

## 3.2 Colorimetry

**3.2.1**
**CIE 1976 $L^*u^*v^*$ colour space**
**CIELUV colour space**
three-dimensional, approximately uniform colour space produced by plotting in rectangular coordinates $L^*$, $u^*$, $v^*$ quantities defined by the three equations:

$$\left.\begin{aligned} L^* &= 116\,(Y/Y_n)^{\frac{1}{3}} - 16, \text{ when } Y/Y_n > 0{,}008\,856 \\ L^* &= 903{,}3\,(Y/Y_n), \text{ when } Y/Y_n \leqslant 0{,}008\,856 \\ u^* &= 13L^*(u' - u'_n) \\ v^* &= 13L^*(v' - v'_n) \end{aligned}\right\} \tag{7}$$

$Y$, $u'$, $v'$ describe the colour stimulus considered and $Y_n$, $u'_n$, $v'_n$ describe a specified white achromatic stimulus.

NOTE Approximate correlates of lightness, saturation, chroma and hue may be calculated as follows:

CIE 1976 $u$, $v$ *saturation* $s_{uv} = 13\left[(u' - u'_n)^2 + (v' - v'_n)^2\right]^2$ (8)

CIE 1976 $u$, $v$ *chroma* $C^*_{uv} = \left[u^{*2} + v^{*2}\right]^{\frac{1}{2}} = L^* s_{uv}$ (9)

CIE 1976 $u$, $v$ *hue-angle*

$$h_{uv} = \arctan\left(\frac{v' - v'_n}{u' - u'_n}\right) = \arctan\left(\frac{v^*}{u^*}\right), \text{ such that}$$

$$\begin{aligned} 0° \leqslant h_{uv} < 90°, &\ \textit{if}\ \ v^* \geqslant 0 \ \text{ and } u^* \geqslant 0 \\ 90° \leqslant h_{uv} < 180°, &\ \textit{if}\ \ v^* \geqslant 0 \ \text{ and } u^* < 0 \\ 180° \leqslant h_{uv} < 270°, &\ \textit{if}\ \ v^* < 0 \ \text{ and } u^* < 0 \\ 270° \leqslant h_{uv} < 360°, &\ \textit{if}\ \ v^* < 0 \ \text{ and } u^* \geqslant 0 \end{aligned} \tag{10}$$

[IEC 60050 (845-03-54)]



Documents
Document Sharing Hub
Full document details: BS EN ISO 13406-2:2002

**3.2.2**
**CIE 1976 uniform-chromaticity scale diagram**
**CIE 1976 UCS diagram**
uniform-chromaticity-scale diagram produced by plotting in rectangular coordinates $v'$ against $u'$, quantities defined by the equations (11):

$$u' = \frac{4X}{X+15Y+3Z} = \frac{4x}{-2x+12y+3}$$
$$v' = \frac{9Y}{X+15Y+3Z} = \frac{9y}{-2x+12y+3} \qquad (11)$$

See Figure 1 and IEC 60050 (845-03-53).

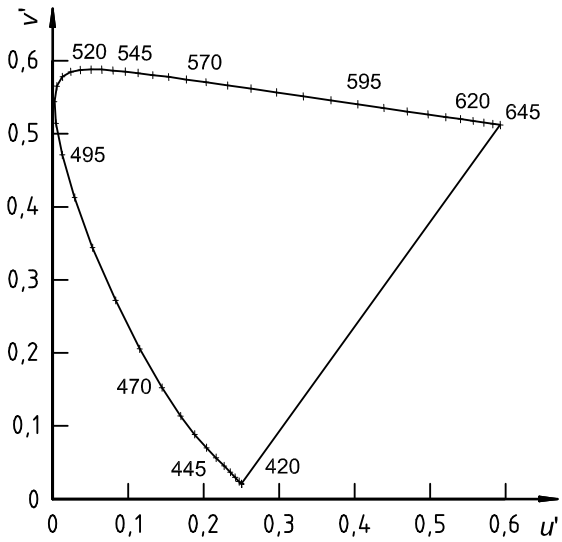


NOTE The curve annotations are wavelengths in nanometers.

**Figure 1 — CIE 1976 UCS Diagram**

**3.2.3**
**CIE 1976 $L^*u^*v^*$ colour difference**
**CIELUV colour difference**
difference between two colour stimuli, defined as the Euclidean distance between the points representing them in the $L^*u^*v^*$ space and calculated as equation:

$$\Delta E^*_{uv} = \left[ \left(\Delta L^*\right)^2 + \left(\Delta u^*\right)^2 + \left(\Delta v^*\right)^2 \right]^{\frac{1}{2}} \qquad (12)$$

The set $X_n$ $Y_n$ $Z_n$ and corresponding $u'_n$ $v'_n$ define the colour of the nominally white object-colour stimulus.

(See CIE Publication No. 15.2.)

[IEC 60050 (845-03-55)]



Documents
Document Sharing Hub
Full document details: BS EN ISO 13406-2:2002

**3.2.4**
**chromaticity uniformity difference**
distance on the CIE 1976 UCS diagram

$$\Delta u'v' = \sqrt{(u'_1 - u'_2)^2 + (v'_1 - v'_2)^2} \tag{13}$$

where

$u'_1, v'_1$ and $u'_2, v'_2$ are the coordinates of the same colour displayed at sites 1 and 2.

NOTE This is the appropriate measure of colour uniformity if luminance is not uniform or if the objects are not adjacent. (See 3.2.2.)

**3.2.5**
**dominant wavelength of a colour stimulus, $\lambda_d$**
wavelength of the monochromatic stimulus that, when additively mixed in suitable proportions with the specified achromatic stimulus, matches the colour stimulus considered

NOTE In the case of purple stimuli, the dominant wavelength is replaced by the complementary wavelength. See IEC 60050 (845-03-44).

**3.2.6**
**same dominant wavelength**
two colours have the same dominant wavelength if the difference between the hue angles of each colour is small

**3.2.7**
**spectrally extreme colours**
spectrally extreme colours are extreme blue and extreme red

NOTE Extreme blue is any colour with $v'$ < 0,2. Extreme red is any colour with $u'$ > 0,4. The extreme regions are illustrated in Figure 2.

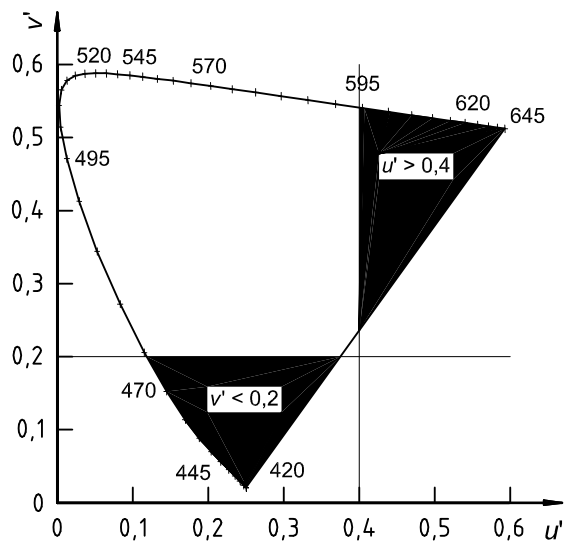


NOTE The curve annotations are wavelengths in nanometers.

**Figure 2 — Extreme red and extreme blue**



Documents
Document Sharing Hub
Full document details: BS EN ISO 13406-2:2002

**3.2.8**
**uniform colour space**
colour space in which equal distances are intended to represent a threshold or suprathreshold perceived colour differences of equal size

[IEC 60050 (845-03-51):1987]

**3.2.9**
**uniform-chromaticity-scale diagram**
UCS diagram
two-dimensional diagram in which the coordinates are defined with the intention of making equal distances represent as nearly as possible equal steps of colour discrimination for colour stimuli of the same luminance throughout the diagram

[IEC 60050 (845-03-52):1987]

## 3.3 Geometry

**3.3.1**
**active area**
part of a display screen area delimited by picture elements [*2.1*, IEC SC 47C(Central Office) 3]

**3.3.2**
**angular subtence**
size of a visual target at a specified viewing distance, e.g. at the design viewing distance

$$\text{Angular subtence in degrees} = 2 \arctan\left(\frac{\text{target height}}{2 \times \text{viewing distance}}\right) \tag{14}$$

$$\text{Angular subtence in minutes of arc} = 60 \times 2 \arctan\left(\frac{\text{target height}}{2 \times \text{viewing distance}}\right) \approx \frac{3\,438 \times \text{target height}}{\text{viewing distance}} \tag{15}$$

NOTE The dimension for angular subtence is degrees (°), which is further divided into minutes of arc (′) and seconds of arc (″).

**3.3.3**
**anisotropic display**
display (usually a liquid crystal display) with emitted luminance and/or luminance coefficient that meets the criterion in 3.1.10

**3.3.4**
**coordinate system**
a normal spherical coordinate system ($r$, $\theta$, $\phi$)

See Figure 3.



Documents
Document Sharing Hub
Full document details: BS EN ISO 13406-2:2002

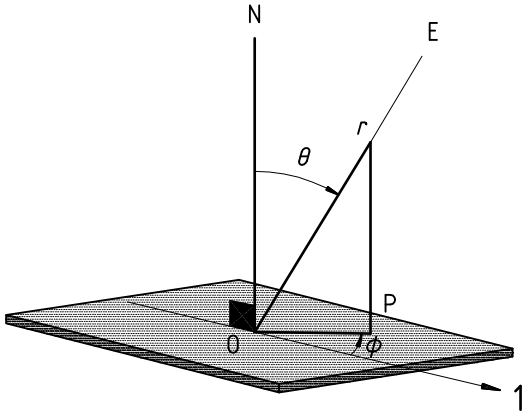


**Key**

E Position of the entrance pupil of the luminance meter

OE = $r$ Working distance

1 $\phi = 0°$ (3 o'clock)

NOTE 1 In some literature, the azimuth is specified by clock positions. 3 o'clock is defined as $\phi = 0°$.

NOTE 2 Normally only positive values for $\theta$ are used. ($-\theta$, $\phi$) is identical to the direction ($+\theta$, $\phi \pm 180°$).

**Figure 3 — Coordinate system**

NOTE 1 The following is a detailed definition of the coordinate system. See Figure 4.

Let a point (pixel or centre of a visual target) be labelled O. Construct a line, from O to the entrance pupil of the measuring instrument, OE, and a line, ON normal to the image plane of the display. The angle from ON to OE in the ON - OE plane is the inclination angle, $\theta$. The distance OE is the radius $r$.

Let P be any point on the line that is formed by the projection of OE on the image plane. Construct a line, OX in that plane to the right of and parallel to the line that bisects the active area horizontally. This is the $X$ axis. The azimuth angle, $\phi$, is the counterclockwise angle between OX and OP.

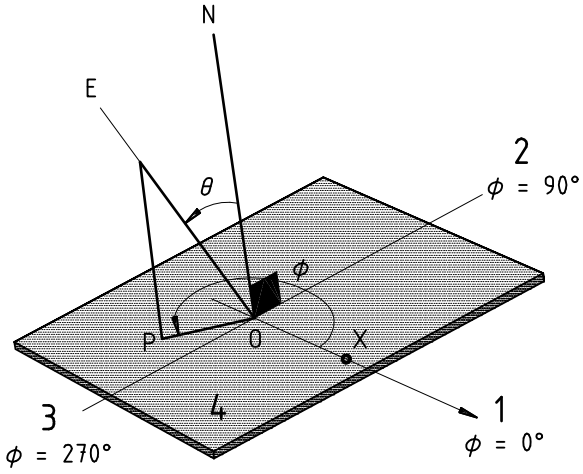


**Key**

1 3 o'clock; right edge of the screen as seen from the user

2 12 o'clock; top edge of the screen as seen from the user

3 6 o'clock; bottom edge of the screen as seen from the user

4 Image surface of the screen

**Figure 4 — Coordinate system - definition**



Documents
Document Sharing Hub
Full document details: BS EN ISO 13406-2:2002

NOTE 2 For more information on coordinates and viewing angles, see VESA Flat Panel Display Measurements Standards (1998), chapter 300-2.

**3.3.5**
**Frankfort plane**
is an imaginary plane through the head established by the lateral extensions of a line between the tragion and the lowest point of the orbit

See Figure 5.

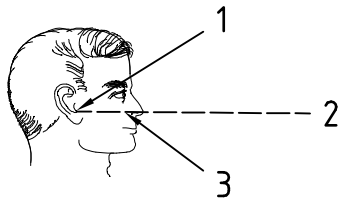


**Key**
1 Tragion
2 Frankfort plane
3 Inferior ridge of the orbit

Orbit is the cavity in the skull that contains the eye. Tragion (or tragus) is the projection of cartilage in the pinna of the outer ear that extends back over the opening of the external auditory meatus.

**Figure 5 — Frankfort plane**

**3.3.6**
**gaze angle**
angle from the Frankfort plane to the plane formed by the pupils and the visual target

See Figure 6.

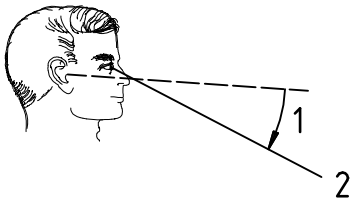


**Key**
1 Gaze angle
2 Line of sight

**Figure 6 — Gaze angle**

NOTE The comfortable range is about 0° to about 45°.

**3.3.7**
**head tilt angle**
angle from the Frankfort plane to the horizontal plane and due to tilt of the head

NOTE When the head is erect, the head tilt angle is about 4°

See Figure 7.

Documents
Document Sharing Hub



Full document details: BS EN ISO 13406-2:2002

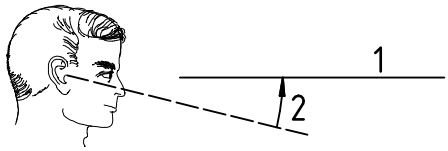


**Key**

1 Horizontal plane

2 Head tilt angle

**Figure 7 — Head tilt angle**

NOTE The comfortable range is about 0° to about 20°.

**3.3.8**
**viewing angle range**
conical space originating at a pixel that includes all viewing directions for which specifications are satisfied

[IEC SC 47C (Central Office) 3]

## 3.4 Display technology

**3.4.1**
**fill factor**
fraction (of the total area geometrically available to a pixel) that can be altered to display information

[ISO 9241-3:1992, 2.15]

**3.4.2**
**emissive display**
display that contains its own source(s) of light

NOTE 1 This light can be produced by the transducer itself or provided by one or more internal light source(s) modulated by the transducer.

NOTE 2 Adapted from 2.4, IEC/SC 47C (Central Office) 3.

**3.4.3**
**gray scale**
a display is said to have gray scale if it can display images demanding more than two luminance levels

[2.4, IEC/SC 47C (Central Office) 3]

**3.4.4**
**image formation time**
time for the relative luminance of a visual object to change from 0,1 to 0,9

NOTE 1 The relative luminance is

$(L - L_{MAX})/(L_{MAX} - L_{MIN})$;

where

$L_{MAX}$ and $L_{MIN}$ are the time averaged highest and lowest luminance states, respectively;

$L$ is the instantaneous luminance.

NOTE 2 The relative luminance is filtered to eliminate temporal variations that are not visually detectable. Image formation time is resolved to the ranges shown in Table 1 and is expressed in milliseconds.



Documents
Document Sharing Hub
Full document details: BS EN ISO 13406-2:2002

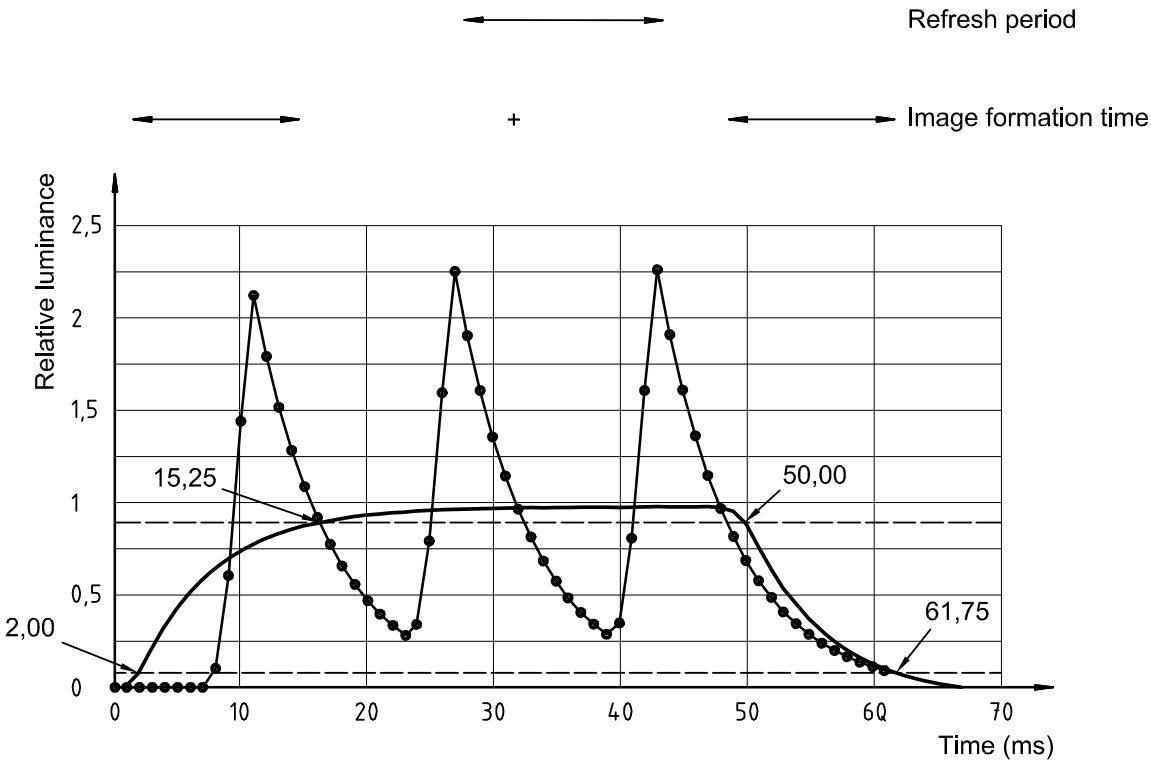


NOTE 1 This illustrates a typical case.

NOTE 2 A constant-luminance back light is assumed (after prefiltering for 4kS/s sampling).

NOTE 3 Figure 8 illustrates the image formation time. The trace with the marks represents the unfiltered luminance time, normalized to a range of 1,0. The bold trace is the first trace filtered to include those frequencies that are psychophysically significant. The image formation time is judged on this trace. In this example, $t_1$ = 2,00 ms is the time recorded at 0,1 of the maximum luminance with the luminance increasing; $t_2$ = 15,25 ms is the time recorded at 0,9 of the maximum luminance with the contrast increasing; $t_3$ = 50,00 ms, is the time recorded at 0,9 of the maximum luminance with the luminance decreasing; and, $t_4$ = 61,75 ms is the time recorded at 0,1 of the maximum luminance with the luminance decreasing. Image formation time is $t_2 - t_1 + (t_4 - t_3)$ = 25 ms. The luminance time is sampled at 4 kS/s, so the precision is ± 0,5 ms.

NOTE 4 For flat panel displays with very fast electro-optic physics, the refresh period is the image formation time.

**Figure 8 — Image formation time**

**Table 1 — Image formation time in milliseconds**

| Time range | Significance |
|---|---|
| $t \leqslant 10$ | Motion artefacts become undetectable at image formation times less than 3 ms. |
| $10 < t \leqslant 55$ | Contrast is stable for most applications. Motion artefacts can be distracting. |
| $55 < t \leqslant 200$ | Applications using scrolling, animation and pointing devices lose detectable contrast. Blink coding from 0,33 Hz to 5 Hz is operable. |
| $t > 200$ | Noticeable loss of contrast observed during key entry, scrolling, animation, and blink coding. Pointing devices with rapid cursor positioning can be used only with special techniques. |

**3.4.5**
**absolute luminance coding**
information presented where the only dimension that is used for visual differentiation is difference in image luminances

Documents
Document Sharing Hub



Full document details: BS EN ISO 13406-2:2002

**3.4.6**
**relative luminance coding**
information presented where either the coded images are touching or the luminance difference is secondary to a primary differentiation such as shape or colour

**3.4.7**
**pixel**
smallest element that is capable of generating the full functionality of the display

**3.4.8**
**pixel pitch**
the distance between corresponding points on adjacent pixels, both horizontally ($H_{pitch}$) and vertically ($V_{pitch}$)

NOTE Pixel pitch is expressed in millimetres.

**3.4.9**
**reflective display**
display device that modulates light from an external source by reflection

[*2.12*, IEC 47 CO 2]

**3.4.10**
**screen tilt angle**
$\alpha$
angle formed by the intersection of the plane tangent to the centre of the display and the horizontal plane

NOTE Screen tilt angle is expressed in degrees.

See Figure 9.

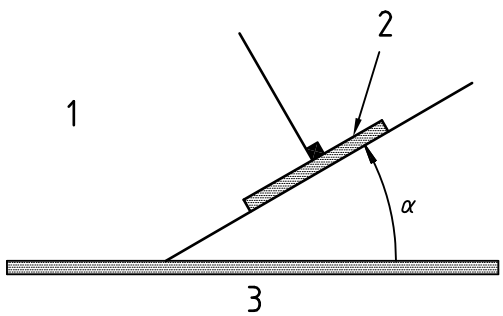


**Key**
1 Viewing side
2 Display
3 Horizontal surface (e.g. a table)

**Figure 9 — Screen tilt angle, $\alpha$**

NOTE $\alpha$ is identical to the angle, $A$ in 6.1.2 of ISO 9241-3:1992.

**3.4.11**
**small-size panel**
a flat panel with a viewing area with the smallest dimension in the range of 1,6° to 4,8° at the design viewing distance and with the largest dimension of at least 4,8° at the design viewing distance

See Figure 10.



Documents
Document Sharing Hub
Full document details: BS EN ISO 13406-2:2002

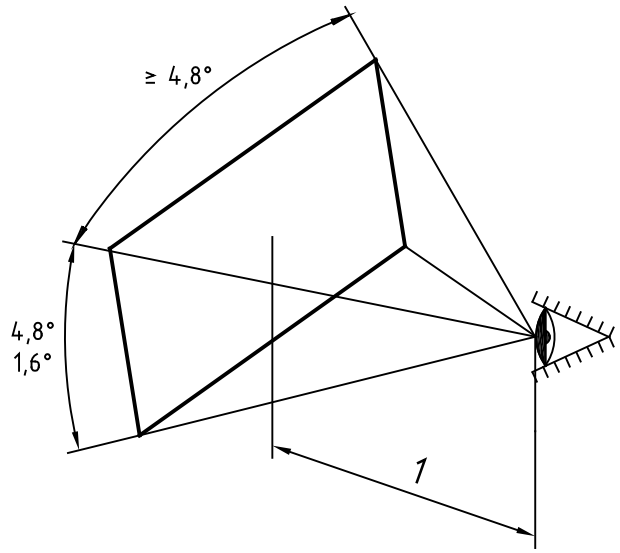


**Key**

1 Design viewing distance

**Figure 10 — Small-size panel**

NOTE 1 Smaller panels will not hold more than 40 complying Latin characters and are outside the scope of the standard. The definition is used in screening and selecting measurement locations only. See *8.4.2* Standard measurement locations.

NOTE 2 For a viewing distance of 500 mm, 1,6° = 14 mm; 4,8° = 42 mm.

**3.4.12**
**subpixel**
a separately addressed internal structure in a pixel that extends the pixel function

NOTE Examples include primary colour subpixels used in some multicolour flat panels and multiple-size subpixels, used to create half-tone-like gray scale effects. Microstructure within primary subpixels is sometimes used to minimize anisotropy or to minimize fault visibility by adding redundancy in flat panels. Such microstructures are still called subpixels in this part of ISO 13406. Display engineering literature often uses the term “dot” which is not used in this part of ISO 13406.

**3.4.13**
**pixel faults**
local defects of types 1, 2 or 3

See Tables 2 and 3.

Documents
Document Sharing Hub



Full document details: BS EN ISO 13406-2:2002

**Table 2 — Pixel faults**

| Fault type | Description |
|---|---|
| Type 1 fault | Pixel in stuck high state<br>(when system command = minimum luminance) ($L > 0{,}75\ L_X + 0{,}25\ L_N$) |
| Type 2 fault | Pixel in stuck low state<br>(when system command = maximum luminance) ($L < 0{,}75\ L_N + 0{,}25\ L_X$) |
| Type 3 fault | Pixel or subpixel is abnormal, but not of type 1 or 2.<br>For example, a stuck subpixel or intermittent fault. |
| Fault cluster | Two or more pixels or subpixels with faults within a 5 × 5 block of pixels. |

$L$ is the measured luminance of the pixel.

$L_X$ is the average pixel response to a maximum luminance command (e.g. white).

$L_N$ is the average pixel response to a minimum luminance command (e.g. black).

**Table 3 — Definition of fault classes,** $\text{Class}_{\text{Pixel}}$

| Maximum number of faults per type per million pixels | | | | | |
|---|---|---|---|---|---|
| **Class** | **Type 1** | **Type 2** | **Type 3** | Cluster with more than one type 1 or type 2 faults | Cluster of type 3 faults |
| I | 0,000 | 0,000 | 0,000 | 0,000 | 0,000 |
| II | 2,000 | 2,000 | 5,000 | 0,000 | 2,000 |
| III | 5,000 | 15,00 | 50,00 | 0,000 | 5,000 |
| IV | 50,00 | 150,0 | 500,0 | 5,000 | 50,00 |

**3.4.14**
**transflective display**
display device that modulates light from an external source by reflection and from another source by transmission through a semitransmissive reflector

[*2.15*, IEC/SC 47C (Central Office) 3]

**3.4.15**
**transmissive display**
display that modulates light from an external source by transmission

NOTE If the display has a built-in light source, this part of ISO 13406 treats the display as emissive, not transflective, and not transmissive.

[*2.16*, IEC SC 47C (Central Office) 3]

**3.4.16**
**viewing area**
active area plus any contiguous areas that display permanent visual information or display background

[*2.18*, IEC SC 47C (Central Office) 3]



Documents
Document Sharing Hub
Full document details: BS EN ISO 13406-2:2002

## 3.5 Alphanumeric symbols

NOTE In keeping with the guiding principle that this part of ISO 13406 values consistency with ISO 9241-3, where appropriate, these definitions are identical to those contained in ISO 9241-3. If there is a departure from the original definition, the definition is followed by a note stating "Adapted from ISO 9241-3...". Departures are based on the use of whole pixel spaces to judge object sizes. It is now common to have the capability to display more than one character font design. This change results in an acceptably small error, but allows many fonts to be evaluated without complex laboratory work.

**3.5.1**
**anti-aliased font**
alphanumeric characters in which a technique has been utilized to smooth character edges

[ISO 9241-3:1992, 2.2]

**3.5.2**
**between-character space**
distance between horizontally adjacent characters at their nearest points in whole pixel spaces

NOTE 1 Between-character space is expressed in pixels.

NOTE 2 Adapted from ISO 9241-3:1992, 2.3.

**3.5.3**
**between-line spacing**
distance between vertically adjacent characters at their nearest points in whole pixel spaces

NOTE 1 Between-line spacing is expressed in pixels.

NOTE 2 Adapted from ISO 9241-3:1992, 2.4.

**3.5.4**
**between-word spacing**
horizontal distance between adjacent words at their nearest points in whole pixel spaces

NOTE 1 Between-word spacing is expressed in pixels.

NOTE 2 Adapted from ISO 9241-3:1992, 2.5.

**3.5.5**
**character format**
number of horizontal and vertical elements (pixels) in the matrix used to form a single character

NOTE 1 Character format is expressed in pixels.

NOTE 2 Adapted from ISO 9241-3:1992, 2.7.

**3.5.6**
**character height**
$\psi$
distance, as the subtended angle, of the spaces in whole pixel between the top and bottom edges of a non-accented capital letter H

NOTE 1 Character height is expressed in degrees.

NOTE 2 Adapted from ISO 9241-3:1992, 2.8.

$$\psi = \frac{180 \times 60 \times V_{\text{pitch}} \times N_{\text{H,Height}}}{\pi \times D_{\text{view}}} \qquad (16)$$

AVA Documents
Document Sharing Hub



Full document details: BS EN ISO 13406-2:2002

$$\approx \frac{3\,438 \times V_{\text{pitch}} \times N_{\text{H,Height}}}{D_{\text{view}}} \tag{17}$$

NOTE 3 The unit in equations (16) and (17) is ′ (minutes of arc). Minutes of arc is converted to degrees of arc by the factor (1°/60′). Degrees of arc is converted to radians by the factor (π/180°).

**3.5.7**
**character width**
horizontal distance between the edges at the widest part of an unaccented capital letter H (excluding serifs), measured in whole pixel spaces

NOTE 1 Character width is expressed in pixels.

NOTE 2 Adapted from ISO 9241-3:1992, 2.10.

**3.5.8**
**character width-to-height ratio**
ratio of character width to character height

NOTE Character width-to-height ratio is expressed in pixels.

[ISO 9241-3:1992, 2.11]

**3.5.9**
**stroke width**
average dimension of the horizontal and vertical edge-to-edge distance of a character stroke, judged by the number of whole, average pixel spaces in each

NOTE Stroke width is compressed in pixels.

**3.5.10**
**legibility**
ability for unambiguous identification of single characters or symbols that may be presented in a non-contextual format

**3.5.11**
**readability**
characteristics of a text presentation on a display that effect performance when groups of characters are to be easily discriminated, recognized and interpreted

**3.5.12**
**character height number**
$N_{\text{H,Height}}$
number of pixels in the height of an unaccented, uppercase character H

NOTE Character height number is expressed in pixels.



Documents
Document Sharing Hub
Full document details: BS EN ISO 13406-2:2002

## 4 Symbols

**Table 4 — Main symbols and units**

See Tables 5 and 6 for more variable conventions.

| Symbol | Name/Description | Units |
|---|---|---|
| $AMP_n$ | $\frac{2 \times \lvert C_n \rvert}{C_0}$ | 1 |
| $c_0$ | Time-averaged dark-room luminance | cd/m$^2$ |
| $Class_{Pixel}$ | Pixel fault class, see *7.20 Pixel faults* | |
| $Class_{Reflection}$ | Reflection class, see *7.17 Reflections* | |
| $Class_{Viewing}$ | Viewing direction range class, see *7.2 Design viewing direction* | |
| $C_m$ | Contrast modulation | 1 |
| $c_n$ | The $n$th complex Fourier coefficient (at a multiple of the fundamental frequency) | cd/m$^2$ |
| CR | Contrast ratio | 1 |
| $D_{active}$ | The diagonal of the active area of the screen | mm |
| $D_{design\ view}$ | Design viewing distance (specified) | mm |
| $D_{view}$ | The distance between the entrance pupil of the measurement instrument and the centre of the considered object on the screen. The distance between the bridge of the nose of the viewer and the centre of the screen | mm |
| $E$ | Illuminance | lx |
| $E_a$ | Screen illuminance from ambient lighting at a workplace | lx |
| $E_{obs}$ | Observed retinal illuminance | td |
| $E_{pred}$ | Retinal illuminance where flicker occurs (at a specific frequency) | td |
| $E_s$ | Design screen illuminance | lx |
| FFT(v) | The Fast Fourier Transform of a vector of readings | 1 |
| $f_n$ | $n$ × the fundamental frequency | Hz |
| $H_{pitch}$ | The horizontal pixel pitch | mm |
| $h_{uv}$ | hue-angle | ° |
| $H_{view}$ | the height of the active area | mm |
| $L^*$ | Lightness | 1 |
| $L_1$ | First luminance [$L_{dark,HS(CL-0)}$] | cd/m$^2$ |
| $L_2$ | Second luminance [$L_{dark,LS(CL-0)}$] | cd/m$^2$ |
| $L_{Ea,task\ area(TA-n)}$ | Area luminance of a task area (numbered $n$), with ambient lighting of the workplace | cd/m$^2$ |

AVA Documents
Document Sharing Hub



Full document details: BS EN ISO 13406-2:2002

**Table 4** *(continued)*

| Symbol | Name/Description | Units |
|---|---|---|
| $L_{FPA(t)}$ | Frame-period averaged luminance-time response function | |
| $L_{level,max}$ | The biggest luminance value of any test location in any test direction at the luminance code level | cd/m$^2$ |
| $L_{level,min}$ | The smallest luminance value of any test location in any test direction at the luminance code level | cd/m$^2$ |
| $L_{max}$ | The biggest of a series of luminance values | cd/m$^2$ |
| $L_{min}$ | The smallest of a series of luminance values | cd/m$^2$ |
| $L_{REFEXT-I}$ | Evaluation luminance level for extended specular source, class I and II | cd/m$^2$ |
| $L_{REFEXT-III}$ | Evaluation luminance level for extended specular source, class III | cd/m$^2$ |
| $L_{REFSML-I}$ | Evaluation luminance level for small specular source, class I and II | cd/m$^2$ |
| $L_{REFSML-III}$ | Evaluation luminance level for small specular source, class III | cd/m$^2$ |
| $N_H$ | The number of columns of pixels on the screen | 1 |
| $N_{H,\ Width}$ | The number of pixels in the *width* of an unaccented uppercase character H | pixels |
| $N_{H,Height}$ | The number of pixels in the *height* of an unaccented uppercase character H | pixels |
| $N_{H,hz_stroke}$ | The number of pixels in the *horizontal stroke* of an unaccented uppercase character H | pixels |
| $N_{H,vt_stroke}$ | The number of pixels in the *vertical stroke* of an unaccented uppercase character H | pixels |
| $N_V$ | The number of rows of pixels on the screen | 1 |
| $q$ | Luminance coefficient | sr$^{-1}$ |
| $r$ | The radius of the exit port of the specular light source | mm |
| $S_{Es,Es}(\lambda)$ | The spectral distribution of the design screen illumination, $E_s$ | 1 |
| $T$ | Refresh period | ms |
| $t_1$ | Time at $L_1 - 0{,}1(L_1 - L_2)$, state 1 → 2 | ms |
| $t_2$ | Time at $L_1 - 0{,}9(L_1 - L_2)$ | ms |
| $t_3$ | Time at $L_1 - 0{,}1(L_1 - L_2)$, state 2 → 1 | ms |
| $t_4$ | Time at $L_1 - 0{,}9(L_1 - L_2)$ | ms |
| *Tol* | Tolerance | 1 |



Documents
Document Sharing Hub
Full document details: BS EN ISO 13406-2:2002

**Table 4** *(continued)*

| Symbol | Name/Description | Units |
|---|---|---|
| $u'$, $v'$<br>$u'_n$, $v'_n$<br>$u'_{Es,Es}$, $v'_{Es,Es}$ | CIE 1976 UCS values, subscript $n$ indicates "specified white achromatic stimulus" and $Es$,$Es$ indicates design screen illumination | 1 |
| $V_{pitch}$ | The vertical pixel pitch | mm |
| $W_{view}$ | The width of the active area | mm |
| $X$, $Y$, $Z$<br>$X_n$, $Y_n$, $Z_n$<br>$X_{Es,Es}$, $Y_{Es,Es}$, $Z_{Es,Es}$ | Tristimulus values of a colour stimulus subscript $n$ indicates "specified white achromatic stimulus" and $Es$,$Es$ indicates design screen illumination | cd/m$^2$ |
| $x$, $y$, $z$<br>$x_n$, $y_n$, $z_n$<br>$x_{Es,Es}$, $y_{Es,Es}$, $z_{Es,Es}$ | Chromaticity coordinates:<br>The ratio of each of the tristimulus values to their sum, subscript $n$ indicates "specified white achromatic stimulus" and $Es$,$Es$ indicates design screen illumination | 1 |
| $Y$, $Y_n$ | 2°, 1931 tristimulus value, subscript $n$ indicates "specified white achromatic stimulus" | cd/m$^2$ |
| $z$ | The distance from the exit port of the light source to the diffuse reflectance standard it is illuminating | mm |
| $\Delta E^*_{uv}$ | 1976 CIE $L^*u^*v^*$ colour difference, CIELUV,<br>1 to 4 targets | — |
| $\Delta u'v'$ | Colour uniformity difference between 2 targets. Widely separated 1° targets with luminance variation allowed | 1 |
| $\alpha$ | Screen tilt angle | ° |
| $\beta$ | The luminance factor (for regular reflection)<br>NOTE Regular = specular, mirror-like | 1 |
| $\beta_{STD}$ | Luminance factor of the specular reflectance standard of the test laboratory | 1 |
| $\phi$ | Azimuth angle | ° |
| $\phi_D$ | Design azimuth angle (either 90° or 270°) | ° |
| $\Psi$ | The height of an unaccented upper case character H | ° |
| $\phi_C$ | Critical azimuth angle | ° |
| $\rho_{STD}$ | Diffuse reflection factor of the diffuse reflectance standard of the test laboratory | 1 |
| $\theta$ | Inclination angle | ° |
| $\theta_D$ | Design inclination angle | ° |
| $\theta_{range}$ | Inclination-angle range | ° |
| $\theta_{rangemax}$ | The maximum inclination angle range | ° |
| $\theta_{rangemin}$ | The minimum inclination-angle range | ° |

Documents
Document Sharing Hub



Full document details: BS EN ISO 13406-2:2002

**Table 4** *(continued)*

| Symbol | Name/Description | Units |
|---|---|---|
| ′ (as a size) | The angular subtense of a visual target at a (specified) viewing distance<br>See *3.3.2, angular substence* | ′ |
| ° (as a size) | The angular subtense of a visual target at a (specified) viewing distance<br>See *3.3.2, angular substence* | ° |

**Table 5 — Arbitrary symbol:** $A_{B,C(D)}(E)$

| Position | Explanation | Example | Explanation for the example |
|---|---|---|---|
| A | Physical quantity | Y | Luminance |
| B | Illumination condition | S-SML | Illuminated with the small specular source condition |
| C | Measured object | HS | Measuring the high state of the flat panel |
| D | Measurement location | CL-2 | In the centre location, at measurement angle 2 |
| E | Tristimulus curve or spectral wavelength | 410 | Wavelength $\lambda$ = 410 nm |
| NOTE If the position E is omitted, then it is not applicable, or refers to the $V(\lambda)$-corrected value (=Y) | | | |

**Table 6 — List of symbols and subscripts**

| Position | Symbol | Explanation |
|---|---|---|
| A | $Y$ | Intermediate luminance values |
| A | $L$ | Final luminance values |
| A | $R$ | Reflectometer value (See ISO 9241-7 for details) |
| A | $S$ | Spectral value |
| A | $q$ | Luminance coefficient |
| A | $u'$ | Chromaticity coordinate in the CIE 1976 UCS diagram |
| A | $v'$ | Chromaticity coordinate in the CIE 1976 UCS diagram |
| A | $\Delta u'v'$ | Chromaticity uniformity difference in the CIE 1976 UCS diagram |
| A | $\beta$ | Luminance factor |
| B | DIFF | Illumination with the diffuse light source of the test laboratory |
| B | S-SML | Illumination with the small specular light source of the test laboratory |
| B | S-EXT | Illumination with the extended specular light source of the test laboratory |
| B | dark | Dark-room conditions |
| B | $E_s$ | Converted to design screen illumination $E_s$ condition |



Documents
Document Sharing Hub
Full document details: BS EN ISO 13406-2:2002

**Table 6** *(continued)*

| Position | Symbol | Explanation |
|---|---|---|
| B | $E_a$ | Screen illumination $E_s$ at a workplace |
| B | REFEXT-I | Converted to large-glare source condition, class I and II |
| B | REFSML-I | Converted to small-glare source condition, class I and II |
| B | $E_s$+REFEXT-I | Converted to simulation of design screen illumination and large-glare source, class I and II |
| B | $E_s$+REFSML-I | Converted to simulation of design screen illumination and small-glare source, class I and II |
| B | REFSML-III | Converted to large-glare source condition, class III |
| B | REFEXT-III | Converted to small-glare source condition, class III |
| B | $E_s$+REFEXT-III | Converted to simulation of design screen illumination and large-glare source, class III |
| B | $E_s$+REFSML-III | Converted to simulation of design screen illumination and small-glare source, class III |
| B | $E_a$+AMBLUM | The combined light from ambient illuminance and the specular light sources at an actual workplace |
| C | HS | Flat panel in high state, photometer focus on the flat panel. In text presentation, HS and LS are the two colours used in the text, i.e. HS and LS can be colours other than black and white. |
| C | LS | Flat panel in low state, photometer focus on the flat panel. In text presentation, HS and LS are the two colours used in the text, i.e. HS and LS can be colours other than black and white. |
| C | HS-F_EXT | Flat panel in high state, photometer focus on the exit port of the extended light source |
| C | LS-F_EXT | Flat panel in low state, photometer focus on the exit port of the extended light source |
| C | HS-F_SML | Flat panel in high state, photometer focus on the exit port of the small light source |
| C | LS-F_SML | Flat panel in low state, photometer focus on the exit port of the small light source |
| C | HS-OFF | Flat panel in high state, backlight switched off. Only applicable to certain types of displays |
| C | LS-OFF | Flat panel in low state, backlight switched off. Only applicable to certain types of displays |
| C | OFF | Flat panel switched off |
| C | level | Flat panel in a specific absolute luminance coding level, numbered 1…$n$ |
| C | level-OFF | Flat panel in specific absolute luminance coding level, backlight switched off. Only applicable to certain types of displays. |
| C | DIFF | The diffuse light source of the test laboratory |
| C | S-SML | The small specular light source of the test laboratory |
| C | S-EXT | The extended specular light source of the test laboratory |
| C | HS-MIN | The required minimum luminance for the high luminance state |

Documents
Document Sharing Hub



Full document details: BS EN ISO 13406-2:2002

**Table 6** *(continued)*

| Position | Symbol | Explanation |
|---|---|---|
| C | Task area | A task area that is frequently viewed in sequence while using the display (document, covers, etc.) |
| C | dSTD | The diffuse reflectance standard of the test laboratory |
| C | sSTD | The specular reflectance standard of the test laboratory |
| C | aSTD | The alignment check standard of the test laboratory |
| C | colour-$n$ | The flat panel in the colour $n$ |
| C | Colour-$n$-OFF | Flat panel in specific colour $n$, backlight switched off. Only applicable to certain types of displays. |
| C | $E$s | Used with position A = $X$, $Y$ or $Z$. Indicates that $X$, $Y$ and $Z$ stand for the tristimulus values of the design screen illumination. |
| D | HL-$n$ | High measurement location, $n$ = 0…7 |
| D | LL-$n$ | Low measurement location $n$ = 0…7 |
| D | CL-$n$ | Centre measurement location, $n$ = 0…7 |
| D | CL-$n$S | Centre measurement location, $n$ = 0…6 used in specular reflection measurements |
| D | CL-$n$D | Centre measurement location, $n$ = 0…6, used in diffuse reflection measurements |
| D | dSTD-$n$Sm | Location for calibration measurement of the diffuse reflectance standard, $n$ = 0…6, $m$ = 15, 30, 45 |
| D | $L_g$ | Location for measuring the luminance of the specular light sources. |
| D | TA-$n$ | Task area location, $n$ = min, max |
| D | T-$n$ | Tolerance measurement location, $n$ = 1...4 |
| D | PL-$n$ | Potential measurement locations, $n$ = 11, 19, 91, 22, 33, 44, 55, 66, 77, 88, 99 |
| D | $m,n$ | Combination of two locations, used in uniformity calculations (e.g. CL1, CL2) |
| E | X | Weighted using the weighting function for CIE 1931 tristimulus coordinate $X$. Used in tristimulus analysis. |
| E | Y | Weighted using the weighting function for CIE 1931 tristimulus coordinate $Y$. This is equal to the weighting function for $V(\lambda)$. |
| E | | If position E is omitted, then the weighting function $V(\lambda)$ is assumed |
| E | Z | Weighted using the weighting function for CIE 1931 tristimulus coordinate $Z$. Used in tristimulus analysis. |
| E | 400, 410, … 700 | The value at wavelength 400, 410, …, 700. Used in spectral analysis. |

## 5 Guiding principles

The visual display work system is an integrated whole, which includes the flat panel display and other hardware (keyboards, pointing devices, etc.), environment, task structure, and other factors. The characteristics of a flat panel must be considered in relation to the other elements of the work system and not as a collection of isolated visual requirements.



Documents
Document Sharing Hub
Full document details: BS EN ISO 13406-2:2002

Design elements often interact such that optimizing one degrades another. For example, in multicolour flat panel displays there are tradeoffs between the palette of available colours and the constancy of colour rendition with viewing direction. Tradeoffs should be made to achieve an acceptable balance.

For viewing efficiency in flat panel display environments, the image quality should be significantly above the threshold values for the individual stimuli. The recommendations of this part of ISO 13406 take this into account.

While many recommendations are based on performance data from the viewpoint of the above paragraph, some recommendations and requirements are based on user comfort.

Application elements, generally embodied in software, and the hardware elements cannot be judged separately. Coding and character formation require hardware capability and consistent application of that capability.

## 6 Performance requirements

The objective of this part of ISO 13406 is that the images presented on flat-panel-based VDUs be legible, readable and comfortable in use. See clause 9 for compliance with this part of ISO 13406 and clause 3 for definitions.

NOTE The terms **legibility** and **readability** are used as defined in ISO 9241-3. Some research uses the same terms for other purposes.

## 7 Design requirements and recommendations

### 7.1 Design viewing distance

Design viewing distance, $D_{\text{design view}}$ shall be not less than 400 mm, however, for certain applications (e.g., soft key labels of touch screens) the design viewing distance may be reduced to 300 mm.

For office work in the context of ISO 9241-3, the recommendations of 5.1 Design viewing distance, of ISO 9241-3:1992 should be followed.

Workstation requirements are the subject of ISO 9241-5. However, in the work place, the design should allow the display to be used with the design viewing distance. If the task requires a significant amount of reading, the design, the application and the work place should be consistent with display viewing at a distance where the character height, $\Psi$, of the character set meets the recommendations of *7.6: character height*, 20′ to 22′ (30′ to 35′ for Asian characters). This relationship is shown in Figure 11.



Documents
Document Sharing Hub
Full document details: BS EN ISO 13406-2:2002

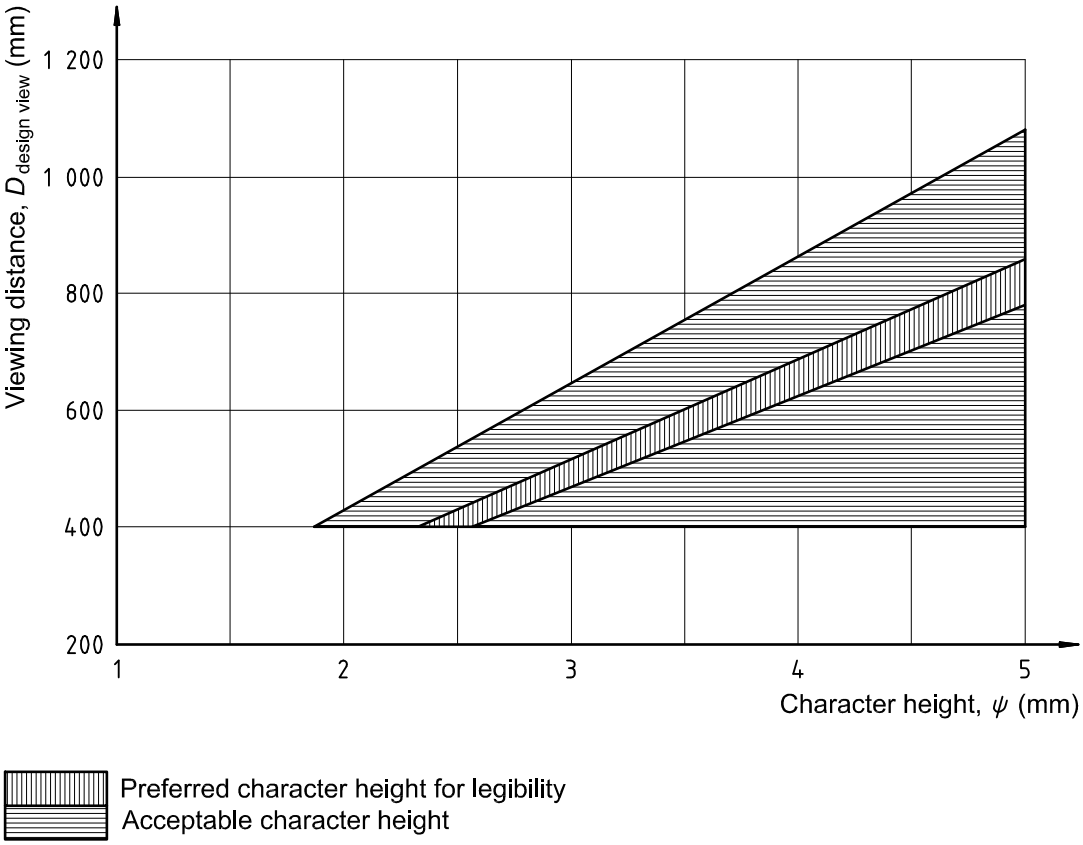


**Figure 11 — Viewing distance — character size relationship**

## 7.2 Design viewing direction

The display shall conform to all optical requirements over a relevant range of viewing directions. The supplier shall specify a design viewing direction ($\theta_D$, $\phi_D$) and an inclination angle range, $\theta_{range}$.

The inclination angle range, $\theta_{range}$, shall exceed a value consistent with the design viewing distance, $D_{design\ view}$ and a character height of $\Psi = 22'$. The design inclination angle, $\theta_D$ shall be larger than 0° (the case of a symmetric viewing cone) and shall be smaller than 40° – $\theta_{range}/2$ (to avoid measurements at angles outside the 80° viewing cone). See Figure 12.

NOTE 1 According to the definition of $\theta_D$, $\theta_D$ can only be in the range 0°-90°. Viewing cone = $\theta_{range}$ is in the range 0°-180°.

The design azimuth angle, $\phi_D$, is 90°, when the supplier intends that the top of the screen be closer to the users' eyes than the bottom, and 270° when the bottom is intended to be closer to the users' eyes and the top of the screen. See Figure 13.

Six directions are used for measurement. See *8.4.1 Test directions.*[1)]

1) At the time this part of ISO 13406 was written, the number of test directions was limited to six in order to make it economically possible to perform a test with the test equipment technology available at that time. Limiting the test to only six directions might not describe the entire performance of a flat panel. From an ergonomics point of view, it might be useful to extend flat panel evaluation to more than six test directions when subclauses *7.14 Display luminance, 7.15 Contrast, 7.17 Reflections, 7.19 Luminance uniformity, 7.25 Default colour set* and *7.27 Colour differences* are evaluated. The relevant azimuth angle range and inclination angle range to analyze depend on, for example, the task, the viewing distance, the screen size and the number of simultaneous users.



Documents
Document Sharing Hub
Full document details: BS EN ISO 13406-2:2002

For ease of understanding, four performance classes for viewing direction range ($Class_{Viewing}$) are defined and referred to in the other requirements:

**Table 7 — Viewing direction range classes,** $Class_{Viewing}$

| **$Class_{Viewing}$** | **Description** |
|---|---|
| I | Allows multiple users to view the whole area of the display at the design viewing distance from any viewing direction within an 80° viewing cone without reduced visual performance.<br>Provides uniformity over the whole screen. Allows movement of the head.<br>Not suitable for tasks where a narrow viewing cone is needed (e.g. privacy, low power consumption). |
| II | Allows a single user to view the whole area of the display at the design viewing distance from any location in front of the screen.<br>Provides uniformity over the whole screen. Allows movement of the head.<br>Not very well suited for tasks where a narrow viewing cone is needed (e.g. privacy, low power consumption). |
| III | Allows a single user to view the whole area of the display at the design viewing distance from one fixed location (the design viewing distance, design viewing direction in front of the centre of the screen).<br>Provides uniformity over the whole screen. Does not allow movement of the head.<br>Suitable for tasks where a narrow viewing cone is needed (e.g. privacy, low power consumption). |
| IV | Allows a single user to view the centre of the screen at the design viewing distance from one fixed location (the design viewing distance, design viewing direction in front of the centre of the screen).<br>Requires user to tilt and rotate the display for uniform image appearance. Does not allow movement of the head.<br>Very well suited for tasks where a narrow viewing cone is needed (e.g. privacy, low power consumption). |
| For some tasks, a narrow viewing direction range is desired. For example, if it is not wanted that co-travellers in a public transport vehicle can see the information on the screen. The selection of $Class_{Viewing}$ is usually an ergonomics task design trade-off decision. | |

AVA Documents
Document Sharing Hub



Full document details: BS EN ISO 13406-2:2002

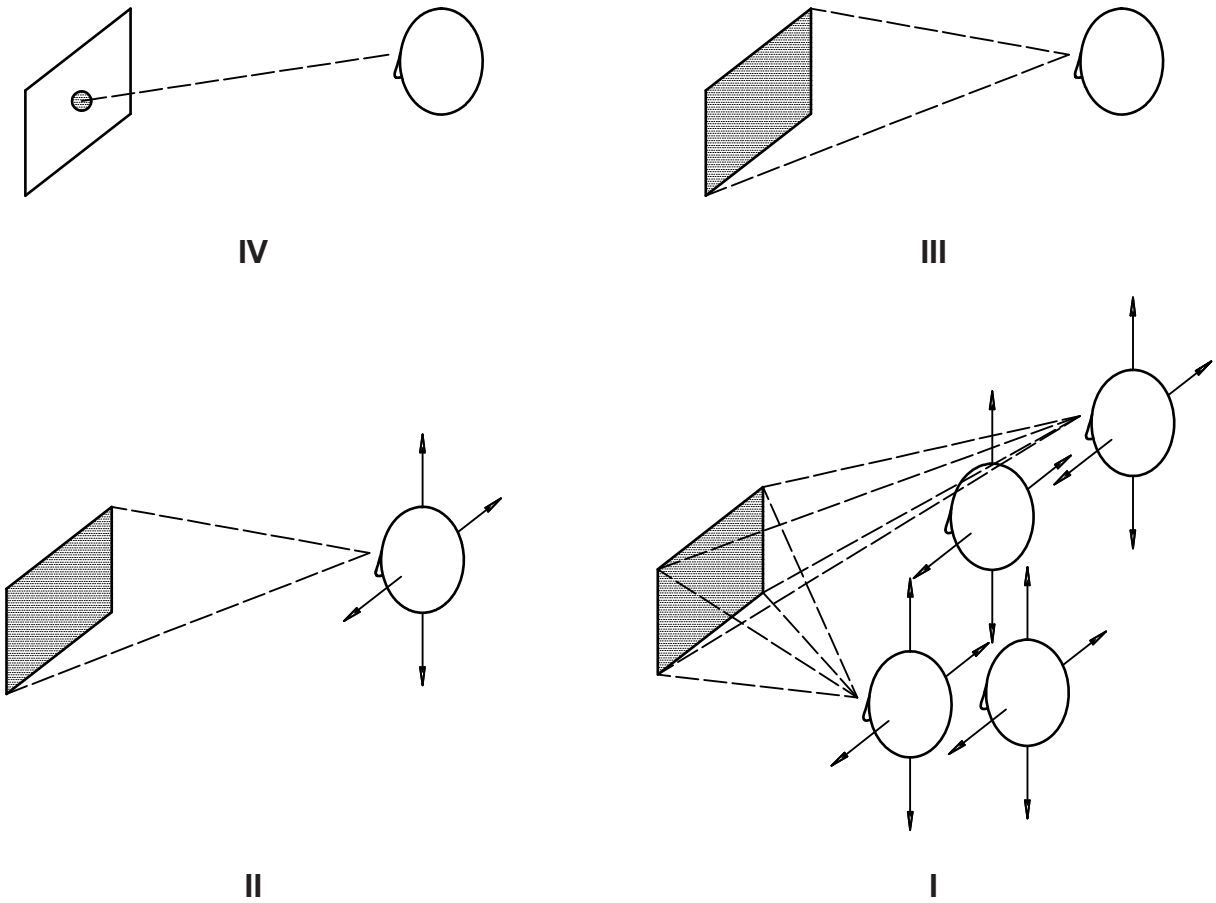


The arrows in the picture indicate the possibility of moving the head.

Four classes, $Class_{Viewing}$, are defined, I-IV. The relevant range of viewing directions depends on the task design, i.e. the size of the viewing area, the viewing distance and how much the user needs to move his head and still maintain acceptable legibility and viewing performance. This part of ISO 13406 defines different viewing-direction criteria for different parameters, such as contrast and chromaticity uniformity difference.

To enable ergonomic task design, the manufacturer shall report $Class_{Viewing}$ of the display in the user's manual or in an equivalent way.

**Figure 12 — Viewing direction range**



Documents
Document Sharing Hub
Full document details: BS EN ISO 13406-2:2002

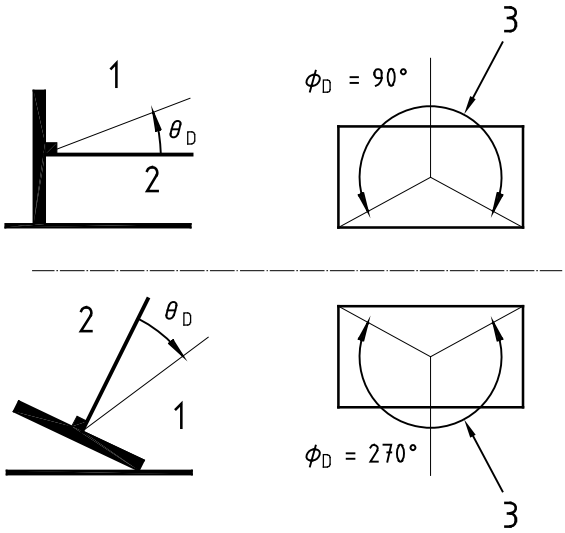


**Key**

1 Line of sight

2 Normal

3 Relevant azimuth range

**Figure 13 — Relevant azimuth range**

Figure 14 is an illustration of test directions. The data used for the examples in Figure 14, Figure 30 and Tables 33 to 35 are identical.

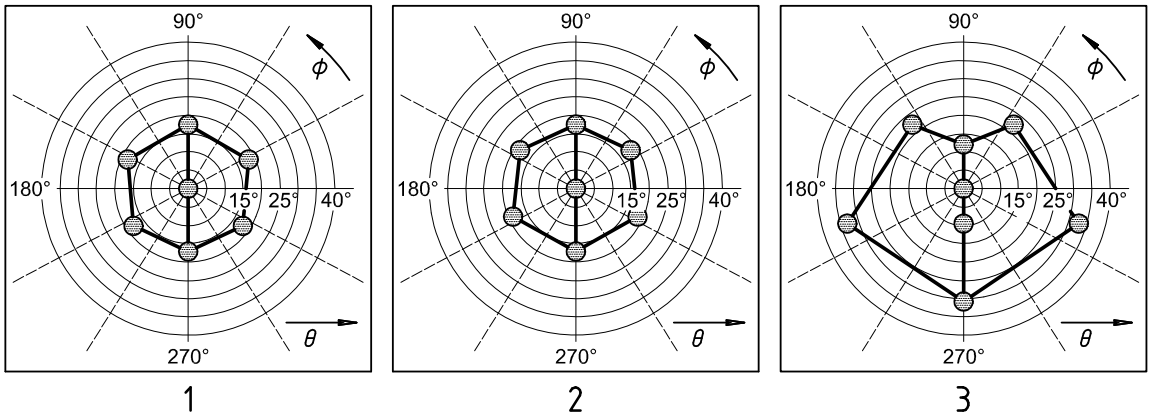


**Key**

1 Landscape oriented, $\phi_D$ = 90°, $\theta_D$ = 0° and $\phi_C$ = 63,4° (Table 33)

2 Landscape oriented, $\phi_D$ = 270°, $\theta_D$ = 0° and $\phi_C$ = 63,4° (Table 34)

3 Portrait oriented, $\phi_D$ = 270°, $\theta_D$ = 10° and $\phi_C$ = 71,6° (Table 35)

**Figure 14 — Examples of test directions**

NOTE 2 The key factors affecting the user preference for design azimuth, $\phi_D$, are glare, brightness and contrast. For isotropic emissive displays $\phi_D$ is usually 270° (because users try to avoid reflected glare caused by luminaires. For isotropic reflective displays $\phi_D$ is usually 90° (because users try to maximize the brightness). For anisotropic displays $\phi_D$ is an angle where contrast and brightness are sufficiently high but reflective glare is sufficiently low (thus $\phi_D$ depends highly on the display technology and the luminous environment).

NOTE 3 For single-viewer legibility, a value of $\theta_{range}$ greater than 80° will not add value. For all displays and printed material, as the inclination angle increases, the characters appear geometrically shorter. At 40°, a character appears about 25 % shorter.

Documents
Document Sharing Hub



Full document details: BS EN ISO 13406-2:2002

For example, a 16' character, viewed at an inclination angle of 40°, is shortened to only 12'. It is unnecessary to require isotropy for larger inclination angles since even printed matter suffers from more severe off-angle viewing. Independence of parameters with viewing direction outside this 80° viewing cone may be useful when multiple viewers use a single display and character distortion is not a problem, but this situation is not addressed in this part of ISO 13406.

NOTE 4 The inclination angle range, $\theta_{range}$ was selected to allow acceptable display use without requiring head movement due to anisotropy. The minimum inclination angle range is based on reading comfort and depends on the size of the panel and the viewing distance. The maximum inclination angle range depends on legibility for a single viewer.

## 7.3 Design screen illuminance

The supplier shall specify the design screen illuminance, $E_S$. For emissive displays, $E_S$ shall be from 250 lx to 750 lx. For transflective and reflective displays, the supplier shall indicate the minimum illuminance under which the display will meet the luminance requirements in *7.14 Display luminance.*

If a flat panel VDU is designed for use in an erect posture by a sitting user, the default screen illuminance, from ISO 9241-3, $E$ = [250 + (250 cos $\alpha$ )] lx, may be used where $\alpha$ is the screen tilt angle. (See 3.4.10 for the definition of screen tilt angle.)

If the application is using, or if the flat panel is designed to be used with, a default colour set, then the chromaticity coordinates $u'_S$, $v'_S$ of the design screen illumination need to be defined in order to perform colour difference calculations.

NOTE 1 See *8.3.3.4 Luminance sources* for the spectro-radiometric distribution requirements needed for repeatable measurements.

NOTE 2 Transflective or reflective displays with a minimum illuminance that exceeds 750 lx sometimes require a task light for office operation.

## 7.4 Gaze and head-tilt angles

The work place and flat panel VDU design should permit the user to view the screen in the design viewing direction ($\theta_D$, $\phi_D$) with a gaze angle from 0° to 45° and a head tilt angle from 0° to 20°.

## 7.5 Chromaticity uniformity difference (See Figure 15)

This requirement does not apply to monochrome displays.

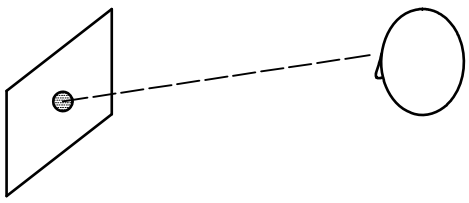

**IV**

Any non-uniformity of the colour shall not create competing information content when evaluated at three locations on the screen for viewing direction range class, $Class_{Viewing}$ IV according to *7.2 Design viewing direction*. Depending on the task, $Class_{Viewing}$ I, II or III should be required.

**Figure 15 — Chromaticity uniformity difference**



Documents
Document Sharing Hub
Full document details: BS EN ISO 13406-2:2002

The maximum chromaticity difference shall conform to the values in Table 8. The values required for the default colour set case in 7.25 are recommended for appearance in all applications.

**Table 8 — Maximum chromaticity difference**

| $\frac{D_{\text{active}}}{D_{\text{design view}}}$ [a] | $\Delta u'v'$ | |
|---|---|---|
| | Applications using colour per *7.25 Default colour set* | Any primary colour[b] |
| < 0,75 | 0,02 | 0,02 |
| ⩾ 0,75 | 0,03 | 0,03 |

a $D_{\text{active}}$ is the diagonal of the active area of the screen, $D_{\text{design view}}$ is the design viewing distance.

b The primary colours are the unmixed colours from the flat panel, usually red, green and blue.

## 7.6 Character height

Flat panel displays shall be capable of presenting characters with a character height, $\Psi$ according to Table 9. Character height is the number of pixels in an unaccented upper-case H, $N_{\text{H,Height}}$ times the vertical pitch, $V_{\text{pitch}}$. See Figure 16 for an example.

**Table 9 — Character heights, $\Psi$**

| | Minimum for legibility | Preferred range for legibility |
|---|---|---|
| Latin origin | 16′ | 20′ to 22′ |
| Asian | 25′ | 30′ to 35′ |

For applications where legibility is incidental to the task, smaller characters may be used (e.g., for footnotes, superscripts, subscripts). The character height should exceed 10′ unless loss of legibility is acceptable (e.g., page layout appearance).



Documents
Document Sharing Hub
Full document details: BS EN ISO 13406-2:2002

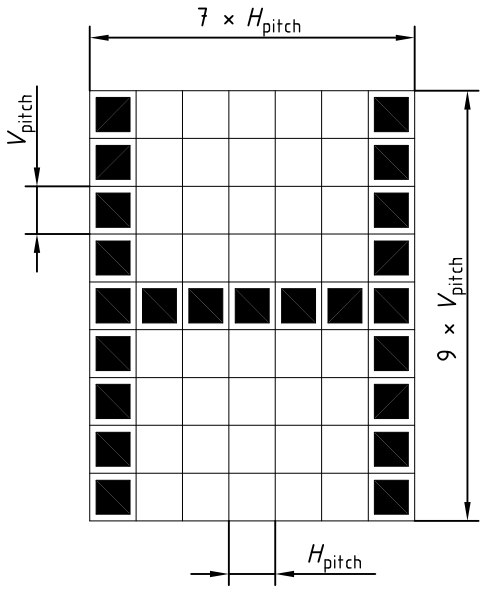


Character width = 7 × $H_{pitch}$, character height $\Psi = N_{H,Height} \times V_{pitch}$ and $N_{H,Height}$ = 9.

**Figure 16 — Example of character height**

## 7.7 Stroke width

For a Latin-origin character, the number of pixels in a stroke shall be from 8 % to 20 % of $N_{H,Height}$.

NOTE Figure 16 illustrates a case of 9 pixels in an H, and a correct design of the stroke width. (1 pixel equals 11 %.)

## 7.8 Character width-to-height ratio

**Table 10 — Character width-to-height ratio**

| | Required range | Preferred range for optimum legibility |
|---|---|---|
| Latin origin | 0,5:1 to 1:1 | 0,6:1 to 0,9:1 |
| Asian | 0,8:1 to 1,2:1 | |
| For Latin-origin characters, the ratio shall be judged on an unaccented upper-case character, H. See Figure 16. | | |

## 7.9 Fill factor

For flat panel displays having a pixel density of less than 30 pixels per degree at the design viewing distance, the fill factor shall exceed 0,3.

NOTE When displays are used in marginal illumination environments (uncontrollable glare or loss of contrast), user performance continues to improve for fill factors of up to 0,5.



Documents
Document Sharing Hub
Full document details: BS EN ISO 13406-2:2002

## 7.10 Character format

**Table 11 — Character format requirement for Latin, Cyrillic and Greek origin alphabetic characters and Arabic numerals.**

| Character matrix (width to height) | | Remark |
|---|---|---|
| Minimum used for numeric and upper-case-only presentations | Minimum for reading for context or if legibility is important | |
| 5 × 7 | 7 × 9 | See below for restrictions and exceptions |

The character matrix shall be increased upward by at least two pixels if diacritics are used. If lower case is used, the character matrix shall be increased downward by at least two pixels, to accommodate the descenders of the lower-case letters. Mixed-case alphabetics are more legible than upper-case-only alphabetics.

For higher density character matrices, the number of pixels used for diacritics should follow conventional designs for printed text. A 4 × 5 (width to height) character matrix shall be the minimum used for subscripts and superscripts, and for numerators and denominators of fractions displayed in a single character position. The 4 × 5 matrix may also be used for alphanumeric information not related to the operator's task, such as copyright information. (See ISO 9241-3:1992, 5.8)

Characters such as W can be wider than H. Characters such as I, j, l are narrower.

The matrix judgement is made on an unaccented upper-case H.

**Table 12 — Character format requirement for Asian characters.**

| Character matrix (width to height) | | Remark |
|---|---|---|
| Minimum used font size | Preferred font size | |
| 15 × 16 | 24 × 24 | Fixed sized font |

## 7.11 Between-character spacing

For character fonts without serifs, the number of between-character pixels shall be a minimum of the stroke width count or one pixel. If characters have serifs, the between-character spacing shall be a minimum of one pixel between the serifs of adjacent characters. (ISO 9241-3:1992, 5.10)

## 7.12 Between-word spacing

The minimum number of pixels between words shall be the number of pixels in the width of an unaccented upper-case H unless the character font is designed as a representation of designed print fonts or proportional spacing is used. When simulating a print font, the spacing used in the font design may be used. The number of pixels in the width of the character N is recommended as between-word spacing for proportionally spaced fonts.

## 7.13 Between-line spacing

A minimum of one pixel shall be used for spacing between lines of text. This area may not contain parts of characters or diacritics, but may contain underscores. (ISO 9241-3:1992, 5.12)

AVA Documents
Document Sharing Hub



Full document details: BS EN ISO 13406-2:2002

## 7.14 Display luminance

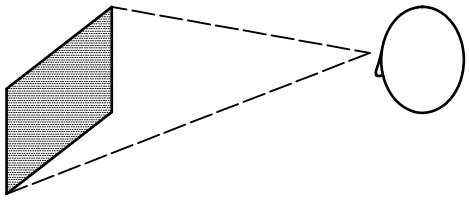

**III**

In ambient illumination, the luminance shall exceed the minimum value required for visual acuity when evaluated at three locations on the screen for viewing direction range class, $\text{Class}_{\text{Viewing}}$ III according to *7.2 Design viewing direction*. Depending on the task, $\text{Class}_{\text{Viewing}}$ II or I should be required.

**Figure 17 — Display luminance**

The luminance of information (either foreground or background) shall satisfy the following inequality, over all viewing directions according to *7.2 Design viewing direction*.

$$L_{\text{HS}} + L_{\text{D}} \geqslant 20 \text{ cd/m}^2 \tag{18}$$

where

$L_{\text{HS}}$ is the emitted luminance component in the high state;

$L_{\text{D}}$ is the luminance component reflected from diffuse illumination.

Expanded

$$L_{E\text{s,HS}(n)} \geqslant 20 \text{ cd/m}^2,\ n = \text{CL} - 1..\text{CL} - 7, \text{HL} - 1..\text{HL} - 7, \text{LL} - 1..\text{LL} - 7 \tag{19}$$

The luminance requirement is related to contrast [see *7.15 Contrast*, equation (22)]. In most cases the contrast requirement will mean that a higher luminance, e.g., 35 cd/m$^2$ is required. When the luminance is lower than 35 cd/m$^2$, contrast modulation will need to be higher than 0,5. Figure 18 is a graphical representation of equation (22).

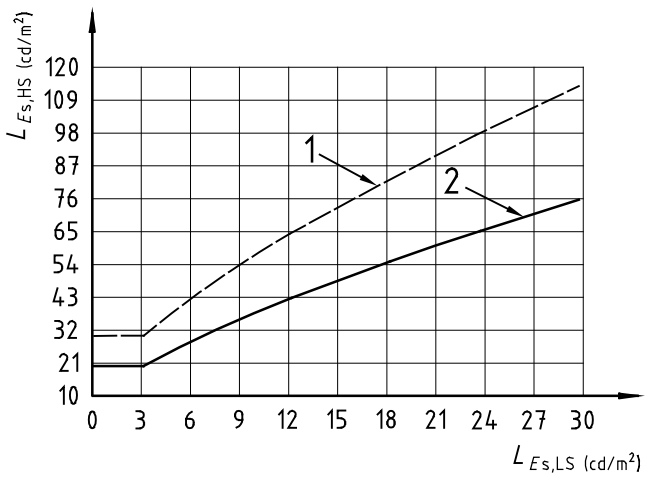


**Key**

1 Flat panels with absolute luminance coding, the higher luminance level.

2 All flat panels. This includes panels with no absolute luminance coding.

**Figure 18 — Graphical presentation of equation (22)**



Documents
Document Sharing Hub
Full document details: BS EN ISO 13406-2:2002

NOTE Users often prefer higher display luminance levels (e.g. 100 cd/m$^2$), particularly in conditions of high ambient illuminance.

## 7.15 Contrast (See Figure 19)

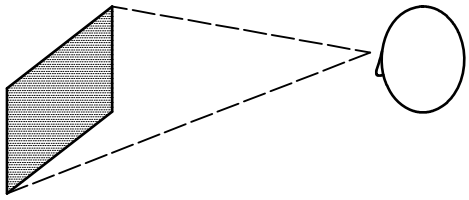

**III**

In ambient illumination, the contrast shall exceed the minimum value required for good visual performance when evaluated at three locations on the screen for viewing direction range class, $\text{Class}_{\text{Viewing}}$ III according to *7.2 Design viewing direction*. Depending on the task, $\text{Class}_{\text{Viewing}}$ II or I should be required.

**Figure 19 — Contrast**

The contrast of information shall satisfy the following inequality, over all viewing directions according to *7.2 Design viewing direction*.

$$\frac{L_{\text{HS}} + L_{\text{D}}}{L_{\text{LS}} + L_{\text{D}}} \geqslant 1 + 10 \times (L_{\text{LS}} + L_{\text{D}})^{-0,55} \tag{20}$$

where

$L_{\text{HS}}$ is the emitted luminance component in the high state;

$L_{\text{LS}}$ is the emitted luminance component in the low state;

$L_{\text{D}}$ is the luminance component reflected from diffuse illumination.

Expanded

$$C_{\text{m}} = \frac{L_{E\text{s,HS}(n)} - L_{E\text{s,LS}(n)}}{L_{E\text{s,HS}(n)} + L_{E\text{s,LS}(n)}} \geqslant \frac{5 \times L_{E\text{s,LS}(n)}^{-0,55}}{1 + 5 \times L_{E\text{s,LS}(n)}^{-0,55}}, \; n = \text{CL-1..CL-7, HL-1..HL-7, LL-1..LL-7} \tag{21}$$

Or the equivalent contrast ratio inequality:

$$CR = \frac{L_{E\text{s,HS}(n)}}{L_{E\text{s,LS}(n)}} \geqslant 1 + 10\, L_{E\text{s,LS}(n)}^{-0,55}, \; n = \text{CL-1..CL-7, HL-1..HL-7, LL-1..LL-7} \tag{22}$$

Figure 20 is a graphical representation of equation (21).



Documents
Document Sharing Hub
Full document details: BS EN ISO 13406-2:2002

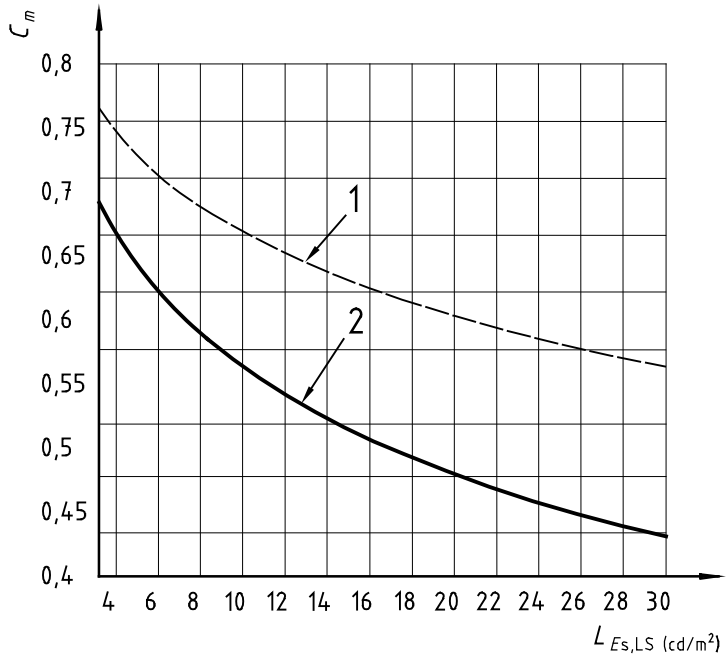


**Key**

1 Flat panels with absolute luminance coding, the higher luminance level.

2 All flat panels. This includes panels with no absolute luminance coding.

**Figure 20 — Graphical presentation of equation (21)**

## 7.16 Luminance balance

The area-luminance of task areas that are frequently viewed in sequence while using the display (document, covers, etc.) should be between 0,1 $L_{Ea,HS(HL-7)}$ and 10 $L_{Ea,HS(HL-7)}$, where $L_{Ea,HS(HL-7)}$ is the area-luminance of the highest luminance state used on the display in the application in the design viewing direction.

## 7.17 Reflections (See Figure 21)

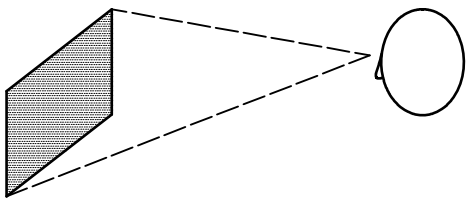

**III**

In ambient illumination, the contrast of text shall, in the presence of reflections, exceed the minimum value required for good visual performance and the contrast of unwanted reflections shall not exceed the threshold for comfort; when evaluated at three locations on the screen for viewing-direction range class, $\text{Class}_{\text{Viewing}}$ III according to *7.2 Design viewing direction*. Depending on the task, viewing-direction range $\text{Class}_{\text{Viewing}}$ II or I should be required.

**Figure 21 — Reflections**

The supplier shall specify $\text{Class}_{\text{Reflection}}$ from Table 13 under which the flat panel display *meets 7.17.1 Contrast in the presence of reflections* and *7.17.2 Contrast of unwanted reflections*.

The requirements in this subclause are based on the research done during the development of ISO 9241-7.



Documents
Document Sharing Hub
Full document details: BS EN ISO 13406-2:2002

**Table 13 — Reference luminances for reflection classes,** $\text{Class}_{\text{Reflection}}$

| $\text{Class}_{\text{Reflection}}$ | Luminance of the sources of specular reflection, cd/m$^2$ | Environment[a] |
|---|---|---|
| I | Both $L_{\text{REFEXT-I}}$ = 200 and $L_{\text{REFSML-I}}$ = 2 000 | Suitable for general office use |
| II | Either $L_{\text{REFEXT-II}}$ = 200 or $L_{\text{REFSML-II}}$ = 2 000 | Suitable for most, but not all, office environments |
| III | Either $L_{\text{REFEXT-III}}$ = 125 or $L_{\text{REFSML-III}}$ = 200 | Requiring a specially controlled luminous environment |

NOTE 1 In $\text{Class}_{\text{Reflection}}$ II or III, either the 15° aperture or the 1° aperture source is evaluated, but not both. In $\text{Class}_{\text{Reflection}}$ I, both sources are evaluated.

NOTE 2 The reflection requirements and test methods are the same as in ISO 9241-7 except for the consideration of azimuth angles and display state. ISO 9241-7 tests at only one azimuth angle and one state, which is enough for proper characterization of CRT display performance. This part of ISO 13406 tests at six azimuth angles and two display states in order to give a proper characterization of the flat panel performance.

[a] For more information on environmental classification, see ISO 9241-7.

### 7.17.1 Contrast in the presence of reflections (See Figure 22)

To achieve good enough contrast, the following inequality shall be satisfied over all azimuth angles according to *7.2 Design viewing direction*:

$$\frac{(L_{\text{HS}} + L_{\text{D}} + L_{\text{S}})}{(L_{\text{LS}} + L_{\text{D}} + L_{\text{S}})} \geqslant 1 + 10 \times (L_{\text{LS}} + L_{\text{D}} + L_{\text{S}})^{-0,55} \qquad (23)$$

where

$L_{\text{HS}}$ is the emitted luminance component in the high state;

$L_{\text{LS}}$ is the emitted luminance component in the low state;

$L_{\text{D}}$ is the luminance component reflected from diffuse illumination;

$L_{\text{S}}$ is the luminance component reflected from specular illumination.

The objective is to maintain legibility in the presence of reflections. Contrast is used as a metric of legibility. The reflection class creates a relation between flat panel performance requirements and the lighting requirements of the work environment, defined in ISO 9241-6.

**Figure 22 — Contrast in the presence of reflections**



Documents
Document Sharing Hub
Full document details: BS EN ISO 13406-2:2002

NOTE The contrast in this subclause is not precisely the same as the contrast in *7.15 Contrast* because measurement details differ (the reflectance component $L_s$ and the measurement geometry).

### 7.17.2 Contrast of unwanted reflections

The contrast of unwanted reflected images shall satisfy one or both of the following inequalities, as defined by the flat panel manufacturer (see *7.18 Image polarity*), over all azimuth angles according to *7.2 Design viewing direction*.

For positive polarity screens or applications

$$\frac{L_{HS} + L_D + L_S}{L_{HS} + L_D} \leqslant 1{,}25 \tag{24}$$

For negative polarity screens or applications

$$\frac{L_{LS} + L_D + L_S}{L_{LS} + L_D} \leqslant 1{,}2 + \frac{1}{15} \times \frac{L_{HS} + L_D}{L_{LS} + L_D} \tag{25}$$

where

$L_{HS}$ is the emitted luminance component in the high state;

$L_{LS}$ is the emitted luminance component in the low state;

$L_D$ is the luminance component reflected from diffuse illumination;

$L_S$ is the luminance component reflected from specular illumination.

NOTE The concept is not complex. The left-hand side of each inequality is the contrast ratio of the specular image (for example, the face in Figure 23) against the background. For positive polarity, the acceptability of an unwanted reflected image is independent of the contrast of the wanted information (hence the right-hand side is simply a number). In the case of a negative polarity screen, the contrast of the wanted negative image competes with the unwanted image (hence the luminance ratio on the right-hand side).



Documents
Document Sharing Hub
Full document details: BS EN ISO 13406-2:2002

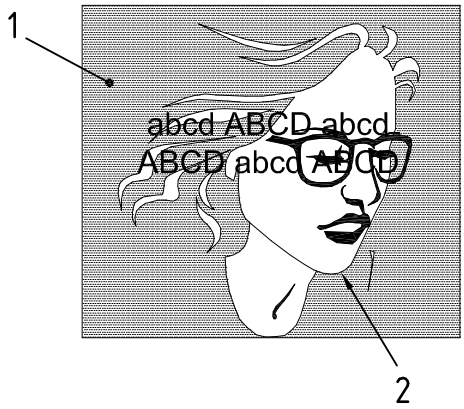


**Key**

1 Background
2 Unwanted image (Specular reflection)

The display shows a text with two lines. The face of the user is unintentionally reflected in the display, creating an image that competes with the text. The objective is to keep the contrast of the reflected image low enough not to compete with the information on the display.

NOTE There are concerns for both large luminance sources, like the cheek, and small ones, like reflected edges, such as from the eyeglasses.

**Figure 23 — Example of unwanted image from specular reflection**

## 7.18 Image polarity

Either image polarity, dark characters on a brighter background (positive image polarity), or bright characters on a darker background (negative image polarity) is acceptable, *per se*, provided the flat panel VDU meets the requirements of this part of ISO 13406. Users vary in their preferences for image polarity. If a display provides both image polarities, it shall meet the requirements of this part of ISO 13406 in each image polarity.

NOTE There are advantages for each image polarity. For example,

— with positive polarity, specular reflections are less perceptible, edges appear sharper, and luminance balance is easier to obtain. Positive polarity is preferred for ordinary office tasks;

— with negative polarity, flicker is less perceptible, legibility is superior for individuals with anomalously low visual acuity, and characters can sometimes be perceived as larger than they are.

## 7.19 Luminance uniformity (See Figure 24 and Table 14)

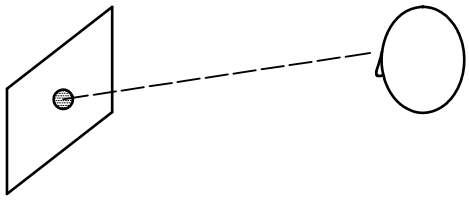

**IV**

For an intended uniform luminance, the luminance non-uniformity shall in ambient illumination, not exceed the threshold for reduced visual performance when evaluated at three locations on the screen for viewing-direction range class, $\text{Class}_{\text{Viewing}}$ IV according to *7.2 Design viewing direction*. Depending on the task, $\text{Class}_{\text{Viewing}}$ III, II or I should be required.

**Figure 24 — Luminance uniformity**

Documents
Document Sharing Hub



Full document details: BS EN ISO 13406-2:2002