BRITISH STANDARD

BS EN ISO 13790:2008

Energy performance of buildings — Calculation of energy use for space heating and cooling (ISO 13790:2008)

ICS 91.120.10; 91.140.10

NO COPYING WITHOUT BSI PERMISSION EXCEPT AS PERMITTED BY COPYRIGHT LAW

Document Sharing Hub
British Standards

Full document details: BS EN ISO 13790:2008

National foreword

This British Standard is the UK implementation of EN ISO 13790:2008. It supersedes BS EN 832:2000 and BS EN ISO 13790:2004 which is withdrawn.

The UK participation in its preparation was entrusted to Technical Committee B/540, Energy performance of materials components and buildings.

A list of organizations represented on this committee can be obtained on request to its secretary.

This publication does not purport to include all the necessary provisions of a contract. Users are responsible for its correct application.

Compliance with a British Standard cannot confer immunity from legal obligations.

This British Standard was published under the authority of the Standards Policy and Strategy Committee on 31 December 2008

© BSI 2008

ISBN 978 0 580 55359 2

Amendments/corrigenda issued since publication

Date	Comments

Documents
Document Sharing Hub

Full document details: BS EN ISO 13790:2008

EUROPEAN STANDARD

NORME EUROPÉENNE

EUROPÄISCHE NORM

EN ISO 13790

March 2008

ICS 91.120.10

Supersedes EN 832:1998, EN ISO 13790:2004

English Version

Energy performance of buildings - Calculation of energy use for space heating and cooling (ISO 13790:2008)

Performance énergétique des bâtiments - Calcul des besoins d'énergie pour le chauffage et le refroidissement des locaux (ISO 13790:2008)

Energieeffizienz von Gebäuden - Berechnung des Energiebedarfs für Heizung und Kühlung (ISO 13790:2008)

This European Standard was approved by CEN on 23 February 2008.

CEN members are bound to comply with the CEN/CENELEC Internal Regulations which stipulate the conditions for giving this European Standard the status of a national standard without any alteration. Up-to-date lists and bibliographical references concerning such national standards may be obtained on application to the CEN Management Centre or to any CEN member.

This European Standard exists in three official versions (English, French, German). A version in any other language made by translation under the responsibility of a CEN member into its own language and notified to the CEN Management Centre has the same status as the official versions.

CEN members are the national standards bodies of Austria, Belgium, Bulgaria, Cyprus, Czech Republic, Denmark, Estonia, Finland, France, Germany, Greece, Hungary, Iceland, Ireland, Italy, Latvia, Lithuania, Luxembourg, Malta, Netherlands, Norway, Poland, Portugal, Romania, Slovakia, Slovenia, Spain, Sweden, Switzerland and United Kingdom.

EUROPEAN COMMITTEE FOR STANDARDIZATION
COMITÉ EUROPÉEN DE NORMALISATION
EUROPÄISCHES KOMITEE FÜR NORMUNG

Management Centre: rue de Stassart, 36 B-1050 Brussels

© 2008 CEN All rights of exploitation in any form and by any means reserved worldwide for CEN national Members.

Ref. No. EN ISO 13790:2008: E

Documents
Document Sharing Hub

Full document details: BS EN ISO 13790:2008

Foreword

This document (EN ISO 13790:2008) has been prepared by Technical Committee ISO/TC 163 "Thermal performance and energy use in the built environment" in collaboration with Technical Committee CEN/TC 89 “Thermal performance of buildings and building components” the secretariat of which is held by SIS.

This European Standard shall be given the status of a national standard, either by publication of an identical text or by endorsement, at the latest by September 2008, and conflicting national standards shall be withdrawn at the latest by September 2008.

Attention is drawn to the possibility that some of the elements of this document may be the subject of patent rights. CEN [and/or CENELEC] shall not be held responsible for identifying any or all such patent rights.

This document supersedes EN ISO 13790:2004, EN 832:1998.

This document has been prepared under a mandate given to CEN by the European Commission and the European Free Trade Association (Mandate M/343), and supports essential requirements of EU Directive 2002/91/EC on the energy performance of buildings (EPBD). It forms part of a series of standards aimed at European harmonisation of the methodology for the calculation of the energy performance of buildings. An overview of the whole set of standards is given in CEN/TR 15615.

Attention is drawn to the need for observance of EU Directives transposed into national legal requirements. Existing national regulations (with or without reference to national standards) may restrict for the time being the implementation of this European Standard.

According to the CEN/CENELEC Internal Regulations, the national standards organizations of the following countries are bound to implement this European Standard: Austria, Belgium, Bulgaria, Cyprus, Czech Republic, Denmark, Estonia, Finland, France, Germany, Greece, Hungary, Iceland, Ireland, Italy, Latvia, Lithuania, Luxembourg, Malta, Netherlands, Norway, Poland, Portugal, Romania, Slovakia, Slovenia, Spain, Sweden, Switzerland and the United Kingdom.

Endorsement notice

The text of ISO 13790:2008 has been approved by CEN as a EN ISO 13790:2008 without any modification.

Documents
Document Sharing Hub

Full document details: BS EN ISO 13790:2008

Foreword

ISO (the International Organization for Standardization) is a worldwide federation of national standards bodies (ISO member bodies). The work of preparing International Standards is normally carried out through ISO technical committees. Each member body interested in a subject for which a technical committee has been established has the right to be represented on that committee. International organizations, governmental and non-governmental, in liaison with ISO, also take part in the work. ISO collaborates closely with the International Electrotechnical Commission (IEC) on all matters of electrotechnical standardization.

International Standards are drafted in accordance with the rules given in the ISO/IEC Directives, Part 2.

The main task of technical committees is to prepare International Standards. Draft International Standards adopted by the technical committees are circulated to the member bodies for voting. Publication as an International Standard requires approval by at least 75 % of the member bodies casting a vote.

Attention is drawn to the possibility that some of the elements of this document may be the subject of patent rights. ISO shall not be held responsible for identifying any or all such patent rights.

ISO 13790 was prepared by Technical Committee ISO/TC 163, *Thermal performance and energy use in the built environment*, Subcommittee SC 2, *Calculation methods*, in cooperation with CEN/TC 89, *Thermal performance of buildings and building components*.

This second edition cancels and replaces the first edition (ISO 13790:2004), which has been technically revised. A summary of the principal changes is given below.

— Throughout, statements and equations that were true only for the heating mode have been amplified to accommodate both heating and cooling modes.

— Throughout, all texts that applied only for monthly or seasonal calculations have been amplified to accommodate hourly as well as monthly and seasonal calculations.

— The structure has been adapted to maximize the common use of procedures, conditions and input data, irrespective of the calculation method.

— A monthly (and seasonal) method for cooling, similar to the method in the first edition for heating, has been added.

— A simple hourly method for heating and cooling, to facilitate direct introduction of hourly, daily or weekly patterns (e.g. controls, user behaviour), has been added.

— For dynamic simulation methods, procedures that are consistent with the boundary conditions and input data for the seasonal, monthly and simple hourly methods have been added for the boundary conditions and input data.

— The whole document has been scrutinized to check its applicability within the context of building regulations, which require a minimum of ambiguities and subjective choices; where needed, possibilities are offered for national choices as given in national annexes, national building codes or national standards referring to this document, depending on the purpose/application of the calculations as detailed in this list and on the type or complexity of the building.

Documents
Document Sharing Hub

© ISO 2008 – All rights reserved

Full document details: BS EN ISO 13790:2008

Introduction

This standard provides the means (in part) to assess the contribution that building products and services make to energy conservation and to the overall energy performance of buildings.

This International Standard has been prepared under a mandate given to CEN by the European Commission and the European Free Trade Association (Mandate M/343), and supports essential requirements of EU Directive 2002/91/EC on the energy performance of buildings (EPBD[26]). It forms part of a series of standards aimed at European harmonization of the methodology for the calculation of the energy performance of buildings. An overview of the whole set of standards to support the EPBD is given in CEN/TR 15615 [28]. See also Annex A.

This International Standard is one of a series of calculation methods for the design and evaluation of thermal and energy performance of buildings. It presents a coherent set of calculation methods at different levels of detail, for the energy use for the space heating and cooling of a building, and the influence of the recoverable thermal losses of technical buildings systems such as the heating and cooling system.

In combination with other energy performance-related standards (see Figure 1, which gives an outline of the calculation procedure and its links with other energy performance-related standards), this International Standard can be used for the following applications:

a) judging compliance with regulations expressed in terms of energy targets (via the design rating; see Annex A);

b) comparing the energy performance of various design alternatives for a planned building;

c) displaying a standardized level of energy performance of existing buildings (the standard calculated rating; see Annex A);

d) assessing the effect of possible energy conservation measures on an existing building, by calculation of the energy use with and without the energy conservation measure; see Annex A;

e) predicting future energy resource needs on a regional, national or international scale, by calculating the energy use of typical buildings representative of the building stock.

References are made to other International Standards or to national documents for input data and detailed calculation procedures not provided by this International Standard.

© ISO 2008 – All rights reserved
Documents
Document Sharing Hub
Full document details: BS EN ISO 13790:2008

The main inputs needed for this International Standard are the following:

— transmission and ventilation properties;

— heat gains from internal heat sources, solar properties;

— climate data;

— description of building and building components, systems and use;

— comfort requirements (set-point temperatures and ventilation rates);

— data related to the heating, cooling, hot water, ventilation and lighting systems:

  — partition of building into different zones for the calculation (different systems may require different zones);

  — energy losses dissipated and recoverable or recovered in the building (internal heat gains, recovery of ventilation heat loss);

  — airflow rate and temperature of ventilation supply air (if centrally pre-heated or pre-cooled) and associated energy use for air circulation and pre-heating or pre-cooling;

  — controls.

The main outputs of this International Standard are the following:

— annual energy needs for space heating and cooling;

— annual energy use for space heating and cooling;

— length of heating and cooling season (for system running hours) affecting the energy use and auxiliary energy of season-length-dependent technical building systems for heating, cooling and ventilation.

Additional outputs are the following:

— monthly values of energy needs and energy use (informative);

— monthly values of main elements in the energy balance, e.g. transmission, ventilation, internal heat gains, solar heat;

— contribution of passive solar gains;

— system losses (from heating, cooling, hot water, ventilation and lighting systems), recovered in the building.

© ISO 2008 – All rights reserved

Documents
Document Sharing Hub
Full document details: BS EN ISO 13790:2008

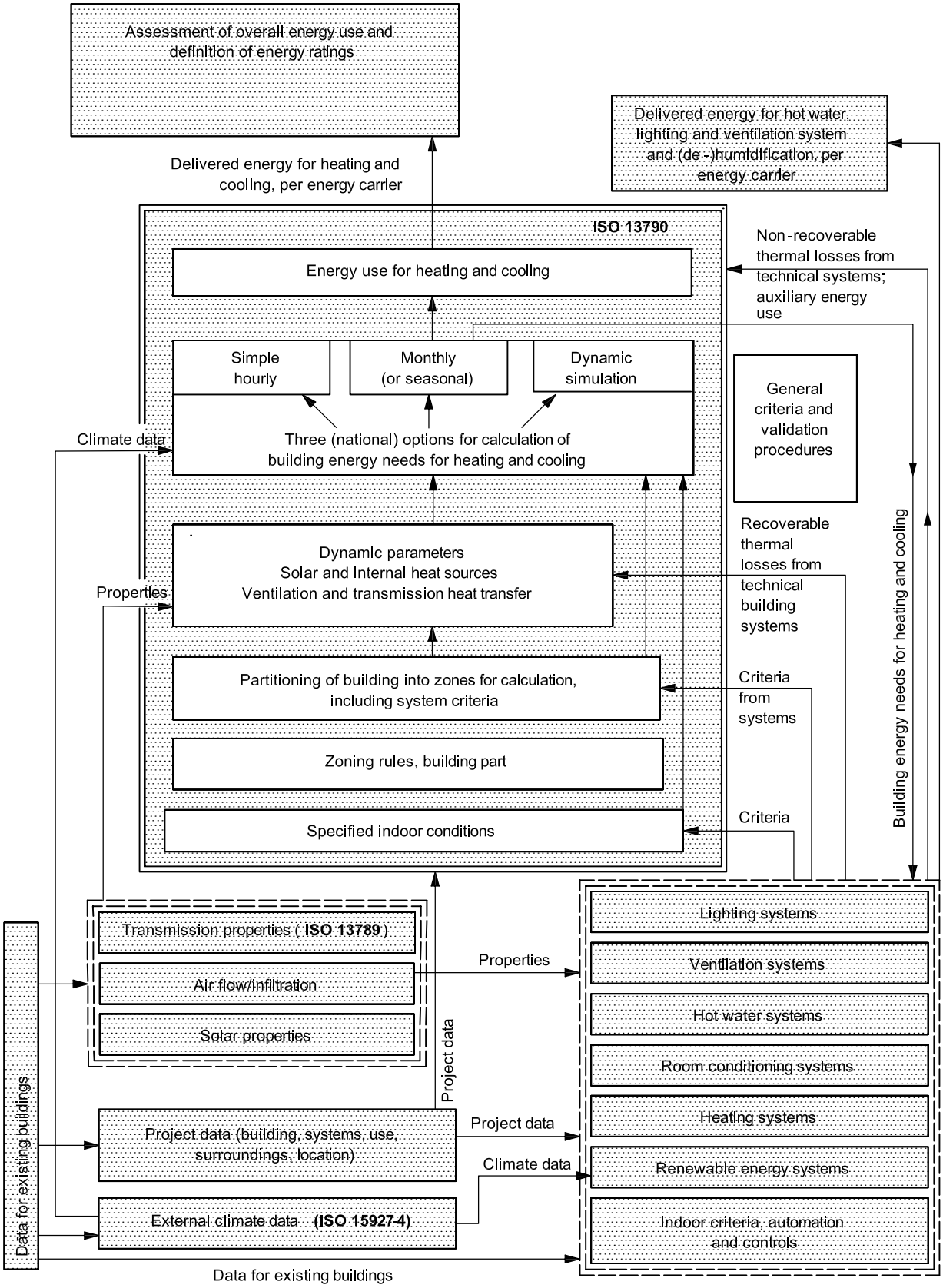

Figure 1 — Flow chart of calculation procedure and links with other standards

© ISO 2008 – All rights reserved
Documents
Document Sharing Hub
Full document details: BS EN ISO 13790:2008

Energy performance of buildings — Calculation of energy use for space heating and cooling

1 Scope

This International Standard gives calculation methods for assessment of the annual energy use for space heating and cooling of a residential or a non-residential building, or a part of it, referred to as “the building”.

This method includes the calculation of:

a) the heat transfer by transmission and ventilation of the building zone when heated or cooled to constant internal temperature;

b) the contribution of internal and solar heat gains to the building heat balance;

c) the annual energy needs for heating and cooling, to maintain the specified set-point temperatures in the building – latent heat not included;

d) the annual energy use for heating and cooling of the building, using input from the relevant system standards referred to in this International Standard and specified in Annex A.

The building can have several zones with different set-point temperatures, and can have intermittent heating and cooling.

The calculation interval is either one month or one hour. For residential buildings, the calculation can also be performed on the basis of the heating and/or cooling season.

This International Standard also gives an alternative simple hourly method, using hourly user schedules (such as temperature set-points, ventilation modes or operation schedules of movable solar shading).

Procedures are given for the use of more detailed simulation methods to ensure compatibility and consistency between the application and results of the different types of method. This International Standard provides, for instance, common rules for the boundary conditions and physical input data, irrespective of the calculation approach chosen.

Special attention has been given to the suitability of this International Standard for use within the context of national or regional building regulations. This includes the calculation of an energy performance rating of a building, on the basis of standardized conditions, for an energy performance certificate. The result can have legal implications, in particular when it is used to judge compliance with minimum energy performance levels, which can, for instance, be required to obtain a building permit. For such applications, it is important that the calculation procedures be unambiguous, repeatable and verifiable. A special situation is the calculation of the energy performance in the case of old existing buildings, if gathering the full required input would be too labour-intensive for the purpose, relative to the cost-effectiveness of gathering the input. In this case, it is important that the calculation procedures provide the right balance between accuracy and data collection costs. To accommodate the application for these and other situations, this International Standard offers different choices. It is up to national bodies whether or not to choose a specific option for mandatory use, e.g. depending on the region in the country, the type of building and its use, and on the purpose of the assessment.

Annex H provides some information on the accuracy of the method.

© ISO 2008 – All rights reserved

Documents
Document Sharing Hub

Full document details: BS EN ISO 13790:2008

This International Standard has been developed for buildings that are, or are assumed to be, heated and/or cooled for the thermal comfort of people, but can be used for other types of building or other types of use (e.g. industrial, agricultural, swimming pool), as long as appropriate input data are chosen and the impact of special physical conditions on the accuracy is taken into consideration.

NOTE 1 For instance, it can be used when a special model is needed but is missing.

Depending on the purpose of the calculation, it may be decided nationally to provide specific calculation rules for spaces that are dominated by process heat (e.g. indoor swimming pool, computer/server room or kitchen in a restaurant).

NOTE 2 For instance, in the case of a building energy certificate and/or building permit, e.g. by ignoring the process heat or using default process heat for certain processes (e.g. shops: freezers, lighting in shop window).

The calculation procedures in this International Standard are restricted to sensible heating and cooling. The energy use due to humidification is calculated in the relevant standard on the energy performance of ventilation systems, as specified in Annex A; similarly, the energy use due to dehumidification is calculated in the relevant standard on the energy performance of space cooling systems, as specified in Annex A.

The calculation is not used to decide whether mechanical cooling is needed.

This International Standard is applicable to buildings at the design stage and to existing buildings. The input data directly or indirectly called for by this International Standard should be available from the building files or the building itself. If this is not the case, it is explicitly stated at relevant places in this International Standard that it may be decided at national level to allow for other sources of information. In this case, the user reports which input data have been used and from which source. Normally, for the assessment of the energy performance for an energy performance certificate, a protocol is defined at national or regional level to specify the type of sources of information and the conditions when they may be applied instead of the full required input.

2 Normative references

The following referenced documents are indispensable for the application of this document. For dated references, only the edition cited applies. For undated references, the latest edition of the referenced document (including any amendments) applies.

ISO 6946, *Building components and building elements — Thermal resistance and thermal transmittance — Calculation method*

ISO 7345, *Thermal insulation — Physical quantities and definitions*

ISO 10077-1, *Thermal performance of windows, doors and shutters — Calculation of thermal transmittance — Part 1: General*

ISO 13370:2007, *Thermal performance of buildings — Heat transfer via the ground — Calculation methods*

ISO 13786:2007, *Thermal performance of building components — Dynamic thermal characteristics — Calculation methods*

ISO 13789:2007, *Thermal performance of buildings — Transmission and ventilation hea transfer coefficients — Calculation method*

ISO 15927-4, *Hygrothermal performance of buildings — Calculation and presentation of climatic data — Part 4: Hourly data for assessing the annual energy use for heating and cooling*

EN 15217, *Energy performance of buildings — Methods for expressing energy performance and for energy certification of buildings*

© ISO 2008 – All rights reserved
Documents
Document Sharing Hub
Full document details: BS EN ISO 13790:2008

3 Terms and definitions

For the purposes of this document, the terms and definitions in ISO 7345 and the following apply.

3.1 Time steps, periods and seasons

3.1.1
calculation step
discrete time interval for the calculation of the energy needs and uses for heating, cooling, ventilation, humidification and dehumidification

NOTE Typical discrete time intervals are one hour, one month or one heating and/or cooling season, operating modes and bins.

3.1.2
calculation period
period of time over which the calculation is performed

NOTE The calculation period can be divided into a number of calculation steps.

3.1.3
heating or cooling season
period of the year during which a significant amount of energy for heating or cooling is needed

NOTE 1 The lengths of the heating and cooling seasons are determined in different ways, depending on the calculation method. The season lengths are used to determine the operation period of technical systems or season-dependent user behaviour, for instance on ventilation.

NOTE 2 This International Standard includes a seasonal method that requires as calculation step a fixed season length that has to be distinguished from the actual season length.

3.1.4
unoccupied period
period of several days or weeks without heating or cooling, e.g. due to holidays

3.2 Spaces, zones and areas

3.2.1
heated space
room or enclosure, which for the purposes of a calculation is assumed to be heated to a given set-point temperature or set-point temperatures

3.2.2
cooled space
room or enclosure, which for the purposes of a calculation is assumed to be cooled to a given set-point temperature or set-point temperatures

3.2.3
conditioned space
heated and/or cooled space

NOTE The heated and/or cooled spaces are used to define the boundaries of the thermal zones and the thermal envelope.

3.2.4
unconditioned space
room or enclosure that is not part of a conditioned space

© ISO 2008 – All rights reserved

Documents
Document Sharing Hub
Full document details: BS EN ISO 13790:2008

3.2.5
conditioned zone
part of a conditioned space with a given set-point temperature or set-point temperatures, throughout which the same occupancy pattern is assumed and the internal temperature is assumed to have negligible spatial variations, and which is controlled by a single heating system, cooling system and/or ventilation system, or by different systems with equal energy performance

3.2.6
conditioned area
floor area of conditioned spaces excluding non-habitable cellars or non-habitable parts of a space, including the floor area on all storeys if more than one

NOTE 1 Internal, overall internal or external dimensions can be used. This leads to different areas for the same building.

NOTE 2 Some services, such as lighting or ventilation, might be provided to areas not included in this definition (e.g. a car park).

NOTE 3 The precise definition of the conditioned area is given by national authorities.

NOTE 4 "Conditioned area" can be taken as the useful area mentioned in the Clauses 5, 6 and 7 of the EPBD [26] unless it is otherwise defined in national regulations.

3.2.7
calculation with coupled zones
multi-zone calculation with thermal coupling between zones, taking into account any heat transfer by thermal transmission and/or by ventilation and/or by air infiltration between zones

3.2.8
calculation with uncoupled zones
multi-zone calculation without thermal coupling between zones, not taking into account any heat transfer by thermal transmission or by ventilation or by air infiltration between zones

3.2.9
projected area of solar collecting elements
area of the projection of the surface of the element on to a plane parallel to the transparent or translucent part of the element

NOTE In the case of non-flat elements, this refers to the area of the imaginary of the smallest plane connecting the perimeter of the element.

EXAMPLE Windows.

3.2.10
projected area of frame elements
area of the projection of the frame element on to a plane parallel to the glazing or panel that is held by the frame

EXAMPLE Window frames.

3.3 Temperatures

3.3.1
external temperature
temperature of external air

NOTE 1 For transmission heat transfer calculations, the radiant temperature of the external environment is supposed equal to the external air temperature; long-wave radiation to the sky, from building elements facing the sky, is calculated separately (see 11.3.5 and/or 11.4.6).

NOTE 2 The measurement of external air temperature is defined in ISO 15927-1.

© ISO 2008 – All rights reserved
Documents
Document Sharing Hub
Full document details: BS EN ISO 13790:2008

3.3.2
internal temperature
arithmetic average of the air temperature and the mean radiant temperature at the centre of a zone or space

NOTE This is the approximate operative temperature according to ISO 7726.

3.3.3
set-point (of the internal) temperature
internal (minimum intended) temperature as fixed by the control system in normal heating mode, or internal (maximum intended) temperature as fixed by the control system in normal cooling mode

NOTE The values are specified at national level, depending on the type of space and purpose of the calculation. See also definition of conditioned space (3.2.3). For monthly and seasonal methods, the value of the set-point can include adjustment for intermittency, as specified in 13.2.2.

3.3.4
set-back temperature
minimum internal temperature to be maintained during reduced heating periods, or maximum internal temperature to be maintained during reduced cooling periods

3.3.5
intermittent heating or cooling
heating or cooling pattern where normal heating or cooling periods alternate with periods of reduced or no heating or cooling

3.4 Energy

3.4.1
energy need for heating or cooling
heat to be delivered to, or extracted from, a conditioned space to maintain the intended temperature conditions during a given period of time

NOTE 1 The energy need is calculated and cannot easily be measured.

NOTE 2 The energy need can include additional heat transfer resulting from non-uniform temperature distribution and non-ideal temperature control, if they are taken into account by increasing (decreasing) the effective temperature for heating (cooling) and not included in the heat transfer due to the heating (cooling) system.

3.4.2
auxiliary energy
electrical energy used by technical building systems for heating, cooling, ventilation and/or domestic water to support energy transformation to satisfy energy needs

NOTE 1 This includes energy for fans, pumps, electronics, etc. Electrical energy input to a ventilation system for air transport and heat recovery is not considered as auxiliary energy, but as energy use for ventilation (3.4.11).

NOTE 2 In ISO 9488, the energy used for pumps and valves is called “parasitic energy”.

3.4.3
technical building system
technical equipment for heating, cooling, ventilation, domestic hot water, lighting and electricity production

NOTE 1 A technical building system can refer to one or to several building services (e.g. heating system, heating and domestic hot water system).

NOTE 2 A technical building system is composed of different subsystems.

NOTE 3 Electricity production can include cogeneration and photovoltaic systems.

© ISO 2008 – All rights reserved

Documents
Document Sharing Hub
Full document details: BS EN ISO 13790:2008

3.4.4
technical building subsystem
part of a technical building system that performs a specific function (e.g. heat generation, heat distribution, heat emission)

3.4.5
building services
services provided by the technical building systems and by appliances to provide the indoor climate conditions, domestic hot water, illumination and other services related to the use of the building

3.4.6
system thermal loss
thermal loss from a technical building system for heating, cooling, domestic hot water, humidification, dehumidification or ventilation that does not contribute to the useful output of the system

NOTE 1 A system loss can become an internal heat gain for the building if it is recoverable.

NOTE 2 Thermal energy recovered directly in the subsystem is not considered as a system thermal loss but as heat recovery and directly treated in the related system standard.

NOTE 3 Heat dissipated by the lighting system or by other services (e.g. appliances of computer equipment) is not part of the system thermal losses, but part of the internal heat gains.

3.4.7
recoverable system thermal loss
part of a technical system thermal loss which can be recovered to lower either the energy need for heating or cooling or the energy use of the heating or cooling system

NOTE 1 This depends whether or not the recoverable system thermal losses are directly taken into account as a reduction to the system losses.

NOTE 2 In this International Standard, if not directly taken into account as a reduction to the system losses, the recoverable system thermal losses are calculated as part of the internal heat gains. It may be decided at national level to report the recoverable system thermal losses separately from the other internal heat gains.

3.4.8
recovered system thermal loss
part of a recoverable system thermal loss which has been recovered to lower either the energy need for heating or cooling or the energy use of the heating or cooling system

NOTE This depends whether or not the recoverable system thermal losses are directly taken into account as a reduction to the system losses.

3.4.9
energy use for space heating or cooling
energy input to the heating or cooling system to satisfy the energy need for heating or cooling, respectively

NOTE If the technical building system serves several purposes (e.g. heating and domestic hot water), it can be difficult to split the energy use into that used for each purpose. It can be indicated as a combined quantity (e.g. energy use for space heating and domestic hot water).

3.4.10
delivered energy for space heating or cooling
energy, expressed per energy carrier, supplied to the technical building systems through the system boundary, to satisfy the uses taken into account (heating, cooling, ventilation, domestic hot water, lighting, appliances, etc.) or to produce electricity

NOTE 1 For active solar and wind energy systems the incident solar radiation on solar panels or on solar collectors, or the kinetic energy of wind is not part of the energy balance of the building.

NOTE 2 Delivered energy can be calculated or it can be measured.

Documents
Document Sharing Hub
© ISO 2008 – All rights reserved
Full document details: BS EN ISO 13790:2008

3.4.11
energy use for ventilation
electrical energy input to a ventilation system for air transport and heat recovery (not including energy input for pre-heating or pre-cooling the air) and energy input to a humidification system to satisfy the need for humidification

3.4.12
energy need for humidification and dehumidification
latent heat in the water vapour to be delivered to, or extracted from, a conditioned space by a technical building system to maintain a specified minimum or maximum humidity within the space

3.4.13
energy use for other services
electrical energy input to the appliances providing other services

NOTE This refers to services other than heating, cooling, domestic hot water, ventilation and lighting.

3.4.14
ventilation-heat recovery
heat recovered from exhaust air to reduce the ventilation heat transfer

3.5 Building heat transfer

3.5.1
heat transfer coefficient
heat flow rate divided by the temperature difference between two environments; specifically used for heat transfer coefficient by transmission or ventilation

NOTE In contrast with a heat gain, the driving force for heat transfer is the difference between the temperature in the considered space and the temperature of the environment at the other side (in the case of transmission) or the supply air temperature (in the case of ventilation).

3.5.2
transmission heat transfer coefficient
heat flow rate due to thermal transmission through the fabric of a building, divided by the difference between the environment temperatures on either side of the construction

NOTE By convention, the sign is positive if the heat flow is going out of the space considered (heat loss).

3.5.3
ventilation heat transfer coefficient
heat flow rate due to air entering an enclosed space, either by infiltration or ventilation, divided by the difference between the internal air temperature and the supply air temperature

NOTE The sign of the coefficient is always positive. By convention, the sign of the heat flow is positive if the supply air temperature is lower than the internal air temperature (heat loss).

3.6 Building heat gains and recoverable system thermal losses

3.6.1
heat gains
heat generated within, or entering into, the conditioned space from heat sources other than energy intentionally utilized for heating, cooling or domestic hot water preparation

NOTE 1 These include internal heat gains and solar heat gains. Sinks that extract heat from the building are included as gains with a negative sign. In contrast with heat transfer, for a heat source (or sink) the difference between the temperature of the considered space and the temperature of the source is not the driving force for the heat flow.

NOTE 2 For summer conditions heat gains with a positive sign constitute extra heat load on the space.

© ISO 2008 – All rights reserved

Documents
Document Sharing Hub
Full document details: BS EN ISO 13790:2008

3.6.2
internal heat gains
heat provided within the building by occupants (sensible metabolic heat) and by appliances such as domestic appliances, office equipment, etc., other than energy intentionally provided for heating, cooling or hot water preparation

NOTE 1 In this International Standard, if not directly taken into account as a reduction to the system losses, the recoverable system thermal losses are included as part of the internal heat gains. It may be decided at national level to report the recoverable system thermal losses separately.

NOTE 2 Included are heat from (warm) or to (cold) process sources that are not controlled for the purpose of heating or cooling or domestic hot-water preparation. The heat extracted from the building, from the indoor environment to cold sources (sinks), is included as gain with a negative sign.

3.6.3
solar heat gains
heat provided by solar radiation entering, directly or indirectly (after absorption in building elements), into the building through windows, opaque walls and roofs, or passive solar devices such as sunspaces, transparent insulation and solar walls

NOTE Active solar devices such as solar collectors are considered as part of the technical building system.

3.6.4
useful heat gains
proportion of internal and solar heat gains that contribute to reducing the energy need for heating

3.6.5
solar irradiation
incident solar heat on a surface, per area of surface

3.7 Building energy balance

3.7.1
gain utilization factor
factor reducing the total monthly or seasonal heat gains in the monthly or seasonal calculation method, to obtain the resulting reduction of the building energy need for heating

NOTE The factor can be applied in the monthly or seasonal calculation of the building energy need for cooling if the alternative method described in Annex D is used.

3.7.2
loss utilization factor
factor reducing the total monthly or seasonal heat transfer in the monthly or seasonal calculation method, to obtain the resulting reduction of the energy need for cooling

NOTE The traditional term “loss”, which originally referred to the heating mode only, is retained for the utilization factor for losses; if the losses are “negative”, there is no utilization.

3.7.3
heat-balance ratio
monthly or seasonal heat gains divided by the monthly or seasonal heat transfer

4 Symbols

Table 1 lists the symbols used in this International Standard.

Table 2 lists the subscripts used in this International Standard.

© ISO 2008 – All rights reserved
Documents
Document Sharing Hub
Full document details: BS EN ISO 13790:2008

Table 1 — Symbols and units

Symbol	Quantity	Unit
A	area	m^2
a	numerical parameter in utilization factor	1
B	correction factor for an unconditioned adjacent space	1
C	effective heat capacity of a conditioned space	J/K
c	specific heat capacity	J/(kg·K)
d	layer thickness	m
E	energy	MJ
F	factor	1
g	total solar energy transmittance of a building element	1
H	heat transfer coefficient	W/K
h	surface coefficient of heat transfer	$W/(m^2 \cdot K)$
I_{sol}	solar irradiance	W/m^2
L	length	m
N	number	1
Q	quantity of heat	MJ
q	heat flow density	W/m^2
q_v	(volumetric) airflow rate	m^3/s
R	thermal resistance	$m^2 \cdot K/W$
T	thermodynamic temperature	K
t	time, period of time	Ms[a]
U	thermal transmittance	$W/(m^2 \cdot K)$
V	volume of air in a conditioned zone	m^3
Z	heat transfer parameter for solar walls	$W/(m^2 \cdot K)$
α	absorption coefficient of a surface for solar radiation	1
γ	heat-balance ratio	1
ε	emissivity of a surface for long-wave thermal radiation	1
η	efficiency, utilization factor	1
θ	centigrade temperature	°C
κ	heat capacity per area	$J/(m^2 \cdot K)$
κ_{sw}	factor related to heat losses of ventilated solar walls	1
Λ	dimensionless ratio between the internal surfaces area and the floor area (see 7.2.2.2)	1
ρ	density	kg/m^3
σ	Stefan-Boltzmann constant ($\sigma = 5{,}67 \times 10^{-8}$)	$W/(m^2 \cdot K^4)$
τ	time constant	h
Φ	heat flow rate, thermal power	W
χ	point thermal transmittance	W/K
Ψ	linear thermal transmittance	W/(m·K)

[a] Hours can be used as the unit of time instead of seconds for all quantities involving time (i.e. for time steps or periods as well as for air change rates), in which case the unit of energy is watt-hours (Wh) instead of joules. In most equations, megajoules are used instead of joules for quantities of heat or energy and megaseconds instead of seconds for time.

© ISO 2008 – All rights reserved

Documents
Document Sharing Hub
Full document details: BS EN ISO 13790:2008

Table 2 — Subscripts

a	air	i	internal (temperature)	rvd	recovered
A	appliances	*i,j,k,m,n*	dummy integers	*s*	designated space
adj	adjusted	in	input	se	surface external
an	annual	interm	intermittent	seas	seasonal
AO	accumulated overtemperature	int	internal (heat)	set	set-point
alt	altitude	is	conductance term[a]	sh	shading
at	coupling term[a]	L	lighting (system)	shut	shutter
aux	auxiliary	lat	latent	si	surface internal
avg	time average	ls	loss	sol	solar (heat gains)
bh	boost heating	m, *m*	monthly, designated month	ss	surface-sky average
c	structure, construction element	m	mass-related conductance or capacitance	sup	supply (of air)
d	design; daily, direct	met	metabolic	sys	system
C	cooling, capacity	mn	mean (time or space)	T	Thermal
C,nd	cooling need, or building need for cooling	ms	conductance term[a]	tb	Thermal bridge
c	convective	nd	need	Tot	Total (system)
calc	calculated	noc	unoccupied period	tot	total
corr	corrected	nrbl	non-recoverable	tr	transmission (heat transfer)
ctr	control	nrvd	non-recovered		
cont	continuous	nren	non-renewable	u	unconditioned
day	daily	nut	non-utilized	ut	utilized
dif	diffuse	ob	obstacles		
dis	distribution	Oc	occupants	V	ventilation (system)
e	external, exterior, envelope	occ	occupied period	v	volume
el	electricity	off	off	ve	ventilation (heat transfer)
em	emission	on	on		
F	frame	op	opaque	W	hot water (system or need)
f	floor	o	overall	w	window
g	ground	P	related to power		
gl	glazing, glazed element	p	partition wall		
gn	gains	pp	peak power		
ht	heat transfer	ps	permanent shading	*y, z*	zone number
h	hourly	r	radiative		
hem	hemispherical	rvd	recovered	⊥	perpendicular
H	heating	rbl	recoverable		
H,nd	heating need, or building need for heating	red	reduced	0	base; reference
HC,nd	heating and/or cooling need; building need for heating and/or cooling	ren	renewable		

[a] For simple hourly method, see 7.2.2.

© ISO 2008 – All rights reserved

Documents
Document Sharing Hub
Full document details: BS EN ISO 13790:2008

5 Outline of the calculation procedures

5.1 Energy balance of building and systems

5.1.1 Introduction

Depending on the situation, the building is partitioned into multiple zones or treated as a single zone.

The energy balance is split into the energy or heat balance at the building level and the energy balance at the system level.

The building energy needs for heating and sensible cooling of the building are calculated on the basis of the heat balance of the building zone(s).

These energy needs for heating and cooling are the input for the energy balance of the heating and cooling systems and ventilation systems.

A multi-step calculation can be required, which may be defined at national level, for instance to account for interactions between different zones (e.g. sharing the same system(s) and/or dissipation from the same system) or between the systems and the building energy balance (e.g. dissipated heat from systems affecting the heat balance of the building), see 7.3.

5.1.2 Energy balance at the building level

The energy (heat) balance at the building zone level includes the following terms (only sensible heat is considered):

— transmission heat transfer between the conditioned space and the external environment, governed by the difference between the temperature of the conditioned zone and the external temperature;

— ventilation heat transfer (by natural ventilation or by a mechanical ventilation system), governed by the difference between the temperature of the conditioned zone and the supply air temperature;

— transmission and ventilation heat transfer between adjacent zones, governed by the difference between the temperature of the conditioned zone and the internal temperature in the adjacent space;

— internal heat gains (including negative gains from heat sinks), for instance from persons, appliances, lighting and heat dissipated in, or absorbed by, heating, cooling, hot water or ventilation systems;

— solar heat gains (which can be direct, e.g. through windows, or indirect, e.g. via absorption in opaque building elements);

— storage of heat in, or release of stored heat from, the mass of the building;

— energy need for heating: if the zone is heated, a heating system supplies heat in order to raise the internal temperature to the required minimum level (the set-point for heating);

— energy need for cooling: if the zone is cooled, a cooling system extracts heat in order to lower the internal temperature to the required maximum level (the set-point for cooling).

NOTE The heat transfer to the external environment is negative when the external temperature is higher than the internal temperature.

The building energy balance may also include energy recovered in the building from various sources, such as recovered ventilation heat losses and recoverable losses from heating and cooling system.

The calculation procedures in this International Standard are restricted to sensible heating and cooling; see 5.1.3.

Documents
Document Sharing Hub

© ISO 2008 – All rights reserved

Full document details: BS EN ISO 13790:2008

In the heat balance over a longer period (e.g. a month), the net amount of heat stored in, or released from, the building mass, resulting from dynamic behaviour, becomes negligible.

5.1.3 Energy balance at the level of the technical building systems

The building energy need for heating and cooling is satisfied by the energy supply from the heating and cooling systems.

At the system level, the energy balance for heating and cooling, if applicable, includes:

— energy need for heating and cooling of the building zone;

— energy from renewable energy systems;

— generation, storage, distribution, emission and control losses of the space heating and cooling systems;

— energy input to the space heating and cooling systems;

— energy input to central pre-heating and pre-cooling of ventilation air, including transport, thermal losses and control;

— special: energy output from the space heating or cooling systems (e.g. exported electricity from a combined heat and power installation).

The system energy balance may also include energy recovered in the system from various sources.

The system energy use is described in Clause 14. More details on the energy use at system level are provided in the relevant system standards, as specified in Annex A.

The calculation procedures in this International Standard are restricted to sensible heating and cooling. The energy use due to humidification shall be calculated in accordance with the relevant standard on the energy performance of ventilation systems, as specified in Annex A; similarly, the energy use due to dehumidification shall be calculated in accordance with the relevant standard on the energy performance of space cooling systems, as specified in Annex A.

5.2 Main structure of calculation procedure

The main structure of the calculation procedure is summarised below. More details on the calculation procedures are presented in the relevant individual clauses.

a) Choose the type of calculation method, in accordance with 5.3.

b) Define the boundaries of the total of conditioned spaces and unconditioned spaces, in accordance with 6.2.

c) If required, define the boundaries of the different calculation zones, in accordance with 6.3.

d) Define the internal conditions for the calculations (Clause 13), the external climate (Annex F) and other environmental data inputs.

e) Calculate, for each time step and building zone, the energy need for heating, $Q_{H,nd}$, and the energy need for cooling, $Q_{C,nd}$.

f) Combine the results for different time steps and different zones serviced by the same systems and calculate the energy use for heating and for cooling taking into account the dissipated heat of the heating and cooling systems, in accordance with Clause 14.

g) Combine the results for different building zones with different systems.

© ISO 2008 – All rights reserved
Documents
Document Sharing Hub
Full document details: BS EN ISO 13790:2008

h) Calculate the operational length of the heating and cooling season, in accordance with 7.4.

i) It may be decided at national level, depending on the application and type of building, to require that the calculation of the energy need for heating and cooling is performed in multiple steps, for instance to account for interactions between the building and the system, or between adjacent zones. The procedures are given in 7.3.

Properties or (conservative) default values can be different for the heating and cooling mode.

With the monthly method, heating and cooling in the same month can be established by calculating 12 months heating mode and 12 months cooling mode.

For the calculation steps, see Figure 2. The numbers in circles refer to the successive calculation steps.

© ISO 2008 – All rights reserved

Documents
Document Sharing Hub
Full document details: BS EN ISO 13790:2008

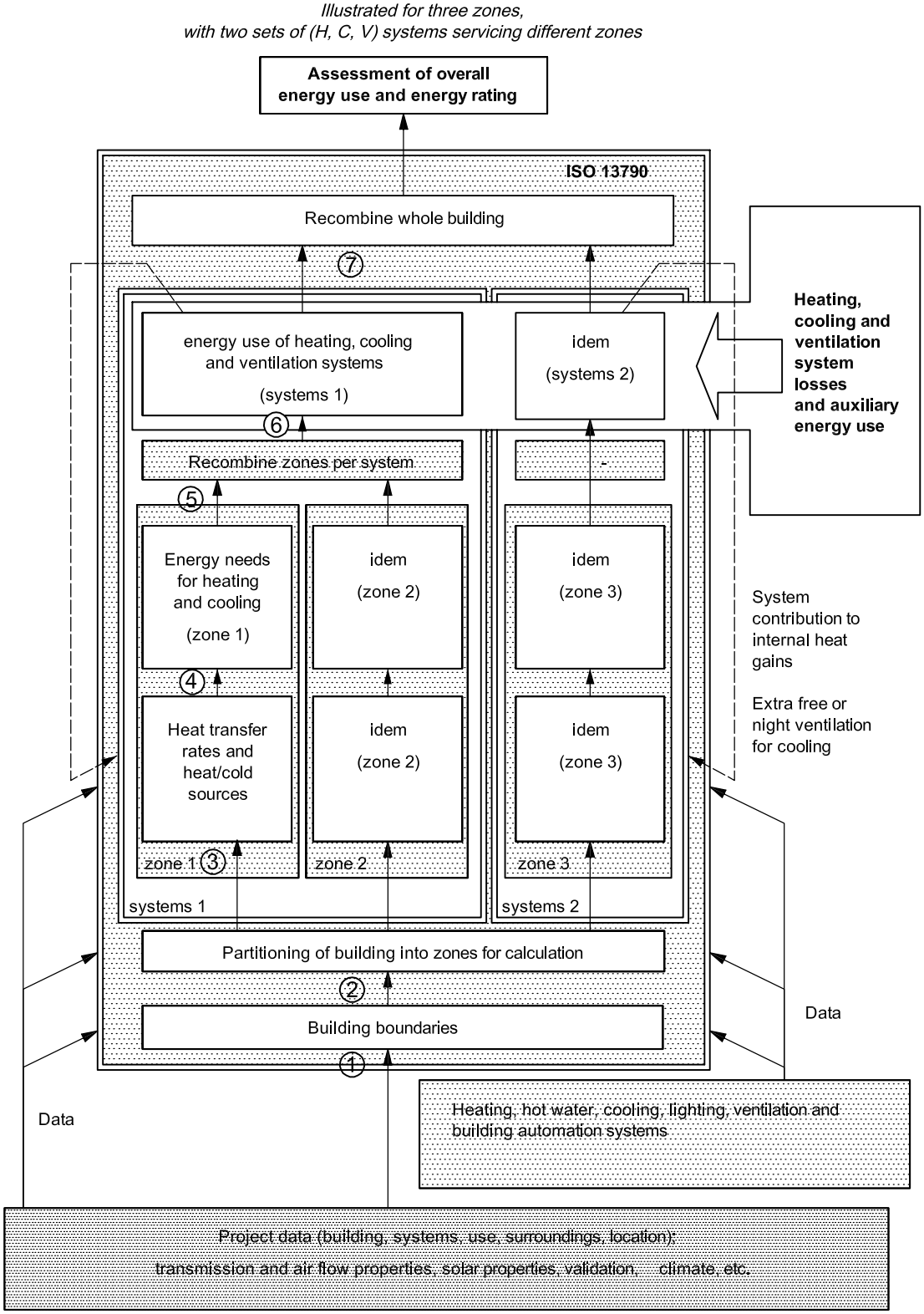

Figure 2 — Flow chart of main calculation steps

© ISO 2008 – All rights reserved

Documents
Document Sharing Hub
Full document details: BS EN ISO 13790:2008

5.3 Different types of calculation method

There are two basic types of method:

— quasi-steady-state methods, calculating the heat balance over a sufficiently long time (typically one month or a whole season), which enables one to take dynamic effects into account by an empirically determined gain and/or loss utilization factor;

— dynamic methods, calculating the heat balance with short times steps (typically one hour) taking into account the heat stored in, and released from, the mass of the building.

This International Standard covers three different types of method:

— a fully prescribed monthly quasi-steady-state calculation method (plus, as a special option, a seasonal method);

— a fully prescribed simple hourly dynamic calculation method;

— calculation procedures for detailed (e.g. hourly) dynamic simulation methods.

The monthly calculation gives correct results on an annual basis, but the results for individual months close to the beginning and the end of the heating and cooling season can have large relative errors.

The alternative simple method for hourly calculations has been added to facilitate the calculation using hourly user schedules (such as temperature set-points, ventilation modes, operation schedule of movable solar shading and/or hourly control options based on outdoor or indoor climatic conditions). This method produces hourly results, but the results for individual hours are not validated and individual hourly values can have large relative errors.

The procedures for the use of more detailed simulation methods ensure compatibility and consistency between the application of different types of method. This International Standard provides common rules for the boundary conditions and physical input data, irrespective of the chosen calculation approach.

At national level, it may be decided which of these three types of method are mandatory or are allowed to be used, depending on the application (purpose of the calculation) and building type.

NOTE This choice typically depends on the use of the building (residential, office, etc.), the complexity of the building and/or systems, the application (energy performance requirement, energy performance certificate or recommended energy performance measures, other). See Annex H about the need to maintain a balance between accuracy, transparency, robustness and reproducibility.

5.4 Main characteristics of the different methods

5.4.1 Dynamic methods

In the dynamic methods, an instantaneous surplus of heat during the heating period has the effect that the internal temperature rises above the set-point, thus removing the surplus heat by extra transmission, ventilation and accumulation, if not mechanically cooled. Also, a thermostat set-back or switch-off might not lead directly to a drop in the internal temperature, due to the inertia of the building (heat released from the building mass). A similar situation applies to cooling.

A dynamic method models thermal transmission, heat flow by ventilation, thermal storage and internal and solar heat gains in the building zone. There are numerous methods to do so, ranging in complexity from simple to very detailed. There are other standards (e.g. EN 15265[11]) describing detailed simulation methods or performance criteria for such methods. This International Standard provides the environment of standardized boundary conditions and standardized input and output data that enables compatibility and consistency between the different methods.

In this International Standard, one simple hourly method is fully specified: a three-node hourly method.

Documents
Document Sharing Hub

© ISO 2008 – All rights reserved

Full document details: BS EN ISO 13790:2008

5.4.2 Quasi-steady-state methods

In the quasi-steady-state methods, the dynamic effects are taken into account by introducing correlation factors.

For heating, a utilization factor for the internal and solar heat gains takes account of the fact that only part of the internal and solar heat gains is utilized to decrease the energy need for heating, the rest leading to an undesired increase of the internal temperature above the set-point.

NOTE 1 See Annex I for a more detailed explanation of the concept of the gain utilization factor for heating.

The effect of thermal inertia in the case of intermittent heating or switch-off is taken into account separately; see Clause 13.

For cooling, there are two different ways to represent the same method:

a) utilization factor for losses (mirror image of the approach for heating): a utilization factor for the transmission and ventilation heat transfer takes account of the fact that only part of the transmission and ventilation heat transfer is utilized to decrease the cooling needs, the “non-utilized” transmission and ventilation heat transfers occur during periods or intervals (e.g. nights) when they have no effect on the cooling needs occurring during other periods or moments (e.g. days);

b) utilization factor for gains (similar as for heating): a utilization factor for the internal and solar heat gains takes account of the fact that only part of the internal and solar heat gains is compensated by thermal heat transfer by transmission and ventilation, assuming a certain maximum internal temperature. The other (“non-utilized”) part leads to cooling needs, to avoid an undesired increase of the internal temperature above the set-point.

This International Standard specifies in the category of quasi-steady-state methods a monthly and seasonal method for heating and cooling following method a). The alternative formulation b) for the monthly cooling method is presented in Annex D.

NOTE 2 See Annex I for a more detailed explanation of the concept of the gain or loss utilization factors for cooling.

The effect of thermal inertia in the case of intermittent cooling or switch-off is taken into account separately; see Clause 13.

More details are given in 7.2.1.

5.5 Overall energy balances for building and systems

The main terms of the (time-averaged) energy balance for heating and cooling are schematically illustrated in a series of diagrams in Annex K.

6 Definition of boundaries and zones

6.1 General

The procedures in this clause apply to all calculation methods: seasonal, monthly, simple hourly and dynamic simulation methods.

First, the boundaries of the building for the calculation of energy needs for heating and cooling shall be defined (see 6.2).

Secondly, the building shall, if necessary, be divided into calculation zones (see 6.3).

© ISO 2008 – All rights reserved
Documents
Document Sharing Hub
Full document details: BS EN ISO 13790:2008

For the purpose of energy performance rating, in accordance with the relevant standards as specified in Annex A, the calculated energy use for heating and/or cooling needs to be related to the floor area. In addition, some of the input values are not known for individual building zones and need to be proportionally allocated to the individual zones, for instance using the conditioned floor area of each zone as weighting factor. Finally, some input data are available at individual building-space level and need to be aggregated to building-zone level. In 6.4 are provided the calculation procedures for the conditioned floor area, which is consistent with the boundaries of the building and (if applicable) with the partitioning into zones.

6.2 Boundary of the building for the calculation

The boundary of the building for the calculation of the energy need for heating and/or cooling consists of all the building elements separating the conditioned space or spaces under consideration from the external environment (air, ground or water) or from adjacent buildings or unconditioned spaces.

Spaces that are not conditioned may be included within the boundary of the building, but in that case they shall be regarded as conditioned spaces.

6.3 Thermal zones

6.3.1 General

It may be necessary to partition a building into different zones, with separate calculation of the energy need for heating and cooling for each zone.

Depending on the conditions as specified in 6.3.2:

— the whole building may be modelled as a single zone;

— the building may be partitioned into several zones (multi-zone calculation), accounting for thermal coupling between the zones;

— the building may be partitioned into several zones (multi-zone calculation), taking no account of thermal coupling between the zones.

The criteria in 6.3.2 apply to all calculation methods (simple or detailed), but for detailed methods further partitioning can apply.

The boundary of a building zone consists of all the building elements separating the conditioned space or spaces under consideration from the external environment (air, ground or water) from adjacent conditioned zones, from adjacent buildings or from unconditioned spaces.

6.3.2 Criteria for partitioning into zones

6.3.2.1 Criteria for single-zone calculation

Small, unconditioned spaces may be included within a conditioned zone, but in that case they shall be regarded as conditioned spaces.

Partitioning of the building into thermal zones is not required if all of the following conditions apply to spaces within the building.

a) Set-point temperatures for heating of the spaces differ by no more than 4 K.

NOTE 1 The set-point is the minimum temperature assumed for the calculation. Specifications are given in Clause 13.

b) The spaces are all not mechanically cooled or all mechanically cooled and set-point temperatures for cooling of the spaces differ by no more than 4 K.

© ISO 2008 – All rights reserved

Documents
Document Sharing Hub
Full document details: BS EN ISO 13790:2008

c) The spaces are serviced by the same heating system (if any) and the same cooling system (if any), in accordance with the relevant standards on heating and cooling systems respectively specified in Annex A.

d) If there is a ventilation system or systems, in accordance with the relevant standard on ventilation systems specified in Annex A, at least 80 % of the floor areas of the spaces are serviced by the same ventilation system (the other spaces are then considered to be serviced by the main ventilation system).

NOTE 2 This 80 % rule is introduced to avoid the situation where it is necessary that extra zones be defined to cater for small spaces like corridors and storage rooms with different ventilation systems.

e) The amount of ventilation in the spaces, expressed in cubic metres per square metre floor area per second, in accordance with the relevant standard on ventilation air flow specified in Annex A, differs by not more than a factor of 4 within 80 % of the floor area, or the doors between the spaces are likely to be frequently open.

NOTE 3 Zoning based on expected large differences in the heat-balance ratio for the heating mode or for the cooling mode is desirable, but not taken into account in the list above because the heat-balance ratio itself depends on the zoning and the calculation of the input data is too labour-intensive (especially in determining areas of building elements) to be done several times or room by room.

If one or more of these conditions does not apply, the building is divided into different zones in a way that all of the conditions apply to the individual zones. Further partitioning into smaller zones is allowed.

NOTE 4 Further partitioning may, for instance, be considered appropriate in the case of different occupancy, internal heat sources or lighting.

Rules for partitioning the building into thermal zones may also be defined at national level, for instance to take into account specific requirements of national or regional building regulations and/or to take into account the application.

Depending on the purpose of the calculation, it may be nationally decided to provide specific calculation rules for spaces that are dominated by process heat (e.g. indoor swimming pool, computer/servers room or a kitchen in a restaurant).

NOTE 5 For instance, in the case of a building energy certificate and/or building permit, ignoring the process heat or using default process heat for certain processes (e.g. shops: freezers, lighting in shop windows).

NOTE 6 For instance, to ensure reproducibility in the case of minimum energy performance requirements; to ensure the right balance between accuracy and costs in the case of inspection of an (old) existing building. See also Annex H.

NOTE 7 Within a specific building zone, there can still be heat dissipating from or to a distribution system of a heating or cooling system servicing another building zone that passes the zone under consideration.

The calculation procedure for a single-zone calculation is given in 6.3.3.1.

6.3.2.2 Criteria for multi-zone calculation without thermal coupling between zones

If the building is partitioned into different zones, it may be decided nationally whether it is allowed to calculate each zone independently using the single-zone procedure for each zone and assuming adiabatic boundaries between the zones. This is defined as a multi-zone calculation without thermal coupling between zones. The calculation procedure is given in 6.3.3.2.

NOTE The decision whether to ignore thermal coupling between zones can depend on the purpose of the calculation and/or the complexity of the building and its systems.

© ISO 2008 – All rights reserved
Documents
Document Sharing Hub
Full document details: BS EN ISO 13790:2008

6.3.2.3 Criteria for multi-zone calculation with thermal coupling between zones

If neither the single-zone calculation nor the multi-zone calculation without thermal coupling between zones applies, the calculation shall be performed as a multi-zone calculation with thermal coupling between zones.

In order to comply with building regulations, it should be noted that a multi-zone calculation with interactions between the zones

a) requires significantly more, and often arbitrary, input data (on transmission properties and air flow direction and size), and

b) requires compliance with constraints in the building regulations on the zoning rules (freedom of internal partitioning, definitions of zoning in the case of combined use (e.g. a hospital generally also includes an office section, a restaurant section).

A further complication can be the involvement of different heating, cooling and ventilation systems for different zones, which adds to the complexity and arbitrariness of the input and modelling.

The calculation procedures are given in 6.3.3.3.

6.3.3 Zone calculation

6.3.3.1 Single-zone calculation

6.3.3.1.1 Set-point temperatures

If the single-zone calculation applies, the set-point temperature, $\theta_{\text{int,H,set}}$, for heating of the building zone is given by Equation (1):

$$\theta_{\text{int,H,set}} = \frac{\sum_s A_{\text{f},s}\theta_{\text{int},s,\text{H,set}}}{\sum_s A_{\text{f},s}} \tag{1}$$

where

$\theta_{\text{int},s,\text{H,set}}$ is the set-point temperature for heating of space s, determined in accordance with Clause 13, expressed in degrees centigrade;

$A_{\text{f},s}$ is the conditioned floor area of space, s, determined in accordance with 6.4, expressed in square metres.

If the single-zone calculation applies, the set-point temperature, $\theta_{\text{int,C,set}}$, for cooling of the building zone is given by Equation (2):

$$\theta_{\text{int,C,set}} = \frac{\sum_s A_{\text{f},s}\theta_{\text{int},s,\text{C,set}}}{\sum_s A_{\text{f},s}} \tag{2}$$

where

$\theta_{\text{int},s,\text{C,set}}$ is the set-point temperature for cooling of space s, determined in accordance with Clause 13, expressed in degrees centigrade;

$A_{\text{f},s}$ is the conditioned floor area of space s, determined in accordance with 6.4, expressed in square metres.

© ISO 2008 – All rights reserved

Documents
Document Sharing Hub
Full document details: BS EN ISO 13790:2008

The averaging is either on seasonal or monthly average data or on hourly data, depending on the type of method and the corresponding procedures in Clause 13.

6.3.3.1.2 Other input data

If the single-zone calculation applies and the zone contains spaces with different building use (internal heat gains, lighting hours, ventilation hours, ventilation rates, etc.) the area-weighted average values of the parameters related to building use shall be used, in the same way as is done for the set-point temperature.

The averaging is either on a seasonal or monthly basis, or hourly input data are used, depending on the type of method and the corresponding procedures in the relevant clauses.

6.3.3.2 Multi-zone calculation, no thermal coupling between zones

For a multi-zone calculation without thermal coupling between zones (calculation with uncoupled zones), no heat transfer by thermal transmission or by air movement between the zones is taken into account.

The calculation with uncoupled zones is regarded as an independent series of single-zone calculations.

For zones sharing the same heating and cooling system, the energy need for heating and cooling is the sum of the energy need calculated for the individual zones (see Clause 14).

For zones not sharing the same heating and cooling system, the energy use for the building is the sum of the energy use calculated for the individual zones (see Clause 14).

6.3.3.3 Multi-zone calculation, thermal coupling between zones

For a multi-zone calculation with thermal coupling between zones (calculation with coupled zones), any heat transfer (by thermal transmission or by air movement) is taken into account.

The procedures for a calculation with coupled zones are given in Annex B.

NOTE See 6.3.2.3 for this type of calculation. The procedure is normally used only for special situations.

6.4 Determination of conditioned floor area, A_f

The floor area within the boundary of the building is the conditioned floor area, A_f, of the building (see 3.2). The type of dimension system used to calculate A_f (internal dimensions, external dimensions or overall internal dimensions) may be determined at national level, but it is necessary that it be specified. The same applies to possible parts of the floor area within the boundary of the building that are or are not part of the conditioned floor area, A_f.

NOTE Parts of the floor area within the boundary of the building that, possibly, are not part of the conditioned floor area, A_f , are, for example, areas of the floor where the space has a height less than a specified height, and the area of supporting walls. Parts of the floor area within the boundary of the building that, possibly, are part of the conditioned floor area, A_f, are, for example, the area of non-supporting walls.

If applicable, the conditioned floor area of a building zone is determined similarly for each calculation zone in the building. The sum of conditioned floor areas of all zones shall be equal to the conditioned floor area of the building.

If necessary, the conditioned floor area of a space in the building zone is determined similarly for each space in the building zone. The sum of conditioned floor areas of all spaces in the building zone shall be equal to the conditioned floor area of the building zone.

© ISO 2008 – All rights reserved
Documents
Document Sharing Hub
Full document details: BS EN ISO 13790:2008

7 Building energy need for space heating and cooling

7.1 Calculation procedure

The calculation procedure depends on the type of calculation method, but the assumptions (of environment conditions, user behaviour and controls) and the basic physical data shall be the same for each of the types of calculation methods (seasonal, monthly, simple hourly and detailed simulation methods).

There are three steps of the calculation:

1) calculation of the energy need for heating and cooling;

2) calculation of the season length for the operation of season-length-dependent provisions;

3) possible repetition of the calculation due to the interaction of the building and system, or for other informative or normative reasons as specified in the relevant clause.

See Table 3.

Table 3 — Calculation procedure for the energy need for space heating and cooling for the different types of method

Type of method	Calculation of energy need for heating and cooling	Calculation of season length for operation of provisions	Multiple steps
Seasonal or monthly method	7.2.1	7.4	7.3
Simple hourly method	7.2.2	7.4	7.3
Detailed simulation method	7.2.3	7.4	7.3

The calculation procedure to obtain the energy need for space heating and cooling of the building zone is summarised in the following list. This part of the procedure describes in more detail steps d) and e) of the main calculation procedure as presented in 5.2.

a) Calculate the internal conditions in accordance with Clause 13, the climate conditions in accordance with Annex F and other relevant environmental data inputs.

b) Calculate the characteristics for the heat transfer by transmission, in accordance with Clause 8.

c) Calculate the characteristics for the heat transfer by ventilation, in accordance with Clause 9.

d) Calculate the internal heat gains, in accordance with Clause 10.

e) Calculate the solar heat gains, in accordance with Clause 11.

f) Calculate the dynamic parameters, in accordance with Clause 12.

With the monthly method, heating and cooling in the same month can be established by calculating 12 months heating mode and 12 months cooling mode, each with own parameter values (e.g. ventilation, heat recovery, etc.).

© ISO 2008 – All rights reserved

Documents
Document Sharing Hub
Full document details: BS EN ISO 13790:2008

7.2 Energy need for heating and cooling

7.2.1 Monthly and seasonal methods

7.2.1.1 Energy need for heating

For each building zone and each calculation step (month or season), the building energy need for space heating, $Q_{H,nd}$, for conditions of continuous heating, is calculated as given by Equation (3):

$$Q_{H,nd} = Q_{H,nd,cont} = Q_{H,ht} - \eta_{H,gn}\, Q_{H,gn} \tag{3}$$

where (for each building zone, and for each month or season)

$Q_{H,nd,cont}$ is the building energy need for continuous heating, assumed to be greater than or equal to 0, expressed in megajoules;

$Q_{H,ht}$ is the total heat transfer for the heating mode, determined in accordance with 7.2.1.3, expressed in megajoules;

$Q_{H,gn}$ gives the total heat gains for the heating mode, determined in accordance with 7.2.1.3, expressed in megajoules;

$\eta_{H,gn}$ is the dimensionless gain utilization factor, determined in accordance with 12.2.1.

For each building zone and each calculation step (month or season), the building energy need for space heating, $Q_{H,nd}$, for conditions of intermittent heating, if the conditions of 13.1 apply, is given by Equation (4):

$$Q_{H,nd} = Q_{H,nd,interm} \tag{4}$$

where $Q_{H,nd,interm}$ is determined in accordance with 13.2.2.

For situations with a long unoccupied period, $Q_{H,nd}$ is determined with the correction in accordance with 13.2.4.

The latent energy need for humidification is not included in this calculation.

NOTE 1 The gain utilization factor, $\eta_{H,gn}$, is explained in 5.4.2. It is a function mainly of the heat-balance ratio and the thermal inertia of the building, as illustrated in Figure 5.

The calculation step for the seasonal method shall be the fixed heating season length, as explained in 7.2.1.4. For the monthly method, the calculation step is 1 month.

NOTE 2 I.3 provides a method for determining the fixed season length for the seasonal method.

7.2.1.2 Energy need for cooling

For each building zone and each calculation step (month or season), the energy need for space cooling, $Q_{C,nd}$, for conditions of continuous cooling, is calculated in accordance with Equation (5):

$$Q_{C,nd} = Q_{C,nd,cont} = Q_{C,gn} - \eta_{C,ls}\, Q_{C,ht} \tag{5}$$

where (for each building zone, and for each month or season)

$Q_{C,nd,cont}$ is the building energy need for continuous cooling, assumed to be greater than or equal to 0, expressed in megajoules;

$Q_{C,ht}$ is the total heat transfer for the cooling mode, determined in accordance with 7.2.1.3, expressed in megajoules;

© ISO 2008 – All rights reserved
Documents
Document Sharing Hub
Full document details: BS EN ISO 13790:2008

$Q_{C,gn}$ gives the total heat gains for the cooling mode, determined in accordance with 7.2.1.3, expressed in megajoules;

$\eta_{C,ls}$ is the dimensionless utilization factor for heat losses, determined in accordance with 12.2.1.

For each building zone and each calculation step (month or season), the building energy need for space cooling, $Q_{C,nd}$, for conditions of intermittent cooling, if the conditions of 13.1 apply, is given by Equation (6):

$$Q_{C,nd} = Q_{C,nd,interm} \quad (6)$$

where $Q_{C,nd,interm}$ is determined in accordance with 13.2.2.

For situations with a long unoccupied period, $Q_{C,nd}$ is determined with the correction in accordance with 13.2.4.

The energy need for latent cooling (dehumidification) is not included in this calculation.

NOTE 1 The principle of the utilization factor for losses, $\eta_{C,ls}$, is explained in 5.4.2 [cooling, method a)]. It is a function mainly of the heat-balance ratio and thermal inertia of the building as illustrated in Figure 6. A negative value for $Q_{C,ht}$ is allowed: in that case the utilization factor has the value 1 and, consequently, the negative losses are added as gains.

The calculation step for the seasonal method shall be the fixed cooling season length, as explained in 7.2.1.4. For the monthly method, the calculation step is 1 month.

NOTE 2 I.3 provides a method for determining the fixed season length for the seasonal method.

7.2.1.3 Total heat transfer and heat gains

For each building zone and each calculation step (month or season), the total heat transfer, Q_{ht}, is given by Equation (7):

$$Q_{ht} = Q_{tr} + Q_{ve} \quad (7)$$

where (for each building zone and for each calculation step)

Q_{tr} is the total heat transfer by transmission, determined in accordance with Clause 8, expressed in megajoules;

Q_{ve} is the total heat transfer by ventilation, determined in accordance with Clause 9, expressed in megajoules.

The total heat gains, Q_{gn}, of the building zone for a given calculation step, are calculated using Equation (8):

$$Q_{gn} = Q_{int} + Q_{sol} \quad (8)$$

where (for each building zone and for each calculation step)

Q_{int} is the sum of internal heat gains over the given period, determined in accordance with Clause 10, expressed in megajoules;

Q_{sol} is the sum of solar heat gains over the given period, determined in accordance with Clause 11, expressed in megajoules.

7.2.1.4 Seasonal method — fixed length of heating and cooling season for the heat balance calculation

The fixed length of the heating season is needed for the calculation of total heat transfer and total heat gains during the heating season. This fixed length is directly linked to the parameters that determine the values of the gain utilization factor (see 12.2.1).

© ISO 2008 – All rights reserved

Documents
Document Sharing Hub
Full document details: BS EN ISO 13790:2008

This length may be determined at national level. Annex I contains a method that may be used to determine the fixed length of the heating and the cooling season for the seasonal method.

7.2.2 Simple hourly method

7.2.2.1 Principle

The model is a simplification of a dynamic simulation, with the following intention:

— same level of transparency, reproducibility and robustness as the monthly method:

  — clearly specified, limited set of equations, enabling traceability of the calculation process;

  — reduction of the input data as much as possible;

  — unambiguous calculation procedures;

— with main advantage over the monthly method that the hourly time intervals enable direct input of hourly patterns.

NOTE 1 The advantages and disadvantages of the simple hourly versus monthly method are described in more detail in Annex H and in the Bibliographic Reference [24].

In addition, the model

— makes new development easy by using directly the physical behaviour to be implemented,

— keeps an adequate level of accuracy, especially for room-conditioned buildings where the thermal dynamic of the room behaviour is of high impact.

The model used is based on an equivalent resistance-capacitance (R-C) model. It uses an hourly time step and all building and system input data can be modified each hour using schedule tables (in general, on a weekly basis).

The model makes a distinction between the internal air temperature and mean temperature of the internal (building zone facing) surfaces (mean radiant temperature). This enables its use in principle for thermal comfort checks and increases the accuracy of taking into account the radiative and convective parts of solar, lighting, and internal heat gains, although the results of the simple method at hourly level are not reliable.

The calculation method is based on simplifications of the heat transfer between the internal and external environment, as shown in Figure 3.

The heating and/or cooling need is found by calculating for each hour the need for heating or cooling power, $\Phi_{HC,nd}$ (positive for heating and negative for cooling), that needs to be supplied to, or extracted from, the internal air node, θ_{air}, to maintain a certain minimum or maximum set-point temperature. The set-point temperature is a weighted mean of air and mean radiant temperature. The default weighting factor is 0,5 for each.

Heat transfer by ventilation, H_{ve}, is connected directly to the air temperature node, θ_{air}, and to the node representing the supply air temperature, θ_{sup}. Heat transfer by transmission is split into the window part, $H_{tr,w}$, taken as having zero thermal mass, and the remainder, $H_{tr,op}$, containing the thermal mass which in turn is split into two parts: $H_{tr,em}$ and $H_{tr,ms}$. Solar and internal heat gains are distributed over the air node, θ_{air}, the central node, θ_s (a mix of θ_{air} and mean radiant temperature $\theta_{r,mn}$) and the node representing the mass of the building zone, θ_m. The thermal mass is represented by a single thermal capacity, C_m, located between $H_{tr,ms}$ and $H_{tr,em}$. A coupling conductance is defined between the internal air node and the central node. The heat flow rate due to internal heat sources, Φ_{int}, and the heat flow rate due to solar heat sources, Φ_{sol}, are split amongst the three nodes.

© ISO 2008 – All rights reserved
Documents
Document Sharing Hub
Full document details: BS EN ISO 13790:2008

NOTE 2 "Window part" is here a generic term. It also includes doors and all glazed elements of the building envelope, but none of the insulated opaque components.

The hourly energy needs for heating and/or cooling, $Q_{HC,nd}$, expressed in megajoules, are obtained by multiplying $\Phi_{HC,nd}$, expressed in watts, by 0,036. Similarly, the internal and solar heat gains, Q_{int} and Q_{sol}, expressed in megajoules, are obtained by multiplying Φ_{int} and Φ_{sol} respectively, expressed in watts, by 0,036.

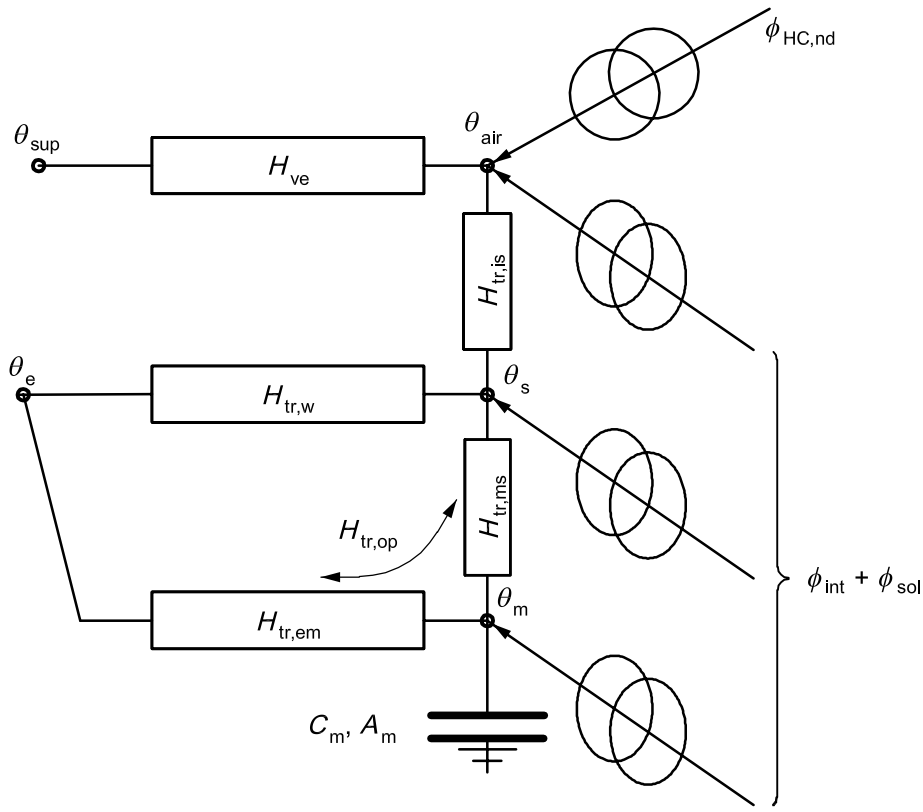

Figure 3 — Five resistances, one capacitance (5R1C) model

7.2.2.2 Main variables

The main variables for the model are the following:

— the thermal transmission coefficients, $H_{tr,w}$, of doors, windows, curtain walls and glazed walls and $H_{tr,op}$, of opaque building elements obtained from 8.3 and split into $H_{tr,em}$ and $H_{tr,ms}$ in accordance with 12.2.2;

— the ventilation characteristics, H_{ve} and θ_{sup}, obtained from 9.3;

— the coupling conductance, $H_{tr,is}$;

— the internal heat capacity, C_m, is obtained from 12.3.1, expressed in joules per kelvin.

The coupling conductance, $H_{tr,is}$, expressed in watts per kelvin, between the air node, θ_{air}, and the surface node, θ_s, is as given by Equation (9):

$$H_{tr,is} = h_{is} A_{tot} \tag{9}$$

where

h_{is} is the heat transfer coefficient between the air node, θ_{air}, and the surface node, θ_s, with a fixed value of $h_{is} = 3{,}45$ W/(m^2·K);

© ISO 2008 – All rights reserved

Documents
Document Sharing Hub
Full document details: BS EN ISO 13790:2008

A_{tot} is the area of all surfaces facing the building zone, equal to $\Lambda_{at} \times A_f$, expressed in square metres;

A_f is the conditioned floor area, in accordance with 6.4, expressed in square metres;

Λ_{at} is the dimensionless ratio between the internal surfaces area and the floor area; Λ_{at} can be assumed to be equal to 4,5.

For a given hour, all values are known except $\Phi_{HC,nd}$, which it is necessary to calculate.

Full details are given in the respective clauses. The full set of equations is given in Annex C.

The monthly heating and cooling energy need is obtained by summing the hourly heating and cooling energy need, as described in 14.1.

7.2.2.3 Calculation of heat flows from internal and solar heat sources

As shown in C.2, the heat flows from internal and solar heat sources are split between the air node, θ_{airt}, and the internal nodes, θ_{int}, θ_m as given by Equations (C.1), (C.2) and (C.3).

The heat flow rate from internal heat sources Φ_{int} is obtained from 10.2 and the heat flow rate from solar heat sources, Φ_{sol}, is obtained from 11.2.

A_t is obtained from 7.2.2.2 and A_m is obtained from 12.2.2.

7.2.3 Detailed simulation method

Dynamic methods used for the calculation of energy need of heating and cooling shall have passed the validation tests in accordance with the relevant standards containing validation tests for detailed simulation methods as specified in Annex A.

In addition, for the aspects not covered by the validation tests, in the case of comparison of the energy performance level of buildings and/or for checking compliance with national or regional building regulations, the procedure shall be used as prescribed, or referred to, in this International Standard.

Consequently, the calculation shall be performed according to the following:

— partitioning into zones, see 6.3;

— transmission heat transfer characteristics, see Clause 8;

— ventilation heat transfer characteristics, see Clause 9;

— internal heat gains, see Clause 10;

— solar heat gains, see Clause 11;

— dynamic parameters, see Clause 12;

— internal conditions, see Clause 13.

© ISO 2008 – All rights reserved
Documents
Document Sharing Hub
Full document details: BS EN ISO 13790:2008

NOTE In particular when the calculation results are to be used in the context of checking for compliance with building regulations it is important that calculation tools are checked in full detail on compliance with the general procedures, boundary conditions and input data. If there is a conflict with the procedures in this International Standard, this may lead to differences in the results that remain undetected and therefore lead to variability of results. Such tools are in general difficult to check. Relevant aspects include:

— (dynamic) heat transfer via the ground, including thermal bridges;

— non-adiabatic internal walls and floors;

— linear thermal bridges;

— air flows between building zones;

— solar shading by, and reflection from, overhangs, fins and external obstacles;

— angle-dependent solar properties of windows;

— hourly calculation of air infiltration.

7.3 Multiple steps to integrate or isolate interactions

7.3.1 Type of method and purpose

Due to interactions between building and system, between zones and/or other interactions, multiple steps may be required for the calculation.

If the purpose is to take the interaction into account, these iterations are, if possible, performed at the smallest time interval of the calculation, depending on the type of calculation method: hour, month or season.

If the purpose is to isolate the effect of the interaction, these iterations shall be performed on a monthly or seasonal basis.

7.3.2 To account for interaction between building and systems

The heat gains (including negative gains, from heat sinks) comprise the heat losses from the heating and cooling system. Before the dissipated heat from the heating and cooling system can be calculated, it might be necessary to calculate first the energy needs for heating and cooling without these elements in the internal heat gains.

With this information, the dissipated heat from the heating and cooling system can be calculated, followed by a second and final calculation of the energy needs for heating and cooling.

NOTE 1 In principle, a full iteration would be required, but a full iteration will usually not lead to an improvement of the overall accuracy of the result and a two-step approach suffices.

NOTE 2 The result of the first step also gives insight into the performance of the building without the influence of the heating and cooling system.

Consequently, depending on the application and type of building it may be decided at national level to require that the calculation of the energy need for heating and cooling is performed in two or more steps: first a calculation without dissipated heat from the heating and cooling system (when this cannot be predicted without knowing the heating and cooling needs), followed by a calculation or iteration including dissipated heat from the heating and cooling system, based on the information from the first calculation.

Optionally, other internal heat gain sources (positive or negative) may be subjected to the same procedure to quantify (isolate) their effect on the energy needs for heating and cooling.

© ISO 2008 – All rights reserved

Documents
Document Sharing Hub
Full document details: BS EN ISO 13790:2008

NOTE 3 The result will depend on the order in which the internal heat gains are added to the calculation. Moreover, the effect on the energy needs can be misleading; for instance, the internal heat gains from lighting will lead to a decrease in energy need for heating (winter) and increase of energy need for cooling (summer). However, in many cases it is more relevant to try to prevent summer cooling, e.g. by an investment in a free cooling or night-time ventilation system and/or extra solar shading provisions; in that case the impact on the energy need for cooling is zero, but the impact on the investment costs is significant, though this penalty is not shown.

In the case of a single-step calculation, it may also be decided at national level to apply a simplified approach. One way is to adjust specific system losses directly at the system level to account for recovered losses at building level and disregard these as input in the building energy balance. Another is to make estimates of the recoverable system losses and include these in the internal heat gains for the building part of the calculation.

NOTE 4 The first option can lead to significant errors if the effect of the recoverable losses on the building energy balance is large or strongly different from the situation on which the adjustment was based.

7.3.3 To quantify seasonal special provisions

Similarly, depending on the application and type of building, it may be decided at national level to require that the calculation of the energy need for cooling is performed in two or more steps: first a calculation without free cooling or night-time cooling by ventilation, followed by a calculation with free cooling or night-time cooling by ventilation for those periods where the first calculation indicated that one or both of these are feasible options to decrease the energy need for cooling.

7.3.4 To quantify the effect of imperfect temperature control

It may also be nationally decided to repeat the calculation with variations on the input data to quantify effects of imperfect temperature control.

7.3.5 To account for interaction between zones

In the case of a multi-zone calculation with thermally coupled zones in accordance with 6.3.2.3, iteration is also required.

7.3.6 To obtain breakdown into components

Optionally, it may also be relevant to repeat the overall calculation, e.g. by successively excluding specific elements in the calculation, to quantify the effect of specific elements on the result. In particular:

— the building energy need for heating and cooling in the absence of a heat recovery unit in a mechanical ventilation system; this will provide a result more closely related to the performance of the building itself, although a complete separation will not be possible, because the building will still contain specific design choices related to heat recovery, such as a higher air tightness;

— the passive solar energy gains by replacing the windows (and any sunspace or other passive solar provision) by a reference set of windows having a reference (neutral) orientation, size and (optionally) a reference thermal transmittance; similarly passive cooling techniques.

NOTE Warning: when a number of alternative energy saving measures are being considered, the order in which the measures are successively added in the calculation will affect the calculated individual effect of each measure.

© ISO 2008 – All rights reserved
Documents
Document Sharing Hub
Full document details: BS EN ISO 13790:2008

7.4 Length of heating and cooling seasons for operation of season-length-dependent provisions

7.4.1 Monthly method

7.4.1.1 Heating season

In the absence of a national method, the actual length of heating season to determine the number of hours of operation of certain season-length-dependent provisions (e.g. pumps, fans, central pre-heating; see 14.3) can be determined as follows.

The actual length of the heating season, L_H, expressed in the number of months, is calculated by using Equation (10):

$$L_H = \sum_{m=1}^{m=12} f_{H,m} \tag{10}$$

where $f_{H,m}$ is the fraction of the month that is part of the heating season.

Determine f_H for each month according to one of the following two methods:

— method a: simplified method, on the basis of the ratio between the energy need for heating and cooling;

— method b: on the basis of the monthly values for the heat-balance ratio for the heating mode, γ_H, determined in accordance with 12.2.1.1.

Method a:

The fraction of the month that is part of the heating season, is calculated by using Equation (11):

$$f_H = Q_{H,nd} / (Q_{H,nd} + Q_{C,nd} + Q_{V,pre\text{-}heat} + Q_{V,pre\text{-}cool}) \tag{11}$$

where

$Q_{H,nd}$ is the monthly energy need for heating, expressed in megajoules, determined in accordance with 7.2.1.1;

$Q_{C,nd}$ is the monthly energy need for cooling, expressed in megajoules, determined in accordance with 7.2.1.2;

$Q_{V,pre\text{-}heat}$ is the energy need for pre-heating of ventilation air, expressed in megajoules, determined in accordance with 9.3.3.12;

$Q_{V,pre\text{-}cool}$ is the energy need for pre-cooling of ventilation air, expressed in megajoules, determined in accordance with 9.3.3.12.

Method b:

Determine first the limit value of the dimensionless heat-balance ratio for the heating mode, $\gamma_{H,lim}$, as given by Equation (12):

$$\gamma_{H,lim} = (a_H + 1) / a_H \tag{12}$$

where a_H is a dimensionless numerical parameter depending on the time constant of the building, determined in accordance with 12.2.1.1.

© ISO 2008 – All rights reserved

Documents
Document Sharing Hub
Full document details: BS EN ISO 13790:2008

NOTE The value for $\gamma_{H,lim}$ corresponds to the point at the *ideal* gain utilization curve with gain utilization factor equal to the *actual* gain utilization factor at $\gamma_H = 1$. A lower curve (less utilization, lower a_H) leads to a higher limit; in an ideal situation the limit is $\gamma_{H,lim} = 1$: the gain utilization factor =1 and the monthly heat gains are just enough to compensate the monthly heat losses by transmission and ventilation heat transfer. See Figure 4.

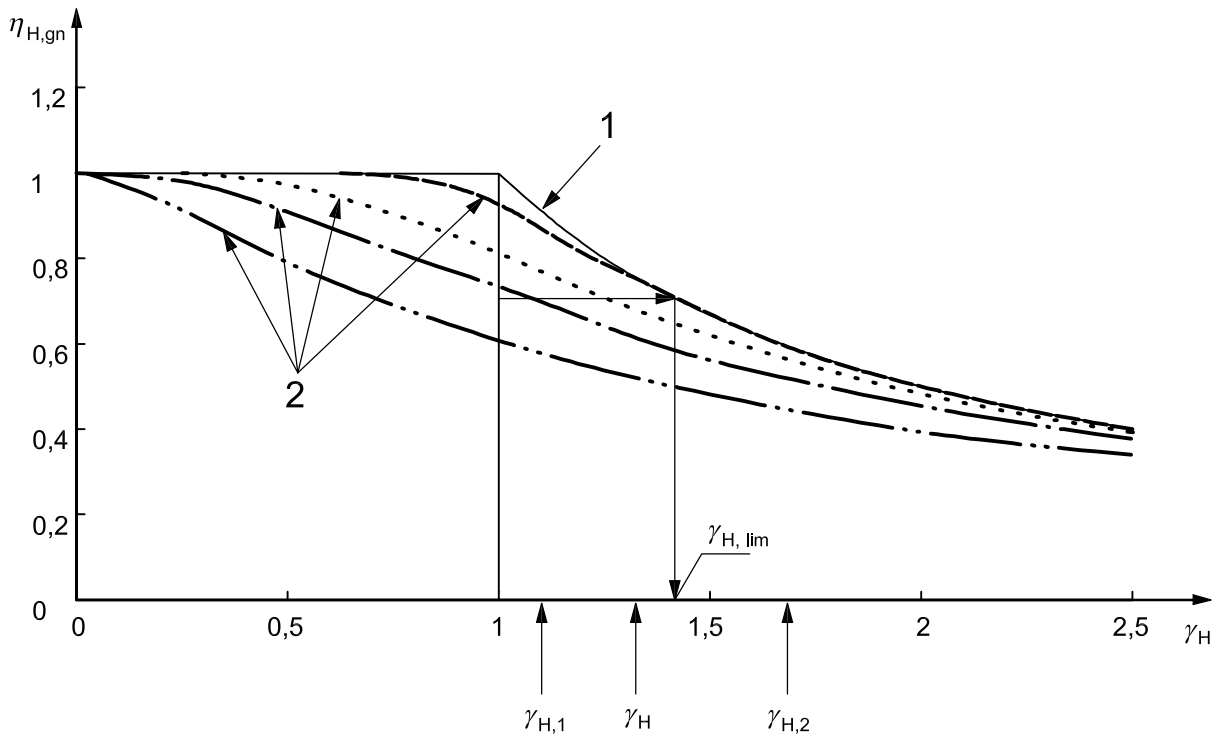

Key

1 ideal curve (high inertia)

2 real inertia, see for example Figure 5 (but not relevant here)

Figure 4 — Illustration of the procedure according to method b to determine the actual length of the heating season (monthly method)

And determine for each month:

— The value of γ_H at the beginning of the month. This value is simply calculated as the mean value of γ_H for the considered month and the previous month (previous month for January is December). The value of γ_H at the end of the month. This value is simply calculated as the mean value of γ_H for the considered month and the next month (next month for December is January). The lowest of the two values is called $\gamma_{H,1}$ the highest is called $\gamma_{H,2}$. Negative values of γ_H shall be replaced by the value from the nearest month with positive value of γ_H.

— If $\gamma_{H,2} < \gamma_{H,lim}$ the whole month is part of the heating period: $f_H = 1$.

— If $\gamma_{H,1} > \gamma_{H,lim}$ the whole month is outside the heating period: $f_H = 0$.

— Otherwise, a fraction of the month is part of the heating period:

  — If $\gamma_H > \gamma_{H,lim}$: $f_H = 0{,}5\ (\gamma_{H,lim} - \gamma_{H,1})/(\gamma_H - \gamma_{H,1})$;

  — If $\gamma_H \leqslant \gamma_{H,lim}$: $f_H = 0{,}5 + 0{,}5\ (\gamma_{H,lim} - \gamma_H)/(\gamma_{H,2} - \gamma_H)$.

© ISO 2008 – All rights reserved
Documents
Document Sharing Hub
Full document details: BS EN ISO 13790:2008

7.4.1.2 Cooling season

In the absence of a national method, the actual length of the cooling season to determine the number of hours of operation of certain season-length-dependent provisions (e.g. pumps, fans, central pre-cooling; see 14.3) can be determined as follows.

The actual length of the cooling season, L_C, expressed in the number of months, is calculated by using Equation (13):

$$L_C = \sum_{m=1}^{m=12} f_{C,m} \tag{13}$$

where $f_{C,m}$ is the fraction of the month m that is part of the cooling season.

Determine f_C for each month according to one of the following two methods:

— method a: simplified method, on the basis of the ratio between the energy need for cooling and heating.

— method b: on the basis of the monthly values for the heat-balance ratio for the cooling mode, γ_C, determined in accordance with 12.2.1.2.

Method a:

The fraction of the month that is part of the cooling season, is calculated by using Equation (14):

$$f_C = Q_{C,nd}/(Q_{H,nd} + Q_{C,nd}) \tag{14}$$

where

$Q_{H,nd}$ is the monthly energy need for heating, expressed in megajoules, determined in accordance with 7.2.1.1;

$Q_{C,nd}$ is the monthly energy need for cooling, expressed in megajoules, determined in accordance with 7.2.1.2.

Method b:

NOTE 1 The procedure is similar to the procedure for the heating mode, but with $1/\gamma_C$ instead of γ_H.

Determine $f_{C,m}$ for each month as follows.

Determine first the limit value of the dimensionless heat-balance ratio for the cooling mode $\gamma_{C,lim}$, by using Equation (15):

$$(1/\gamma_C)_{lim} = (a_C + 1)/a_C \tag{15}$$

where a_C is a dimensionless numerical parameter depending on the time constant of the building, determined in accordance with 12.2.1.2.

NOTE 2 The value for $(1/\gamma_C)_{lim}$ corresponds to the point at the *ideal* loss utilization curve with loss utilization factor equal to the *actual* loss utilization factor at $1/\gamma_C = 1$. A lower curve (less utilization, lower a_C) leads to a higher limit; for the ideal curve the limit is $(1/\gamma_C)_{lim} = 1$: the loss utilization factor = 1 and the monthly heat losses by transmission and ventilation heat transfer are just enough to compensate the monthly heat gains.

© ISO 2008 – All rights reserved

Documents
Document Sharing Hub
Full document details: BS EN ISO 13790:2008

And determine for each month:

— the value of $1/\gamma_C$ at the beginning and end of the month, as the mean value of $1/\gamma_C$ for the considered month and the previous month and the mean value of $1/\gamma_C$ for the considered month and the next month (previous month for January is December; next month for December is January). The lowest of the two values is called $(1/\gamma_C)_1$, the highest is called $(1/\gamma_C)_2$. Negative values of $1/\gamma_C$ shall be replaced by the value from the nearest month with positive value of $1/\gamma_C$.

— If $(1/\gamma_C)_2 < (1/\gamma_C)_{lim}$ the whole month is part of the cooling period: $f_C = 1$.

— If $(1/\gamma_C)_1 > (1/\gamma_C)_{lim}$ the whole month is outside the cooling period: $f_C = 0$.

— Otherwise, a fraction of the month is part of the cooling period:

  — If $(1/\gamma_C) > (1/\gamma_C)_{lim}$: $f_C = 0{,}5\ [(1/\gamma_C)_{lim} - (1/\gamma_C)_1]/[(1/\gamma_C) - (1/\gamma_C)_1]$;

  — If $(1/\gamma_C) \leqslant (1/\gamma_C)_{lim}$: $f_C = 0{,}5 + 0{,}5\ [(1/\gamma_C)_{lim} - (1/\gamma_C)]/[(1/\gamma_C)_2 - (1/\gamma_C)]$.

7.4.2 Seasonal method

The actual length of the heating and cooling season depends on the heat-balance ratio and thermal inertia. These lengths are needed to know the number of operation hours of certain season-length-dependent provisions (e.g. pumps, fans).

A calculation method to determine the actual length of the heating and cooling season may be determined at national level. In the absence of a national method, the fixed length of the heating and cooling season (see Annex I.3) may be used as a conservative number.

7.4.3 Simple hourly method

The length of heating and cooling season is needed to know the number of hours of operation of certain systems with auxiliary energy use (e.g. pumps, fans).

The lengths of the heating and cooling seasons (number of days or hours) are determined by averaging the heating or cooling need over the previous four weeks. The start and end of the heating and cooling seasons is determined with a threshold value of 1 W/m^2 floor area.

The length of cooling season can be reduced by an extra (energy-consuming) provision such as mechanical or natural night-time ventilation or free cooling; consequently, for the operation period of such provision it is necessary to calculate the length of the cooling season without this provision or count the hours of operation of such a provision.

© ISO 2008 – All rights reserved
Documents
Document Sharing Hub
Full document details: BS EN ISO 13790:2008

8 Heat transfer by transmission

8.1 Calculation procedure

The calculation procedure depends on the type of calculation method, but the assumptions (on environment conditions, user behaviour and controls) and the basic physical data shall be the same for each type of calculation method (seasonal, monthly, simple hourly and detailed simulation methods). See Table 4.

Table 4 — Calculation procedure for thermal transmission heat transfer for the different types of methods

Type of method	Total heat transfer by transmission	Transmission heat transfer coefficients	Input data and boundary conditions
Seasonal or monthly method	8.2	8.3	8.4
Simple hourly method	Not applicable	8.3	8.4
Detailed simulation method	Not applicable [a]	Not applicable [a]	8.4
[a] But compliance with steady-state properties is to be demonstrated.			

8.2 Total heat transfer by transmission per building zone

For the monthly and seasonal method, the total heat transfer by transmission, Q_{tr}, expressed in megajoules, is calculated for each month or season and for each zone, z, as given by Equation (16):

For heating: $Q_{tr} = H_{tr,adj}(\theta_{int,set,H} - \theta_e)t$ (16)

For cooling: $Q_{tr} = H_{tr,adj}(\theta_{int,set,C} - \theta_e)t$

where (for each building zone, z, and for each calculation step)

$H_{tr,adj}$ is the overall heat transfer coefficient by transmission of the zone, adjusted for the indoor-outdoor temperature difference (if applicable), determined in accordance with 8.3, expressed in watts per kelvin,

$\theta_{int,set,H}$ is the set-point temperature of the building zone for heating, determined in accordance with Clause 13, expressed in degrees centigrade;

$\theta_{int,set,C}$ is the set-point temperature of the building zone for cooling, determined in accordance with Clause 13, expressed in degrees centigrade;

θ_e is the temperature of the external environment, determined in accordance with Annex F, expressed in degrees centigrade;

t is the duration of the calculation step, determined in accordance with Annex F, expressed in megaseconds.

NOTE The heat transfer or part of the heat transfer can have a negative sign during a certain period.

© ISO 2008 – All rights reserved

Documents
Document Sharing Hub
Full document details: BS EN ISO 13790:2008

8.3 Transmission heat transfer coefficients

8.3.1 General

The value for the overall transmission heat transfer coefficient, $H_{tr,adj}$, expressed in watts per kelvin, shall be calculated in accordance with ISO 13789, using the following equation:

$$H_{tr,adj} = H_D + H_g + H_U + H_A \tag{17}$$

where

H_D is the direct heat transfer coefficient by transmission to the external environment, expressed in watts per kelvin;

H_g is the steady-state heat transfer coefficient by transmission to the ground, expressed in watts per kelvin;

H_U is the transmission heat transfer coefficient by transmission through unconditioned spaces, expressed in watts per kelvin;

H_A is the heat transfer coefficient by transmission to adjacent buildings, expressed in watts per kelvin.

In general, H_x, representing H_D, H_g, H_U, or H_A, consists of three terms (see ISO 13789):

$$H_x = b_{tr,x} \left[\Sigma_i A_i U_i + \Sigma_k l_k \Psi_k + \Sigma_j \chi_j\right] \tag{18}$$

where

A_i is the area of element i of the building envelope, in square metres;

U_i is the thermal transmittance of element i of the building envelope, expressed in watts per square metre kelvin;

l_k is the length of linear thermal bridge k, expressed in metres;

Ψ_k is the linear thermal transmittance of thermal bridge k, expressed in watts per metre kelvin;

χ_j is the point thermal transmittance of point thermal bridge j, expressed in watts per kelvin;

$b_{tr,x}$ is the adjustment factor, with value $b_{tr,x} \neq 1$ if the temperature at the other side of the construction element is not equal to the external environment, such as in the case of a partition to adjacent conditioned or unconditioned spaces or as in the case of a ground floor; the value shall be determined in accordance with 8.3.2;

NOTE The adjustment factor, b, adjusts the coefficient instead of the temperature difference.

and where the summation is done over all the building components separating the internal environment and the environment at the other side of the construction (external, ground, unconditioned space or adjacent conditioned space).

In case of more than one type of ground floor, or more than one adjacent unconditioned or conditioned space, the values for the transmission heat transfer coefficients are summated, using for each element the corresponding value for the adjustment factor, $b_{tr,x}$.

In the case of thermally coupled zones, calculated in accordance with 6.3.3.3, the heat transmission coefficient of the partition between the zones is calculated separately, as explained, for example, in 10.2.1 and 11.2.1.

© ISO 2008 – All rights reserved
Documents
Document Sharing Hub
Full document details: BS EN ISO 13790:2008

In the application of ISO 13789, the specific procedures of 8.3.2 shall be followed.

8.3.2 Specific procedures

8.3.2.1 Heat transmission through windows and doors or curtain walls

8.3.2.1.1 General

The values for the heat transmission coefficient, $H_{tr,k}$, of windows and doors or curtain walls are determined in accordance with the relevant standard on thermal transmission of windows and doors or curtain walls as specified in Annex A.

For each window the frame area fraction shall be determined in accordance with ISO 10077-1.

As an alternative, it may be nationally decided to use a fixed frame area fraction for all windows in the building.

NOTE For instance, in the case of heating-dominated climates, use 0,20 or 0,30, whichever leads to the highest U-value of the window (see 8.3.1) or a fixed value of 0,30. For cooling-dominated climates use a fixed value of 0,20.

8.3.2.1.2 Simple hourly method

For the simple hourly method a distinction is needed between transmission through lightweight building elements (windows, doors, curtain walls, other glazed elements), and through heavyweight building elements.

8.3.2.2 Effect of nocturnal insulation

8.3.2.2.1 Seasonal or monthly method

When shutters are present, the values for the heat transmission coefficient, $H_{tr,k}$, of the window concerned within element k may be reduced by applying the following reduced thermal transmittance of window and shutter, $U_{w,corr}$, expressed in watts per square metre kelvin, as given by Equation (19):

$$U_{w,corr} = U_{w+shut}\, f_{shut} + U_w \left(1 - f_{shut}\right) \tag{19}$$

where

U_{w+shut} is the thermal transmittance of window and shutter together, expressed in watts per square metre kelvin;

f_{shut} is the dimensionless fraction of accumulated temperature difference for period with shutter closed;

U_w is the thermal transmittance of window without shutter, expressed in watts per square metre kelvin.

NOTE An example of the calculation of f_{shut} is given in Annex G.

8.3.2.2.2 Simple hourly method

For the simple hourly method the appropriate U-value is chosen on hourly basis.

© ISO 2008 – All rights reserved

Documents
Document Sharing Hub
Full document details: BS EN ISO 13790:2008

8.3.2.3 Heat transmission to the ground

The appropriate temperature difference compared to heat transmission to the external environment, due to the large inertia of the ground (annual cycle), is taken into account in ISO 13789 by an adjustment factor, $b_{tr,x}$, that adjusts the heat transfer coefficient instead of the temperature difference.

The value for the adjustment factor, $b_{tr,x}$, is different per month. This also applies to the simple hourly method.

Alternatively, it may be decided at national level to allow seasonal values for the adjustment factor, $b_{tr,x}$, which are different for the heating and cooling period.

NOTE 1 In this context ISO 13789 requires, as input, the value of the set-point for the internal temperature for heating, $\theta_{int,set,H}$, and for cooling, $\theta_{int,set,C}$, respectively.

NOTE 2 There is a monthly variation in the coefficient for heat transmission to the ground because it includes a correction for the periodic heat flow through the ground (annual cycle). See ISO 13370:2007, Clause A.7.

8.3.2.4 Heat transmission to adjacent unconditioned space

The reduced temperature difference compared to heat transmission to the external environment is taken into account in ISO 13789 by an adjustment factor, $b_{tr,x}$, that reduces the heat transfer coefficient instead of the temperature difference.

Default values for the adjustment factor, $b_{tr,x}$, may be defined at national level, depending on the type of building and/or application.

NOTE National default values can, for instance, be defined in the case of assessment of old existing buildings, if gathering the full required input would be too labour-intensive for the purpose, relative to the cost-effectiveness of gathering the input.

8.3.2.5 Heat transmission to adjacent sunspace (greenhouse)

For the heat transmission the same procedure in ISO 13789 is followed as for an adjacent unconditioned space.

However, if the simplified procedure given in E.2.4 is applied, the adjustment factor, $b_{tr,x}$, includes the combined effect of heat transmission and solar radiation, which is in line with the general procedure given in Annex A of ISO 13789:2007.

NOTE 1 Otherwise, the effect of solar radiation on the temperature of the attached sunspace is taken into account as part of the calculation of the solar heat gains (Clause 11; see also E.2.3)

NOTE 2 E.2.4 provides the conditions and specifications for the simplified procedures.

8.3.2.6 Heat transmission to adjacent buildings

The appropriate temperature difference compared to heat transmission to the external environment is taken into account in ISO 13789 by an adjustment factor, $b_{tr,x}$, that adjusts the heat transfer coefficient instead of the temperature difference.

NOTE 1 See ISO 13789 for inclusion of this element. In this context, ISO 13789 requires, as input, the value of the set-point for the internal temperature for heating, $\theta_{int,set,H}$, and for cooling, $\theta_{int,set,C}$.

It may be determined at national level if, depending on the purpose of the calculation, this element in the heat transmission may or shall be ignored.

NOTE 2 For instance, because of legal restrictions forbidding the characteristics of other buildings (which can be subject to change in the course of time) to have an influence on whether the legally required minimum energy performance level is maintained.

© ISO 2008 – All rights reserved
Documents
Document Sharing Hub
Full document details: BS EN ISO 13790:2008

8.3.2.7 Multi-zone calculation with uncoupled versus coupled zones

For multi-zone calculation with thermally uncoupled zones, heat transmission to other conditioned zones is not applicable.

For multi-zone calculation with thermally coupled zones, heat transmission to adjacent conditioned zone(s) is calculated by using for the temperature, $\theta_{e,k}$, the value for the temperature of the adjacent zone k, determined in accordance with Annex B.

NOTE For this situation the adapted temperature difference compared to heat transmission to the external environment is not taken into account by a reduction factor b, but by using directly an adapted temperature difference.

8.3.2.8 Thermal bridges

The heat transfer by transmission includes area-related heat loss by transmission as well as linear and point thermal bridges. The heat transmission by thermal bridges is taken into account in ISO 13789 as part of H_{tr}.

8.3.2.9 Heating and cooling mode

In the case of different properties for the heating and cooling mode, separate H_{tr} values shall be used for each mode. This is, for instance, applicable in the case of windows with movable shutters or different summer and winter modes, ground floor heat transfer and heat transfer to an attached sunspace (greenhouse).

8.3.2.10 Special elements

See 8.4.2 for specific details for special elements.

8.4 Input data and boundary conditions

8.4.1 General principles

8.4.1.1 Seasonal, monthly and simple hourly methods

Except for specific cases (see below), the physical characteristics that are required as input are already obtained as part of the procedure in 8.3.

8.4.1.2 Detailed simulation methods

For detailed dynamic simulations methods, the input data on heat transmission elements are in general more detailed than for the seasonal, monthly or simple hourly methods. However, the basic physical data and the assumptions (on relevant environment conditions, user behaviour and controls) shall be in accordance with 8.3. Consequently, it shall be verified that the monthly values of the overall transmission heat transfer used in the dynamic simulation method are the same as the overall transmission heat transfer for the other methods which are determined on the basis of 8.3.

In this respect, specific attention is required for:

— thermal bridges: the same thermal bridge effects as prescribed for the other methods in 8.3 shall be taken into account;

— heat transmission coefficient to the ground: the procedure given in ISO 13370:2007, Annex D, shall be applied to calculate the dynamic heat transfer by transmission through the ground floor. This calculation involves a virtual layer below the floor construction and a (monthly varying) temperature below that virtual layer as boundary condition.

© ISO 2008 – All rights reserved

Documents
Document Sharing Hub
Full document details: BS EN ISO 13790:2008

8.4.1.3 All methods

In the case of old existing buildings, if gathering the full required input would be too labour-intensive for the purpose, relative to the cost-effectiveness of gathering the input, simplified methods or input may be used. Specification of the conditions for allowing this simple method or input may be made at national level, depending on the purpose of the calculation. In that case the user shall report which method or input has been used and from which source. Examples are given in Annex G.

8.4.2 Special elements

Special methods are needed to calculate the influence of special elements:

— **Ventilated solar walls**: see Annex E.

— **Other ventilated envelope elements**: see Annex E.

— **Internal heat sources with a heat flow that is a predominant function of the internal temperature**: If a heat source of a potentially significant magnitude is a predominant function of the internal temperature, e.g. a source temperature that is close to the internal temperature (such as a water tank maintained at a specified temperature), the amount of heat transferred is strongly dependent on the temperature difference between source and internal environment. In that case, the source shall not be added to the internal heat gains, but the heat transfer shall be added to the heat transfer by transmission, determined in this clause. The temperature, $\theta_{e,k}$, is the value for the temperature of the source and the value for the heat transmission coefficient, $H_{tr,k}$, of the element is the product of the exposed source area, in square metres, and the heat transfer coefficient in watts per metres squared kelvin.

9 Heat transfer by ventilation

9.1 Calculation procedure

The calculation procedure depends on the type of calculation method, but the assumptions (on environment conditions, user behaviour and controls) and the basic physical data shall be the same for each type of calculation method (seasonal, monthly, simple hourly and detailed simulation methods). See Table 5.

Table 5 — Calculation procedure for ventilation heat transfer for the different types of methods

Type of method	Total heat transfer by ventilation	Ventilation heat transfer coefficients	Input data and boundary conditions
Seasonal or monthly method	9.2	9.3	9.4
Simple hourly method	Not applicable	9.3	9.4
Detailed simulation method	Not applicable [a]	Not applicable [a]	9.4

[a] But compliance with steady-state properties is to be demonstrated.

9.2 Total heat transfer by ventilation per building zone — Seasonal or monthly method

For the monthly and seasonal method, the total heat transfer by ventilation, Q_{ve}, expressed in megajoules, is calculated for each month or season and for each zone, z, as given by Equation (20):

For heating: $Q_{ve} = H_{ve,adj}(\theta_{int,set,H,z} - \theta_e)t$ (20)

For cooling: $Q_{ve} = H_{ve,adj}(\theta_{int,set,C,z} - \theta_e)t$

© ISO 2008 – All rights reserved
Documents
Document Sharing Hub
Full document details: BS EN ISO 13790:2008

where (for each building zone, z, and for each calculation step)

$H_{ve,adj}$ is the overall heat transfer coefficient by ventilation, adjusted for the indoor-outdoor temperature difference (if applicable), determined in accordance with 9.3, expressed in watts per kelvin;

$\theta_{int,H,set}$ is the set-point temperature of the building zone for heating, determined in accordance with Clause 13, expressed in degrees centigrade;

$\theta_{int,C,set}$ is the set-point temperature of the building zone for cooling, determined in accordance with Clause 13, expressed in degrees centigrade;

θ_e is the temperature of the external environment, determined in accordance with Annex F, expressed in degrees centigrade;

t is the duration of the calculation step, determined in accordance with Annex F, expressed in megaseconds.

NOTE The heat transfer or part of the heat transfer can have a negative sign during a certain period, in which case heat is added to the building (zone).

9.3 Ventilation heat transfer coefficients

9.3.1 General

The value for the overall ventilation heat transfer coefficient, $H_{ve,adj}$, expressed in watts per kelvin, is calculated as given by Equation (21):

$$H_{ve,adj} = \rho_a c_a \left(\Sigma_k b_{ve,k} q_{ve,k,mn}\right) \tag{21}$$

where

$\rho_a c_a$ is the heat capacity of air per volume, expressed in joules per cubic metres per kelvin = 1 200 J/(m^3·K);

$q_{ve,k,mn}$ is the time-average airflow rate of air flow element k, expressed in cubic metres per second;

$b_{ve,k}$ is the temperature adjustment factor for air flow element k, with value $b_{ve,k} \neq 1$ if the supply temperature, $\theta_{sup,k}$, is not equal to the temperature of the external environment, such as in the case of pre-heating, pre-cooling or heat recovery; the value shall be determined in accordance with 9.3.3;

NOTE 1 The temperature adjustment factor, b, adjusts the coefficient instead of the temperature difference.

k represents each of the relevant air flow elements, such as air infiltration, natural ventilation, mechanical ventilation and/or extra ventilation for night-time cooling.

The time-average airflow rate of air flow element k, $q_{ve,k,mn}$, expressed in cubic metres per second, is calculated by using Equation (22):

$$q_{ve,k,mn} = f_{ve,t,k}\, q_{ve,k} \tag{22}$$

where

$q_{ve,k}$ is the airflow rate of air flow element k, determined in accordance with the relevant standard as specified in Annex A, expressed in cubic metres per second;

$f_{ve,t,k}$ is the time fraction of operation of the air flow element k, calculated as the fraction of the number of hours per day (full time: $f_{ve,t,k} = 1$), determined from the same source as $q_{ve,k}$.

AVA Documents
Document Sharing Hub

© ISO 2008 – All rights reserved

Full document details: BS EN ISO 13790:2008

NOTE 2 For monthly or seasonal methods: in the case of intermittent heating or cooling where, following 13.2.2, the effect of intermittency is taken into account by a reduction factor on the energy need for heating or cooling, the time fraction is calculated assuming continuous heating or cooling, thus disregarding days with reduced heating or cooling set-point or switch-off.

In the application of the relevant standards specified in Annex A, the specific procedures of 9.3.3 shall be followed.

9.3.2 Simple hourly method

If the zone receives air flows from different sources (for example from external environment and from the ventilation system) and H_{ve} is, at each hour, calculated in accordance with Equation (21), the supply temperature adjustment is already taken into account in H_{ve} in which case $H_{ve} = H_{ve,adj}$ and $\theta_{sup} = \theta_e$.

9.3.3 Specific procedures

9.3.3.1 Heating and cooling mode

In the case of different properties for the heating and cooling mode, separate input values shall be used. This is applicable for instance in the case of different summer and winter ventilation rates, heat recovery units and heat transfer to an attached sunspace (greenhouse).

9.3.3.2 Climate data

The values obtained from the relevant standards on the amount of air flow and on ventilation systems in accordance with Annex A shall be based upon the same climate as used for the calculation in this International Standard and specified in Annex F.

9.3.3.3 Ventilation including air infiltration from the exterior

The supply temperature, $\theta_{sup,k}$, is the value of the temperature of the external environment, θ_e, in accordance with Annex F. Consequently, the temperature adjustment factor, $b_{ve,k}$, for air flow from the exterior environment is equal to:

$$b_{ve,k} = 1 \tag{23}$$

9.3.3.4 Ventilation including air infiltration from adjacent unconditioned space

The supply temperature, $\theta_{sup,k}$, is the value of the temperature of the external environment, θ_e, in accordance with Annex F. Consequently, the temperature adjustment factor, $b_{ve,k}$, for air flow from adjacent unconditioned spaces is equal to:

$$b_{ve,k} = 1 \tag{23}$$

NOTE This is a simplification.

9.3.3.5 Ventilation from adjacent sunspace (greenhouse)

The supply temperature, $\theta_{sup,k}$, is the value of the temperature of the external environment, θ_e, in accordance with Annex F. Consequently, the temperature adjustment factor, $b_{ve,k}$, for air flow from adjacent unconditioned spaces is equal to:

$$b_{ve,k} = 1 \tag{23}$$

If it can be demonstrated that during the heating season the air flow element enters the conditioned zone via the adjacent sunspace, it is permissible to use for the temperature adjustment factor:

$$b_{ve,k} = b_{tr,x} \tag{24}$$

where $b_{tr,x}$ is the temperature adjustment factor applied in 8.3 for heat transmission to the adjacent sunspace.

© ISO 2008 – All rights reserved
Documents
Document Sharing Hub
Full document details: BS EN ISO 13790:2008

The temperature adjustment factor can be converted to a number expressing the efficiency of heat recovery via the sunspace, $\eta_{ve,k}$, using the following equation:

$$\eta_{ve,k} = (1 - b_{ve,k}) \tag{25}$$

This can be useful for instance in case of combination with a heat recovery unit (see 9.3.3.8)

NOTE 1 If the simplified method in E.2.4 is used, $b_{tr,x}$ includes the positive effect of solar radiation on the temperature of the attached sunspace. If the full method in E.2 is used, it does not.

NOTE 2 Usually the value for $b_{ve,k}$ is different for heating and cooling seasons, or monthly.

9.3.3.6 Ventilation including air infiltration from adjacent buildings

If applicable, the supply temperature, $\theta_{sup,k}$, is the value of the temperature of the adjacent building that may be determined at national level, depending on the application.

Consequently, the temperature adjustment factor, $b_{ve,k}$, for air flow from adjacent buildings is equal to:

$$b_{ve,k} = \frac{\left(\theta_{int,set} - \theta_{sup,k}\right)}{\left(\theta_{int,set} - \theta_{e}\right)} \tag{26}$$

where

$\theta_{int,set}$ is the set-point temperature of the building zone for heating or cooling, determined in accordance with Clause 13, expressed in degrees centigrade;

$\theta_{sup,k}$ is the supply temperature, equal to the internal temperature of the adjacent building, expressed in degrees centigrade;

θ_{e} is the temperature of the external environment, determined in accordance with Annex F, expressed in degrees centigrade.

It may be determined at national level if, depending on the purpose of the calculation, this element in the ventilation heat transfer may or shall be ignored. In that case the temperature adjustment factor $b_{ve,k} = 0$. If not ignored, the value of the internal temperature of the adjacent building may be determined at national level.

NOTE Normally, this term is probably (assumed to be) zero. But it can, for instance, be relevant in the case of comparison with measured energy where infiltration or ventilation from adjacent buildings plays a role.

9.3.3.7 Multi-zone calculation with uncoupled versus coupled zones

For multi-zone calculation with thermally uncoupled zones, heat transfer by infiltration or ventilation from other conditioned zones is not applicable.

For multi-zone calculation with thermally coupled zones: the supply temperature, $\theta_{sup,k}$, of the ventilation, including air infiltration from adjacent conditioned zone(s), is the value of the temperature of the adjacent zone, calculated in accordance with Annex B.

9.3.3.8 Heat recovery unit

A heat recovery unit, if present, is usually an important element in the heat balance of the building zone, strongly influencing the utilization of heat gains and free heating or cooling potential. For that reason the effect of the use of heat recovery units shall be taken into account in the calculation of the energy needs for heating and cooling and cannot be dealt with via a separately determined correction factor.

NOTE See 7.3 on the optional extra (informative) calculation to isolate the energy needs for heating and cooling without heat recovery.

Documents
Document Sharing Hub

© ISO 2008 – All rights reserved

Full document details: BS EN ISO 13790:2008

The temperature adjustment factor, $b_{ve,k}$, for air flow from a heat recovery unit is equal to:

$$b_{ve,k} = (1 - f_{ve,frac,k} \times \eta_{hru}) \tag{27}$$

where

η_{hru} is the efficiency of the heat recovery unit, obtained from the relevant standard on ventilation systems as specified in Annex A, taking into account representative conditions which may be determined at national level;

$f_{ve,frac,k}$ is the fraction of the considered air flow element k that goes through the heat recovery unit.

If the relevant standard on ventilation systems specified in Annex A provides the supply temperature $\theta_{sup,k}$, instead of the efficiency of the heat recovery unit, the efficiency, η_{hru}, is obtained by the following conversion:

$$\eta_{hru} = \frac{\left(\theta_{sup,k} - \theta_e\right)}{\left(\theta_{int,set} - \theta_e\right)} \tag{28}$$

where

$\theta_{sup,k}$ is the supply temperature from the heat recovery unit, expressed in degrees centigrade, obtained from the relevant standard on ventilation systems specified in Annex A, taking into account representative conditions which may be determined at national level;

$\theta_{int,set}$ is the set-point temperature of the building zone for heating or cooling, determined in accordance with Clause 13, expressed in degrees centigrade;

$\theta_{sup,k}$ is the supply temperature, equal to the internal temperature of the adjacent building, expressed in degrees centigrade.

In the application of the relevant standards specified in Annex A, the following shall be taken into account.

— **General**

If the heat recovery unit is switched off or if the heat exchanger is bypassed to prevent the risk of freezing of the unit, this shall be properly accounted for in the supplied data. If applicable, the data on additional sources of ventilation air shall be provided, such as infiltration and natural ventilation, to avoid an overestimation of the performance of the heat recovery unit and/or underestimation of the total amount of ventilation flow rate to the building or building zone.

NOTE Usually the effect will be different for the heating and cooling season.

— **Climate data**

The values obtained from the relevant standards on the efficiency of the heat recovery unit and the values for the supply temperature, $\theta_{sup,k}$, and for the additional energy (for fan power, defrost, etc.) shall be based upon the same climate as used for the calculation in this International Standard, as specified in Annex F.

— **Auxiliary energy use**

Additional energy, e.g. for defrosting and energy needed to power the fan, shall be added separately, see 14.3.3.

© ISO 2008 – All rights reserved
Documents
Document Sharing Hub
Full document details: BS EN ISO 13790:2008