BS EN ISO 14122-3:2016

BSI Standards Publication

Safety of machinery — Permanent means of access to machinery

Part 3: Stairs, stepladders and guard-rails (ISO 14122-3:2016)

Documents
Document Sharing Hub

Full document details: BS EN ISO 14122-3:2016

National foreword

This British Standard is the UK implementation of EN ISO 14122-3:2016. It supersedes BS EN ISO 14122-3:2001+A1:2010 which is withdrawn.

The UK participation in its preparation was entrusted to Technical Committee B/208/1, Stairs and walkways - Industrial stairs.

A list of organizations represented on this committee can be obtained on request to its secretary.

This publication does not purport to include all the necessary provisions of a contract. Users are responsible for its correct application.

© The British Standards Institution 2016.
Published by BSI Standards Limited 2016

ISBN 978 0 580 84645 8

ICS 13.110

Compliance with a British Standard cannot confer immunity from legal obligations.

This British Standard was published under the authority of the Standards Policy and Strategy Committee on 30 June 2016.

Amendments/corrigenda issued since publication

Date	Text affected

Documents
Document Sharing Hub

Full document details: BS EN ISO 14122-3:2016

EUROPEAN STANDARD

NORME EUROPÉENNE

EUROPÄISCHE NORM

EN ISO 14122-3

June 2016

ICS 13.110

Supersedes EN ISO 14122-3:2001

English Version

Safety of machinery - Permanent means of access to machinery - Part 3: Stairs, stepladders and guard-rails (ISO 14122-3:2016)

Sécurité des machines - Moyens d'accès permanents aux machines - Partie 3: Escaliers, échelles à marches et garde-corps (ISO 14122-3:2016)

Sicherheit von Maschinen - Ortsfeste Zugänge zu maschinellen Anlagen - Teil 3: Treppen, Treppenleitern und Geländer (ISO 14122-3:2016)

This European Standard was approved by CEN on 29 April 2016.

CEN members are bound to comply with the CEN/CENELEC Internal Regulations which stipulate the conditions for giving this European Standard the status of a national standard without any alteration. Up-to-date lists and bibliographical references concerning such national standards may be obtained on application to the CEN-CENELEC Management Centre or to any CEN member.

This European Standard exists in three official versions (English, French, German). A version in any other language made by translation under the responsibility of a CEN member into its own language and notified to the CEN-CENELEC Management Centre has the same status as the official versions.

CEN members are the national standards bodies of Austria, Belgium, Bulgaria, Croatia, Cyprus, Czech Republic, Denmark, Estonia, Finland, Former Yugoslav Republic of Macedonia, France, Germany, Greece, Hungary, Iceland, Ireland, Italy, Latvia, Lithuania, Luxembourg, Malta, Netherlands, Norway, Poland, Portugal, Romania, Slovakia, Slovenia, Spain, Sweden, Switzerland, Turkey and United Kingdom.

EUROPEAN COMMITTEE FOR STANDARDIZATION
COMITÉ EUROPÉEN DE NORMALISATION
EUROPÄISCHES KOMITEE FÜR NORMUNG

CEN-CENELEC Management Centre: Avenue Marnix 17, B-1000 Brussels

© 2016 CEN All rights of exploitation in any form and by any means reserved worldwide for CEN national Members.

Ref. No. EN ISO 14122-3:2016 E

Documents
Document Sharing Hub

Full document details: BS EN ISO 14122-3:2016

European foreword

This document (EN ISO 14122-3:2016) has been prepared by Technical Committee ISO/TC 199 "Safety of machinery" in collaboration with Technical Committee CEN/TC 114 "Safety of machinery" the secretariat of which is held by DIN.

This European Standard shall be given the status of a national standard, either by publication of an identical text or by endorsement, at the latest by December 2016, and conflicting national standards shall be withdrawn at the latest by December 2016.

Attention is drawn to the possibility that some of the elements of this document may be the subject of patent rights. CEN [and/or CENELEC] shall not be held responsible for identifying any or all such patent rights.

This document supersedes EN ISO 14122-3:2001.

This document has been prepared under a mandate given to CEN by the European Commission and the European Free Trade Association, and supports essential requirements of EU Directive(s).

For relationship with EU Directive(s), see informative Annex ZA, which is an integral part of this document.

According to the CEN-CENELEC Internal Regulations, the national standards organizations of the following countries are bound to implement this European Standard: Austria, Belgium, Bulgaria, Croatia, Cyprus, Czech Republic, Denmark, Estonia, Finland, Former Yugoslav Republic of Macedonia, France, Germany, Greece, Hungary, Iceland, Ireland, Italy, Latvia, Lithuania, Luxembourg, Malta, Netherlands, Norway, Poland, Portugal, Romania, Slovakia, Slovenia, Spain, Sweden, Switzerland, Turkey and the United Kingdom.

Endorsement notice

The text of ISO 14122-3:2016 has been approved by CEN as EN ISO 14122-3:2016 without any modification.

Documents
Document Sharing Hub
Full document details: BS EN ISO 14122-3:2016

Annex ZA
(informative)

Relationship between this European Standard and the essential requirements of Directive 2006/42/EC machinery, and amending Directive 95/16/EC (recast) [2006 L157] aimed to be covered

This European Standard has been prepared under a Commission's standardization request M/396 to provide one voluntary means of conforming to essential requirements of Directive 2006/42/EC of the European Parliament and of the Council of 17 May 2006 on machinery, and amending Directive 95/16/EC (recast) [2006 L157].

Once this standard is cited in the Official Journal of the European Union under that Directive, compliance with the normative clauses of this standard given in Table ZA.1 confers, within the limits of the scope of this standard, a presumption of conformity with the corresponding essential requirements of that Directive, and associated EFTA regulations.

Table ZA.1 — Correspondence between this European Standard and Directive 2006/42/EC [2006 L157]

Essential Requirements of Directive 2006/42/EC	Clause(s) / subclause(s) of this EN	Remarks / Notes
1.5.15 "Risks of slipping, tripping or falling"	All	
1.6.2 "Access to operating position and service points"	All	

WARNING 1 — Presumption of conformity stays valid only as long as a reference to this European Standard is maintained in the list published in the Official Journal of the European Union. Users of this standard should consult frequently the latest list published in the Official Journal of the European Union.

WARNING 2 — Other Union legislation may be applicable to the product(s) falling within the scope of this standard.

IMPORTANT: Compliance with the requirements of EN ISO 14122-1 and a relevant access-specific part of EN ISO 14122 is necessary to achieve presumption of conformity.

Documents
Document Sharing Hub
Full document details: BS EN ISO 14122-3:2016

Contents

Page

Foreword ..... **iv**

Introduction ..... **v**

1 Scope **1**

2 Normative references **1**

3 Terms and definitions **1**

4 General requirements **6**
4.1 Construction and materials 6
4.2 Design and construction for the structure and the steps 6

5 Specific requirements applicable to stairs **6**

6 Specific requirements applicable to step ladders **7**

7 Specific requirements applicable to guard-rails **9**
7.1 Guard-rails for platforms, walkways and stair landings 9
7.2 Guard-rails and handrails for stairs and handrails for step ladders 11
7.3 Additional fall-protection when steps, stairs or ladders are near guard-rails of working platforms 13
7.4 Gates 13

8 Verification of safety requirements **14**
8.1 General 14
8.2 Testing of guard-rails 14
8.2.2 Testing procedure 16
8.3 Testing of steps of a stair 17
8.4 Testing of stepladders 19

Annex A (informative) **Significant technical changes between this part of ISO 14122 and the previous edition** **20**

Bibliography **22**

© ISO 2016 – All rights reserved

Documents
Document Sharing Hub
Full document details: BS EN ISO 14122-3:2016

Foreword

ISO (the International Organization for Standardization) is a worldwide federation of national standards bodies (ISO member bodies). The work of preparing International Standards is normally carried out through ISO technical committees. Each member body interested in a subject for which a technical committee has been established has the right to be represented on that committee. International organizations, governmental and non-governmental, in liaison with ISO, also take part in the work. ISO collaborates closely with the International Electrotechnical Commission (IEC) on all matters of electrotechnical standardization.

The procedures used to develop this document and those intended for its further maintenance are described in the ISO/IEC Directives, Part 1. In particular the different approval criteria needed for the different types of ISO documents should be noted. This document was drafted in accordance with the editorial rules of the ISO/IEC Directives, Part 2 (see www.iso.org/directives).

Attention is drawn to the possibility that some of the elements of this document may be the subject of patent rights. ISO shall not be held responsible for identifying any or all such patent rights. Details of any patent rights identified during the development of the document will be in the Introduction and/or on the ISO list of patent declarations received (see www.iso.org/patents).

Any trade name used in this document is information given for the convenience of users and does not constitute an endorsement.

For an explanation on the meaning of ISO specific terms and expressions related to conformity assessment, as well as information about ISO's adherence to the WTO principles in the Technical Barriers to Trade (TBT), see the following URL: Foreword — Supplementary information.

The committee responsible for this document is ISO/TC 199, *Safety of machinery*.

This second edition cancels and replaces the first edition (ISO 14122-3:2001) which has been technically revised. It also incorporates the Amendment ISO 14122-3:2001/Amd 1:2010.

ISO 14122 consists of the following parts, under the general title *Safety of machinery — Permanent means of access to machinery*:

— *Part 1: Choice of fixed means and general requirements of access*

— *Part 2: Working platforms and walkways*

— *Part 3: Stairs, stepladders and guard-rails*

— *Part 4: Fixed ladders*

An additional part, dealing with mobile machinery, is under preparation.

© ISO 2016 – All rights reserved
Documents
Document Sharing Hub
Full document details: BS EN ISO 14122-3:2016

Introduction

This International Standard is a type-B standard as stated in ISO 12100. It is relevant, in particular, for the following stakeholder groups representing the market players with regard to machinery safety:

— machine manufacturers (small, medium and large enterprises);

— health and safety bodies (regulators, accident prevention organizations, market surveillance, etc.).

Others can be affected by the level of machinery safety achieved with the means of this International Standard by the above-mentioned stakeholder groups:

— machine users/employers (small, medium and large enterprises);

— machine users/employees (e.g. trade unions, organizations for peoples with special needs);

— service providers, e.g. for maintenance (small, medium and large enterprises);

— consumers (in case of machinery intended for use by consumers).

The above-mentioned stakeholder groups have been given the possibility to participate at the drafting process of this International Standard.

In addition, this International Standard is intended for standardization bodies elaborating type-C standards. The requirements of this International Standard can be supplemented or modified by a type-C standard.

For machines which are covered by the scope of a type-C standard and which have been designed and built according to the requirements of that standard, the requirements of that type-C standard take precedence.

The purpose of this International Standard is to define the general requirements for safe access to machines. ISO 14122-1 gives guidance about the correct choice of access means when the necessary access to the machine is not possible directly from the ground level or from a floor or platform.

The dimensions specified are consistent with established ergonomic data given in ISO 15534-3.

© ISO 2016 – All rights reserved

Documents
Document Sharing Hub
Full document details: BS EN ISO 14122-3:2016

Documents
Document Sharing Hub

INTERNATIONAL STANDARD ISO 14122-3:2016(E)

Safety of machinery — Permanent means of access to machinery —

Part 3: Stairs, stepladders and guard-rails

1 Scope

This part of ISO 14122 gives requirements for non-powered stairs, stepladders and guard-rails which are a part of a stationary machine, and to the non-powered adjustable parts (e.g. foldable, slidable) and movable parts of those fixed means of access.

NOTE 1 "Fixed" means of access are those mounted in such a manner (for example, by screws, nuts, welding) that they can only be removed by the use of tools.

This part of ISO 14122 specifies minimum requirements that also apply when the same means of access is required as the part of the building or civil construction (e.g. stairs, stepladders, guard-rails) where the machine is installed, on condition that the main function of that part of the construction is to provide a means of access to the machine.

NOTE 2 Where no local regulation or standards exists, this part of ISO 14122 may be used also for means of access which are outside the scope of the standard.

It is intended that this part of ISO 14122 be used with ISO 14122-1 to give the requirements for steps, stepladders and guard-rails.

The ISO 14122 series as a whole is applicable to both stationary and mobile machinery where fixed means of access are necessary. It is not applicable to powered means of access such as lifts, escalators, or other devices specially designed to lift persons between two levels.

This part of ISO 14122 is not applicable to machinery manufactured before the date of its publication.

2 Normative references

The following documents, in whole or in part, are normatively referenced in this document and are indispensable for its application. For dated references, only the edition cited applies. For undated references, the latest edition of the referenced document (including any amendments) applies.

ISO 12100, *Safety of machinery — General principles for design — Risk assessment and risk reduction*

ISO 14122-1:2016, *Safety of machinery — Permanent means of access to machinery — Part 1: Choice of fixed means and general requirements of access*

3 Terms and definitions

For the purposes of this document, the terms and definitions given in ISO 12100, ISO 14122-1 and the following apply.

© ISO 2016 – All rights reserved

Documents
Document Sharing Hub
Full document details: BS EN ISO 14122-3:2016

3.1
stairs
step ladders
succession of horizontal levels — *steps* (3.1.11) and *landings* (3.1.5) — allowing passage on foot from one level to another

Note 1 to entry: Stairs/step ladders are composed of the elements shown in Figure 1 and defined in 3.1.1 to 3.1.16.

Note 2 to entry: For details on the *angle of pitch* (3.1.9) for stairs/step ladders, see ISO 14122-1:2016, 3.2 and 3.3.

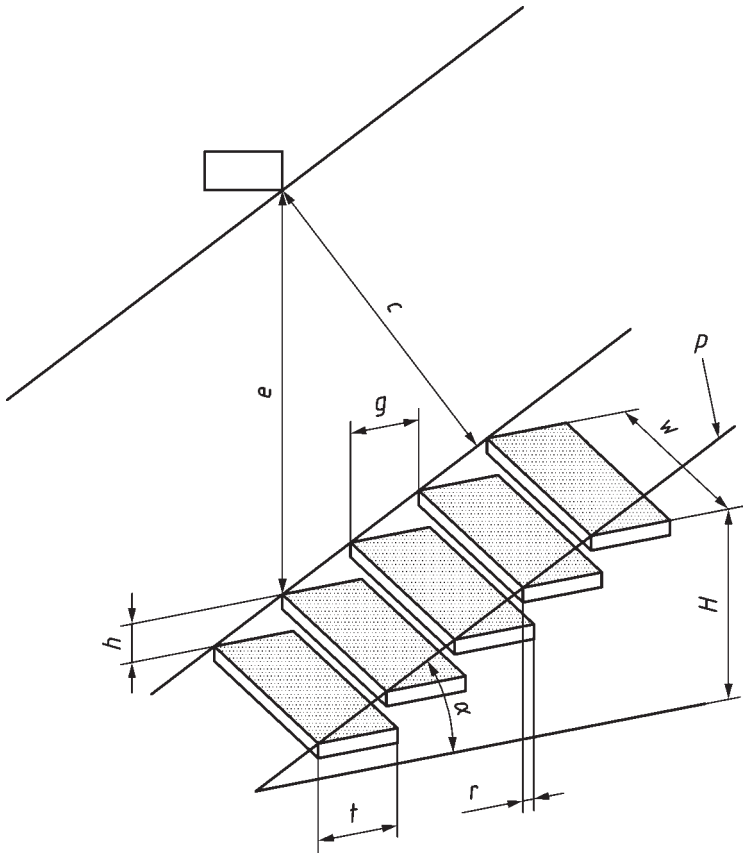

Key

H	climbing height	α	angle of pitch
g	going	*w*	width
e	head-height	*p*	pitch line
h	rise	*t*	depth of step
r	overlap	*c*	clearance

Figure 1 — Parts of stairs

3.1.1
climbing height
vertical distance between the reference level and the *landing* (3.1.5)

Note 1 to entry: See *H* in Figure 1.

3.1.2
flight
uninterrupted sequence of *steps* (3.1.11) between two *landings* (3.1.5)

© ISO 2016 – All rights reserved
Documents
Document Sharing Hub
Full document details: BS EN ISO 14122-3:2016