BS EN ISO 14126:2023

BSI Standards Publication

Fibre-reinforced plastic composites — Determination of compressive properties in the in-plane direction

Documents
Document Sharing Hub

Full document details: BS EN ISO 14126:2023

National foreword

This British Standard is the UK implementation of EN ISO 14126:2023. It is identical to ISO 14126:2023. It supersedes BS EN ISO 14126:1999, which is withdrawn.

The UK participation in its preparation was entrusted to Technical Committee PRI/42, Fibre reinforced thermosetting plastics and prepregs.

A list of organizations represented on this committee can be obtained on request to its committee manager.

Contractual and legal considerations

This publication has been prepared in good faith, however no representation, warranty, assurance or undertaking (express or implied) is or will be made, and no responsibility or liability is or will be accepted by BSI in relation to the adequacy, accuracy, completeness or reasonableness of this publication. All and any such responsibility and liability is expressly disclaimed to the full extent permitted by the law.

This publication is provided as is, and is to be used at the recipient's own risk.

The recipient is advised to consider seeking professional guidance with respect to its use of this publication.

This publication is not intended to constitute a contract. Users are responsible for its correct application.

© The British Standards Institution 2023
Published by BSI Standards Limited 2023

ISBN 978 0 539 12685 3

ICS 83.120

Compliance with a British Standard cannot confer immunity from legal obligations.

This British Standard was published under the authority of the Standards Policy and Strategy Committee on 31 October 2023.

Amendments/corrigenda issued since publication

Date	Text affected

Documents
Document Sharing Hub

Full document details: BS EN ISO 14126:2023

EUROPEAN STANDARD

NORME EUROPÉENNE

EUROPÄISCHE NORM

EN ISO 14126

October 2023

ICS 83.120

Supersedes EN ISO 14126:1999, EN ISO 14126:1999/AC:2002

English Version

Fibre-reinforced plastic composites - Determination of compressive properties in the in-plane direction (ISO 14126:2023)

Composites plastiques renforcés de fibres - Détermination des caractéristiques en compression dans le plan (ISO 14126:2023)

Faserverstärkte Kunststoffe - Bestimmung der Druckeigenschaften in der Laminatebene (ISO 14126:2023)

This European Standard was approved by CEN on 5 October 2023.

CEN members are bound to comply with the CEN/CENELEC Internal Regulations which stipulate the conditions for giving this European Standard the status of a national standard without any alteration. Up-to-date lists and bibliographical references concerning such national standards may be obtained on application to the CEN-CENELEC Management Centre or to any CEN member.

This European Standard exists in three official versions (English, French, German). A version in any other language made by translation under the responsibility of a CEN member into its own language and notified to the CEN-CENELEC Management Centre has the same status as the official versions.

CEN members are the national standards bodies of Austria, Belgium, Bulgaria, Croatia, Cyprus, Czech Republic, Denmark, Estonia, Finland, France, Germany, Greece, Hungary, Iceland, Ireland, Italy, Latvia, Lithuania, Luxembourg, Malta, Netherlands, Norway, Poland, Portugal, Republic of North Macedonia, Romania, Serbia, Slovakia, Slovenia, Spain, Sweden, Switzerland, Türkiye and United Kingdom.

EUROPEAN COMMITTEE FOR STANDARDIZATION
COMITÉ EUROPÉEN DE NORMALISATION
EUROPÄISCHES KOMITEE FÜR NORMUNG

CEN-CENELEC Management Centre: Rue de la Science 23, B-1040 Brussels

© 2023 CEN All rights of exploitation in any form and by any means reserved worldwide for CEN national Members.

Ref. No. EN ISO 14126:2023 E

Documents
Document Sharing Hub

Full document details: BS EN ISO 14126:2023

European foreword

This document (EN ISO 14126:2023) has been prepared by Technical Committee ISO/TC 61 "Plastics" in collaboration with Technical Committee CEN/TC 249 “Plastics” the secretariat of which is held by SIS.

This European Standard shall be given the status of a national standard, either by publication of an identical text or by endorsement, at the latest by April 2024, and conflicting national standards shall be withdrawn at the latest by April 2024.

Attention is drawn to the possibility that some of the elements of this document may be the subject of patent rights. CEN shall not be held responsible for identifying any or all such patent rights.

This document supersedes EN ISO 14126:1999, EN ISO 14126:1999/AC:2002.

Any feedback and questions on this document should be directed to the users’ national standards body/national committee. A complete listing of these bodies can be found on the CEN website.

According to the CEN-CENELEC Internal Regulations, the national standards organizations of the following countries are bound to implement this European Standard: Austria, Belgium, Bulgaria, Croatia, Cyprus, Czech Republic, Denmark, Estonia, Finland, France, Germany, Greece, Hungary, Iceland, Ireland, Italy, Latvia, Lithuania, Luxembourg, Malta, Netherlands, Norway, Poland, Portugal, Republic of North Macedonia, Romania, Serbia, Slovakia, Slovenia, Spain, Sweden, Switzerland, Türkiye and the United Kingdom.

Endorsement notice

The text of ISO 14126:2023 has been approved by CEN as EN ISO 14126:2023 without any modification.

Documents
Document Sharing Hub

Full document details: BS EN ISO 14126:2023

Contents

Page

Foreword ... **v**
Introduction ... **vi**
1 Scope ... **1**
2 Normative references ... **1**
3 Terms and definitions ... **2**
4 Principle ... **3**
5 Apparatus ... **4**
5.1 Test machine ... 4
5.1.1 General ... 4
5.1.2 Speed of testing ... 4
5.1.3 Load measurement ... 4
5.2 Strain measurement ... 4
5.3 Micrometer ... 5
5.4 Loading fixtures ... 5
5.4.1 General ... 5
5.4.2 Method 1: Shear loading ... 5
5.4.3 Method 2: Combined loading ... 7
6 Test specimens ... **8**
6.1 Shape and dimensions ... 8
6.1.1 Type A specimen ... 8
6.1.2 Type B specimen ... 9
6.2 Preparation ... 10
6.2.1 General ... 10
6.2.2 End-tab material ... 10
6.2.3 Application of end tabs to specimens ... 10
6.2.4 Machining the specimens ... 10
6.3 Checking specimen quality ... 10
6.4 Anisotropy ... 11
7 Number of test specimens ... **11**
8 Conditioning ... **11**
9 Procedures ... **11**
10 Expression of results ... **13**
10.1 Compressive strength calculation ... 13
10.2 Compressive modulus calculation ... 13
10.3 Compressive failure strain calculation ... 14
10.4 Statistical parameters ... 14
10.5 Significant figures ... 14
11 Precision ... **14**
12 Test report ... **15**
Annex A (normative) **Alignment of specimen and loading train** ... **16**
Annex B (normative) **Specimen preparation** ... **17**
Annex C (informative) **Compression fixtures for method 1** ... **19**
Annex D (informative) **Compression fixtures for method 2** ... **21**
Annex E (informative) **Euler buckling criteria** ... **25**
Annex F (informative) **Predicted tab length** ... **26**

Documents
Document Sharing Hub

© ISO 2023 – All rights reserved

Full document details: BS EN ISO 14126:2023

Annex G (informative) **Recommendations for strain and bending measurements using digital image correlation (DIC)** **27**

Bibliography **30**

© ISO 2023 – All rights reserved

Documents
Document Sharing Hub

Full document details: BS EN ISO 14126:2023

Foreword

ISO (the International Organization for Standardization) is a worldwide federation of national standards bodies (ISO member bodies). The work of preparing International Standards is normally carried out through ISO technical committees. Each member body interested in a subject for which a technical committee has been established has the right to be represented on that committee. International organizations, governmental and non-governmental, in liaison with ISO, also take part in the work. ISO collaborates closely with the International Electrotechnical Commission (IEC) on all matters of electrotechnical standardization.

The procedures used to develop this document and those intended for its further maintenance are described in the ISO/IEC Directives, Part 1. In particular, the different approval criteria needed for the different types of ISO document should be noted. This document was drafted in accordance with the editorial rules of the ISO/IEC Directives, Part 2 (see www.iso.org/directives).

ISO draws attention to the possibility that the implementation of this document may involve the use of (a) patent(s). ISO takes no position concerning the evidence, validity or applicability of any claimed patent rights in respect thereof. As of the date of publication of this document, ISO had not received notice of (a) patent(s) which may be required to implement this document. However, implementers are cautioned that this may not represent the latest information, which may be obtained from the patent database available at www.iso.org/patents. ISO shall not be held responsible for identifying any or all such patent rights.

Any trade name used in this document is information given for the convenience of users and does not constitute an endorsement.

For an explanation of the voluntary nature of standards, the meaning of ISO specific terms and expressions related to conformity assessment, as well as information about ISO's adherence to the World Trade Organization (WTO) principles in the Technical Barriers to Trade (TBT), see www.iso.org/iso/foreword.html.

This document was prepared by Technical Committee Technical Committee ISO/TC 61, *Plastics*, Subcommittee SC 13, *Composites and reinforcement fibres*, in collaboration with the European Committee for Standardization (CEN) Technical Committee CEN/TC 249, *Plastics,* in accordance with the Agreement on technical cooperation between ISO and CEN (Vienna Agreement).

This second edition cancels and replaces the first edition (ISO 14126:1999), which has been technically revised.

The main changes are as follows:

— a new normative Annex A, alignment of specimen and loading train, has been added and subsequent annexes have been renumbered;

— Annex B, specimen preparation, is now normative to emphasise the importance of producing good quality specimens;

— two new informative Annexes F and G have been added.

Any feedback or questions on this document should be directed to the user's national standards body. A complete listing of these bodies can be found at www.iso.org/members.html.

© ISO 2023 – All rights reserved

Documents
Document Sharing Hub
Full document details: BS EN ISO 14126:2023

Introduction

This document, originally published in 1999, was based on ISO 8515[1] with the scope extended from glass-fibre reinforcement to include all fibre-reinforced plastic composites, such as composites based on carbon and aramid fibres. Other source documents consulted included ASTM D 3410[2], SACMA SRM1[3], prEN 2850[4], CRAG 400[5], DIN 65380[6] and JIS K7076[7]. Several different types of anti-buckling fixtures/loading jigs, different materials and different specimen sizes are covered by these source documents, although all are parallel-sided coupons. New or modified geometry support jigs are still being developed, for example in JIS K7018[8].

This document harmonizes and rationalizes the current situation by:

a) concentrating on the quality of the test by limiting the maximum bending strain allowable (i.e. 10 % between 10 % and 90 % of the maximum load, as recommended by ASTM), so that an axial-load case can be assumed;

b) standardizing on two related specimen designs, one principally for aerospace type unidirectional pre-impregnated materials (i.e. Type A) and one for other materials/formats (i.e. Types B1/B2). The chosen specimen design can be used with different loading fixtures;

c) defining acceptable failure criteria (e.g. avoiding within grip failures);

d) including an equation for determining the specimen minimum thickness to avoid Euler buckling proposed by ASTM for harmonization purposes (taken from ASTM D 3410[2] in a modified form);

e) allowing any design of support/loading fixture to be used that meets the above bending requirements, using different principles of loading (i.e. essentially shear and combined loading);

f) ensuring that the test specimen and loading/support fixture are well aligned (see Annex A);

g) concentrating on the quality of specimen preparation (see Annex B);

h) including guidance on the use of digital image correlation (DIC) for strain and bending measurements (see Annex G);

NOTE 1 Compression properties measured in the through-thickness direction (direction 3 in Figure 1) are covered by ISO 20975-1[9].

NOTE 2 Compression properties of rigid plastics having only unaligned short (<7,5 mm) fibres or no fibre content [rather than long (>7,5 mm) discontinuous or continuous fibres] is covered by ISO 604[10].

© ISO 2023 – All rights reserved
Documents
Document Sharing Hub
Full document details: BS EN ISO 14126:2023

Fibre-reinforced plastic composites — Determination of compressive properties in the in-plane direction

1 Scope

1.1 This document specifies methods for determining the compressive properties, in directions parallel to the plane of lamination, of fibre-reinforced plastic composites, based on thermosetting or thermoplastic matrices. The compressive properties are of interest for specifications and quality-control purposes. The test specimens are machined from a flat test plate, or from suitable finished or semi-finished products.

1.2 Two loading methods and two types of specimen are described.

The loading methods are:

— Method 1: provides shear loading of the specimen (gauge length unsupported)

— Method 2: provides combined loading of the specimen (gauge length unsupported)

NOTE For tabbed specimens loaded using method 2, load is transferred through a combination of end-loading and shear-loading through the tabs.

The specimen designs are:

— Type A specimen: rectangular cross-section, fixed thickness, end-tabbed (mainly for aerospace style preimpregnates (~ 0,125 mm ply thickness)

— Type B specimen: rectangular cross-section, range of thicknesses, untabbed or end-tabbed, two specimen sizes are available (B1 and B2).

The Type A specimen is used for unidirectionally or biaxially reinforced materials tested in the fibre direction, where the fibres are normally either aligned continuous or aligned long (>7,5 mm) discontinuous. The Type B1 and B2 specimens are used for multi-directional aligned; mat, fabric and other multi-directionally reinforced materials where the fibre structure is more complex and/or coarser.

1.3 This document gives criteria for checking that the combination of test method and specimen design result in valid failures. It is noted that alternative test method/specimen combinations will not necessarily give the same result.

1.4 The methods specify required dimensions for the specimen. Tests carried out on specimens of other dimensions, or on specimens that are prepared under different conditions, can produce results that are not comparable. Other factors, such as the speed of testing, the support fixture used and the conditioning of the specimens, can influence the results.

2 Normative references

The following documents are referred to in the text in such a way that some or all of their content constitutes requirements of this document. For dated references, only the edition cited applies. For undated references, the latest edition of the referenced document (including any amendments) applies.

ISO 291, *Plastics — Standard atmospheres for conditioning and testing*

ISO 1268 (all parts), *Fibre-reinforced plastics — Methods of producing test plate*

Documents
Document Sharing Hub

© ISO 2023 – All rights reserved

Full document details: BS EN ISO 14126:2023

ISO 2602, *Statistical interpretation of test results — Estimation of the mean — Confidence interval*

ISO 7500-1, *Metallic materials — Calibration and verification of static uniaxial testing machines — Part 1: Tension/compression testing machines — Calibration and verification of the force-measuring system*

ISO 9513, *Metallic materials — Calibration of extensometer systems used in uniaxial testing*

ISO 23788, *Metallic materials — Verification of the alignment of fatigue testing machines*

ASTM E 1012, *Standard practice for verification of testing frame and specimen alignment under tensile and compressive axial force application*

3 Terms and definitions

For the purposes of this document, the following terms and definitions apply.

ISO and IEC maintain terminology databases for use in standardization at the following addresses:

— ISO Online browsing platform: available at https://www.iso.org/obp

— IEC Electropedia: available at https://www.electropedia.org/

3.1
compressive stress
σ_c
compressive force experienced by the test specimen, at a particular time, divided by the initial cross-sectional area of the parallel-sided portion of the specimen

Note 1 to entry: It is expressed in megapascals.

3.2
compressive strength
compressive failure stress
σ_{cM}
maximum *compressive stress* (3.1) sustained by the specimen

Note 1 to entry: It is expressed in megapascals.

3.3
compressive strain
ε_c
decrease in length per unit length of the original gauge length

Note 1 to entry: It is expressed as a dimensionless ratio or in percent.

3.4
compressive failure strain
ε_{cM}
longitudinal compressive strain at the compressive failure stress

Note 1 to entry: It is expressed as a dimensionless ratio or in percent.

3.5
modulus of elasticity in compression
chord modulus
E_c
stress difference (σ" minus σ') divided by the corresponding strain difference (Ɛ" (= 0,002 5) minus Ɛ' (= 0,000 5))

Note 1 to entry: It is expressed in megapascals.

Note 2 to entry: See 10.2.

© ISO 2023 – All rights reserved
Documents
Document Sharing Hub
Full document details: BS EN ISO 14126:2023

3.6
specimen coordinate axes
1, 2, 3
orthogonal coordinate axes for material with the fibres preferentially aligned in one direction within a planar laminate.

Note 1 to entry: See Figure 1. The directions, in the plane of the laminate, parallel to the fibre axes is specified as the "1"-direction and the direction perpendicular to the fibre axes the "2"-direction. For other materials, the "1"-direction is normally specified in terms of a feature associated with the production process, such as the long or warp direction for a continuous-sheet or fabric process. The "2"-direction is again perpendicular, in the plane, to the "1" direction. The direction perpendicular to the plane is the “3” direction. Results for specimens cut parallel to the "1"-direction are identified by the subscript "11" (e.g. E_{c11}). Similarly, results for specimens cut parallel to the "2"-direction are identified by the subscript "22" (e.g. E_{c22}).

Note 2 to entry: The "1"-direction is also referred to as the 0° or longitudinal direction, and the "2"-direction as the 90° or transverse direction. More generally, the X, Y and Z (through-thickness) coordinate system for any material can be equated to the "1"-, "2"- and "3"-directions.

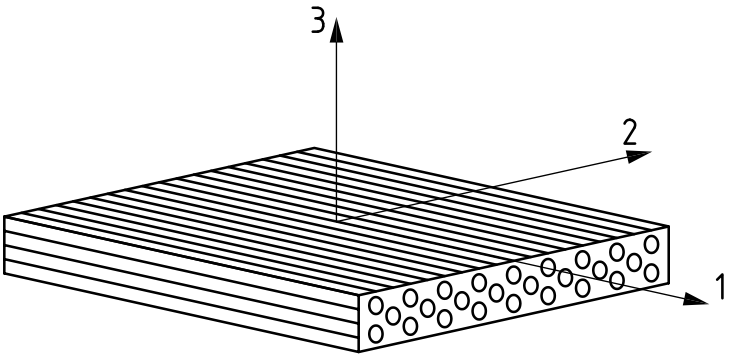

Figure 1 — Unidirectionally reinforced composite plate element showing symmetry axes

3.7
gauge length
L_0
initial distance between the gauge marks on the central part of the test specimen

Note 1 to entry: It is expressed in millimetres (mm).

3.8
thickness
h
smaller initial dimension of the rectangular cross-section in the central part of a test specimen

Note 1 to entry: It is expressed in millimetres (mm).

3.9
width
b
larger initial dimension of the rectangular cross-section in the central part of a test specimen

Note 1 to entry: It is expressed in millimetres (mm).

4 Principle

An axial force is applied to the unsupported gauge length of a rectangular specimen held in an anti-buckling loading/support fixture, while the applied load and strain in this gauge length area are monitored. The test method concentrates on the quality of the axial deformation experienced by the specimen. Any loading fixture can be used, provided specimen failure occurs below a 10 % bending

© ISO 2023 – All rights reserved

Documents
Document Sharing Hub
Full document details: BS EN ISO 14126:2023

strain in the specimen (between 10 % and 90 % of the maximum load); and fails in the prescribed manner and location.

The compressive load is applied to the specimen:

— by shear loading through end tabs (Method 1);

— by a combined loading mode through direct specimen end loading and shear loading though the support fixture using a tabbed specimen (Method 2).

NOTE 1 The test results obtained by these methods using different specimen designs/sizes and different loading fixtures are not necessarily comparable.

NOTE 2 End-loading is not covered by this document as the fixture in Method B of EN 2850[4] for end-loading (c.f. modified ASTM D695[11]) is not suitable for the standard Type A or B specimens. End loading is, in many cases, a sufficient and simple method for determination of compressive modulus but is very limited for ultimate strength determination.

NOTE 3 Each of these methods shows specific advantages and disadvantages. For example, shear loading is not adapted for very thick laminates, because it causes strain distributions over the laminate thickness caused by shear strains and the tabs can shear off at high forces. Combined loading overcomes several of the problems described before and can also be used for higher laminate thicknesses. The disadvantage is the need for supplementary machining of the specimen ends to ensure parallelism and squareness tolerances are met when using end-tabbed specimens.

5 Apparatus

5.1 Test machine

5.1.1 General

The test machine shall be in accordance with ISO 7500-1 and ISO 9513, and meet the specifications given in 5.1.2 to 5.1.3. The test machine should be kept in good condition and worn parts (e.g. threads, grip faces) replaced. The test machine, gauge specimen and loading/support fixture alignment on the machine axis shall be checked regularly or after any part of the loading train is moved/reassembled using the procedures given in Annex A.

5.1.2 Speed of testing

The test machine shall be capable of maintaining the required speed of testing (see 9.5).

5.1.3 Load measurement

The force measurement system shall conform with class 1 as specified in ISO 7500-1 (i.e. error for indicated load shall not exceed ±1 % of the true value). Suitable data recording equipment (data-loggers) shall be used to record the load values throughout the tests.

5.2 Strain measurement

Strain shall be determined by means of strain gauges, mechanical extensometers, or optical extensometers, [including digital image correlation (DIC)] meeting the requirement that the error for the indicated strain shall not exceed ±1 % (see ISO 9513). Strain shall be measured on both faces of the specimens to determine the degree of bending or on the sides (narrow face) of specimens if using DIC (see Annex G). Strain gauge elements for type A and B1 specimens shall be less than 3 mm in length. B2 specimens will accommodate longer strain gauges (e.g. ≥10 mm).

© ISO 2023 – All rights reserved
Documents
Document Sharing Hub
Full document details: BS EN ISO 14126:2023