BS EN ISO 14708-6:2022

BSI Standards Publication

# Implants for surgery — Active implantable medical devices

Part 6: Particular requirements for active implantable medical devices intended to treat tachyarrhythmia (including implantable defibrillators)

Documents
Document Sharing Hub

Full document details: BS EN ISO 14708-6:2022

# National foreword

This British Standard is the UK implementation of EN ISO 14708-6:2022. It is identical to ISO 14708-6:2019.

The UK participation in its preparation was entrusted to Technical Committee CH/150/2, Cardiovascular implants.

A list of organizations represented on this committee can be obtained on request to its committee manager.

**Contractual and legal considerations**

This publication has been prepared in good faith, however no representation, warranty, assurance or undertaking (express or implied) is or will be made, and no responsibility or liability is or will be accepted by BSI in relation to the adequacy, accuracy, completeness or reasonableness of this publication. All and any such responsibility and liability is expressly disclaimed to the full extent permitted by the law.

This publication is provided as is, and is to be used at the recipient's own risk.

The recipient is advised to consider seeking professional guidance with respect to its use of this publication.

This publication is not intended to constitute a contract. Users are responsible for its correct application.

© The British Standards Institution 2022
Published by BSI Standards Limited 2022

ISBN 978 0 580 94685 1

ICS 11.040.40

**Compliance with a British Standard cannot confer immunity from legal obligations.**

This British Standard was published under the authority of the Standards Policy and Strategy Committee on 31 August 2022.

**Amendments/corrigenda issued since publication**

| Date | Text affected |
|---|---|

Documents
Document Sharing Hub

Full document details: BS EN ISO 14708-6:2022

EUROPEAN STANDARD

NORME EUROPÉENNE

EUROPÄISCHE NORM

# EN ISO 14708-6

July 2022

ICS 11.040.40

English version

# Implants for surgery - Active implantable medical devices - Part 6: Particular requirements for active implantable medical devices intended to treat tachyarrhythmia (including implantable defibrillators) (ISO 14708-6:2019)

Implants chirurgicaux - Dispositifs médicaux implantables actifs - Partie 6: Exigences particulières pour les dispositifs médicaux implantables actifs conçus pour traiter la tachyarythmie (y compris les défibrillateurs implantables) (ISO 14708-6:2019)

Chirurgische Implantate - Aktive implantierbare medizinische Geräte - Teil 6: Besondere Festlegungen für aktive implantierbare medizinische Produkte zur Behandlung von Tachyarrhythmie (einschließlich implantierbaren Defibrillatoren) (ISO 14708-6:2019)

This European Standard was approved by CEN on 6 July 2022.

CEN and CENELEC members are bound to comply with the CEN/CENELEC Internal Regulations which stipulate the conditions for giving this European Standard the status of a national standard without any alteration. Up-to-date lists and bibliographical references concerning such national standards may be obtained on application to the CEN-CENELEC Management Centre or to any CEN and CENELEC member.

This European Standard exists in three official versions (English, French, German). A version in any other language made by translation under the responsibility of a CEN and CENELEC member into its own language and notified to the CEN-CENELEC Management Centre has the same status as the official versions.

CEN and CENELEC members are the national standards bodies and national electrotechnical committees of Austria, Belgium, Bulgaria, Croatia, Cyprus, Czech Republic, Denmark, Estonia, Finland, France, Germany, Greece, Hungary, Iceland, Ireland, Italy, Latvia, Lithuania, Luxembourg, Malta, Netherlands, Norway, Poland, Portugal, Republic of North Macedonia, Romania, Serbia, Slovakia, Slovenia, Spain, Sweden, Switzerland, Türkiye and United Kingdom.

**CEN-CENELEC Management Centre:**
**Rue de la Science 23, B-1040 Brussels**

© 2022 CEN/CENELEC All rights of exploitation in any form and by any means reserved worldwide for CEN national Members and for CENELEC Members.

Ref. No. EN ISO 14708-6:2022 E

AVA Documents
Document Sharing Hub

Full document details: BS EN ISO 14708-6:2022

## European foreword

This document (EN ISO 14708-6:2022) has been prepared by Technical Committee ISO/TC 150 "Implants for surgery" in collaboration with Technical Committee CEN-CENELEC/ JTC 16 “Active Implantable Medical Devices” the secretariat of which is held by DKE.

This European Standard shall be given the status of a national standard, either by publication of an identical text or by endorsement, at the latest by January 2023, and conflicting national standards shall be withdrawn at the latest by January 2023.

Attention is drawn to the possibility that some of the elements of this document may be the subject of patent rights. CEN-CENELEC shall not be held responsible for identifying any or all such patent rights.

Any feedback and questions on this document should be directed to the users’ national standards body/national committee. A complete listing of these bodies can be found on the CEN and CENELEC websites.

According to the CEN-CENELEC Internal Regulations, the national standards organizations of the following countries are bound to implement this European Standard: Austria, Belgium, Bulgaria, Croatia, Cyprus, Czech Republic, Denmark, Estonia, Finland, France, Germany, Greece, Hungary, Iceland, Ireland, Italy, Latvia, Lithuania, Luxembourg, Malta, Netherlands, Norway, Poland, Portugal, Republic of North Macedonia, Romania, Serbia, Slovakia, Slovenia, Spain, Sweden, Switzerland, Türkiye and the United Kingdom.

## Endorsement notice

The text of ISO 14708-6:2019 has been approved by CEN-CENELEC as EN ISO 14708-6:2022 without any modification.

Documents
Document Sharing Hub

Full document details: BS EN ISO 14708-6:2022

# Contents

Page

**Foreword** ... **v**

**Introduction** ... **vi**

**1 Scope** ... **1**

**2 Normative references** ... **1**

**3 Terms and definitions** ... **2**

**4 Symbols and abbreviated terms** ... **6**

**5 General requirements for non-implantable parts** ... **6**
5.1 General requirements for non-implantable parts ... 6
5.2 General requirements for software ... 6
5.3 Usability of non-implantable parts ... 6
5.4 Data security and protection from harm caused by unauthorized information tampering 6
5.5 General requirements for risk management ... 6
5.6 Misconnection of parts of the active implantable medical device ... 6

**6 Measurement of *implantable pulse generator* and lead characteristics** ... **6**
6.1 Measurement of ***implantable pulse generator*** characteristics ... 6
6.1.1 General considerations ... 6
6.1.2 Measurement of the bradyarrhythmia characteristics ... 7
6.1.3 Measurement of ***ICD output voltage*** ... 7
6.1.4 Measurement of delivered ***CD pulse*** energy ... 8
6.1.5 Measurement of the antitachyarrhythmia pacing ***pulse amplitude*** ... 8
6.1.6 Measurement of the sensitivity of an implantable pulse generator with automatic sensitivity control ... 8
6.1.7 Charge time ... 9
6.1.8 ***Capacitor formation*** (capacitor maintenance) ... 9
6.2 Measurement of the electrical characteristic of a sensing/pacing lead ... 9

**7 General arrangement of the packaging** ... **9**

**8 General markings for active implantable medical devices** ... **9**

**9 Markings on the sales packaging** ... **9**

**10 Construction of the sales packaging** ... **11**

**11 Markings on the sterile pack** ... **11**

**12 Construction of the non-reusable pack** ... **13**

**13 Markings on the active implantable medical device** ... **13**

**14 Protection from unintended biological effects being caused by the active implantable medical device** ... **13**

**15 Protection from harm to the patient or user caused by external physical features of the active implantable medical device** ... **14**

**16 Protection from harm to the patient caused by electricity** ... **14**

**17 Protection from harm to the patient caused by heat** ... **18**
17.1 Protection from harm to the patient caused by heat ... 18
17.2 Active implantable medical device intended to supply heat ... 19

**18 Protection from ionizing radiation released or emitted from the active implantable medical device** ... **19**

**19 Protection from unintended effects caused by the device** ... **19**

**20 Protection of the device from damage caused by external defibrillators** ... **20**

© ISO 2019 – All rights reserved



Documents
Document Sharing Hub

Full document details: BS EN ISO 14708-6:2022

**21 Protection of the device from changes caused by high-power electrical fields applied directly to the patient** ..... **21**

**22 Protection of the active implantable medical device from changes caused by miscellaneous medical treatments** ..... **21**

**23 Protection of the active implantable medical device from mechanical forces** ..... **21**

**24 Protection of the active implantable medical device from damage caused by electrostatic discharge** ..... **25**

**25 Protection of the active implantable medical device from damage caused by atmospheric pressure changes** ..... **26**

**26 Protection of the active implantable medical device from damage caused by temperature changes** ..... **26**

**27 Protection of the active implantable medical device from electromagnetic non-ionizing radiation** ..... **26**

**28 Accompanying documentation** ..... **26**

**Annex A** (informative) **Relationship between the fundamental principles in ISO/TR 14283 and the clauses of this document** ..... **32**

**Annex B** (informative) **Notes on ISO 14708-6** ..... **53**

**Annex C** (informative) **Code for describing modes of *implantable pulse generators*** ..... **64**

**Bibliography** ..... **66**



© ISO 2019 – All rights reserved

Documents
Document Sharing Hub

Full document details: BS EN ISO 14708-6:2022

# Foreword

ISO (the International Organization for Standardization) is a worldwide federation of national standards bodies (ISO member bodies). The work of preparing International Standards is normally carried out through ISO technical committees. Each member body interested in a subject for which a technical committee has been established has the right to be represented on that committee. International organizations, governmental and non-governmental, in liaison with ISO, also take part in the work. ISO collaborates closely with the International Electrotechnical Commission (IEC) on all matters of electrotechnical standardization.

The procedures used to develop this document and those intended for its further maintenance are described in the ISO/IEC Directives, Part 1. In particular, the different approval criteria needed for the different types of ISO documents should be noted. This document was drafted in accordance with the editorial rules of the ISO/IEC Directives, Part 2 (see www.iso.org/directives).

Attention is drawn to the possibility that some of the elements of this document may be the subject of patent rights. ISO shall not be held responsible for identifying any or all such patent rights. Details of any patent rights identified during the development of the document will be in the Introduction and/or on the ISO list of patent declarations received (see www.iso.org/patents).

Any trade name used in this document is information given for the convenience of users and does not constitute an endorsement.

For an explanation of the voluntary nature of standards, the meaning of ISO specific terms and expressions related to conformity assessment, as well as information about ISO's adherence to the World Trade Organization (WTO) principles in the Technical Barriers to Trade (TBT) see www.iso.org/iso/foreword.html.

ISO 14708-6 was prepared by Technical Committee ISO/TC 150, *Implants for surgery*, Subcommittee SC 6, *Active implants*.

This second edition cancels and replaces the first edition (ISO 14708-6:2010), which has been technically revised.

The main changes compared to the previous edition are as follows.

— addition of requirements for congestive heart failure devices;

— introduction of nomenclature for devices having more than two channels of pacing/sensing/defibrillation as shown in ISO 14117:2019, Annex N;

— inclusion of new temporary exposure criteria in 17.1 for outer surface temperatures exceeding 39 °C;

— revision of atmospheric pressure test requirements in Clause 25 to align with requirements of ISO 14708-2;

— replacement of detailed requirements in Clause 27 by reference to ISO 14117.

Other changes include updates to selected definitions and incorporation of new measurement equipment accuracy requirements.

A list of all parts in the ISO 14708 series can be found on the ISO website.

Any feedback or questions on this document should be directed to the user's national standards body. A complete listing of these bodies can be found at www.iso.org/members.html.

© ISO 2019 – All rights reserved

Documents
Document Sharing Hub
Full document details: BS EN ISO 14708-6:2022

# Introduction

This document specifies particular requirements for *implantable cardioverter defibrillators* and the functions of active implantable medical devices intended to treat tachyarrhythmia, to provide basic assurance of safety for both patients and users.

An external defibrillator is a medical device used, in the emergency setting, to deliver a high-energy shock to the heart, by means of *electrode*s applied to the external chest wall, in patients suffering ventricular fibrillation (a rapid, disorganized and potentially lethal heart rhythm abnormality), to restore normal heart action. External defibrillators can also be used, in emergency or elective settings, to terminate other ventricular or atrial tachyarrhythmias by delivery of a high-energy shock, synchronized to the intrinsic cardiac rhythm, a procedure known as *cardioversion*. In patients known to be at risk of such arrhythmias, due to the occurrence of previous episodes or the presence of specific predisposing cardiac conditions, an *implantable cardioverter defibrillator* might be implanted to perform similar functions. The implantable device, which is much smaller than an external defibrillator, is contained within a sealed, encapsulating enclosure. It generates high voltage *pulses* from an enclosed, miniature, electrical battery. The *pulses* are transmitted to the heart by means of implanted, insulated conductors with *electrode*s (leads). The *implantable cardioverter defibrillator* can also incorporate other sensing and pacing functions, such as rate support for bradycardia and *antitachycardia pacing* (*ATP*) to terminate certain tachyarrhythmias without the need of a high-energy shock. The defibrillator can be adjusted non-invasively by means of an electronic device, known as a programmer.

In recent years, other active implantable cardiovascular devices have emerged, most notably devices that perform the function of improving cardiac output by optimizing ventricular synchrony, in addition to performing *ICD* functions.

Although these devices can deliver an additional therapy with respect to *ICD* devices, most of their requirements are similar so that, in most cases, the concepts that apply to *ICD*s also apply to *CRT-D* devices, and the appropriate way to test a *CRT-D* device is similar to the way *ICD*s are tested.

This document is relevant to all parts of active implantable medical devices intended to treat tachyarrhythmia other than pacing functions to control bradyarrhythmia or provide cardiac resynchronization. Typical examples are *implantable pulse generator*s, leads, *adaptors*, *accessories*, programmers and the related software (bradyarrhythmia and cardiac resynchronization pacing functions are dealt with in ISO 14708-2).

The requirements of this document supplement or modify those of ISO 14708-1, *Implants for surgery — Active implantable medical devices — Part 1: General requirements for safety, marking and for information to be provided by the manufacturer*, hereinafter referred to as ISO 14708-1. The requirements of this document take priority over those of ISO 14708-1.

In this document, terms printed in italic letters are used as defined in Clause 3. Where a defined term is used as a qualifier in another term, it is not printed in italic letters unless the concept thus qualified is also defined.

Information is also provided in Annex A that explains the relationship between ISO/TR 14283, *Implants for surgery — Essential principles of safety and performance*, ISO 14708-1 and this document.

Notes on this document are provided in Annex B for information.

Annex C describes a coding system that may be used to designate tachyarrhythmia therapy modes. All annexes are informative.


© ISO 2019 – All rights reserved
Documents
Document Sharing Hub
Full document details: BS EN ISO 14708-6:2022

# Implants for surgery — Active implantable medical devices —

## Part 6:
## Particular requirements for active implantable medical devices intended to treat tachyarrhythmia (including implantable defibrillators)

## 1 Scope

This document specifies requirements that are applicable to *implantable cardioverter defibrillators* and *CRT-D*s and the functions of active implantable medical devices intended to treat tachyarrhythmia.

The tests that are specified in ISO 14708 are type tests and are to be carried out on samples of a device to show compliance.

This document was designed for tachyarrhythmia *pulse* generators used with either *endocardial lead*s or *epicardial lead*s. At the time of this edition, the authors recognized the emergence of technologies that do not use *endocardial* or *epicardial lead*s for which adaptations of this part will be required. Such adaptations are left to the discretion of manufacturers incorporating these technologies.

This document is also applicable to some non-implantable parts and *accessories* of the devices (see Note 1).

The characteristics of the *implantable pulse generator* or lead shall be determined by either the appropriate method detailed in this document or by any other method demonstrated to have accuracy equal to, or better than, the method specified. In the case of dispute, the method detailed in this document shall apply.

Any aspect of an active implantable medical device intended to treat bradyarrhythmias or cardiac resynchronization is covered by ISO 14708-2.

NOTE 1 The device that is commonly referred to as an active implantable medical device can in fact be a single device, a combination of devices, or a combination of a device or devices and one or more *accessories*. Not all of these parts are required to be either partially or totally implantable, but there is a need to specify some requirements of non-implantable parts and *accessories* if they could affect the safety or performance of the implantable device.

NOTE 2 In this document, terms printed in italics are used as defined in Clause 3. Where a defined term is used as a qualifier in another term, it is not printed in italics unless the concept thus qualified is also defined.

## 2 Normative references

The following documents are referred to in the text in such a way that some or all of their content constitutes requirements of this document. For dated references, only the edition cited applies. For undated references, the latest edition of the referenced document (including any amendments) applies.

ISO 5841-3:2013, *Implants for surgery — Cardiac pacemakers — Part 3: Low-profile connectors (IS-1) for implantable pacemakers*

ISO 11318:2002, *Cardiac defibrillators — Connector assembly DF-1 for implantable defibrillators — Dimensions and test requirements*

© ISO 2019 – All rights reserved

Documents
Document Sharing Hub
Full document details: BS EN ISO 14708-6:2022

ISO 14117:2019, *Active implantable medical devices — Electromagnetic compatibility — EMC test protocols for implantable cardiac pacemakers and implantable cardioverter defibrillators*

ISO 14708-1:2014, *Implants for surgery — Active implantable medical devices — Part 1: General requirements for safety, marking and for information to be provided by the manufacturer*

ISO 14708-2:2019, *Implants for surgery — Active implantable medical devices — Part 2: Cardiac pacemakers*

IEC/TR 60878:2015, *Graphical symbols for electrical equipment in medical practice*

## 3 Terms and definitions

For the purposes of this document, the terms and definitions given in ISO 14708-1 and the following apply.

— ISO Online browsing platform: available at http://www.iso.org/obp

— IEC Electropedia: available at http://www.electropedia.org/

**3.1**
**adaptor**
special connector used between an otherwise incompatible *implantable pulse generator* and a lead

[SOURCE: ISO 14708-2:2019, 3.2]

**3.2**
**implantable cardioverter defibrillator**
**ICD**
active implantable medical device comprising an *implantable pulse generator* and lead(s) that is intended to detect and correct tachycardias and fibrillation by application of *cardioversion/defibrillation pulse(*s) to the heart

**3.3**
**implantable pulse generator**
**IPG**
part of the active implantable medical device, including the power supply and electronic circuit that produces an electrical output

Note 1 to entry: For purposes of this document, the term *implantable pulse generator* describes any active implantable medical device that incorporates functions intended to treat tachyarrhythmias.

[SOURCE: ISO 14708-2:2019, 3.4, modified – "active implantable medical device" substituted for "*pacemaker*", NOTE 1 to entry added]

**3.4**
**sensitivity**
minimum signal required to control consistently the function of the *implantable pulse generator*

[SOURCE: ISO 14708-2:2019, 3.8]

**3.5**
**electrode**
electrically conducting part (usually the termination of a lead), which is designed to form an interface with body tissue or body fluid

[SOURCE: ISO 14708-2:2019, 3.9]

**3.6**
**endocardial lead**
lead with an *electrode* designed to make contact with the endocardium, or inner surface of the heart

[SOURCE: ISO 14708-2:2019, 3.12]


© ISO 2019 – All rights reserved
Documents
Document Sharing Hub
Full document details: BS EN ISO 14708-6:2022

**3.7**
**epicardial lead**
lead with an *electrode* designed to make contact with the epicardium, or outer surface of the heart

[SOURCE: ISO 14708-2:2019, 3.13]

**3.8**
**transvenous**
approach to the heart through the venous system

[SOURCE: ISO 14708-2:2019, 3.14]

**3.9**
**insertion diameter**
<lead>minimum bore of a rigid cylindrical tube into which the lead (not including the connector) can be inserted

[SOURCE: ISO 14708-2:2019, 3.15]

**3.10**
**lead pacing impedance**
$Z_p$
impedance that is formed by the ratio of a voltage *pulse* to the resulting current

Note 1 to entry: The impedance is composed of the *electrode* to tissue interface and the lead impedance.

[SOURCE: ISO 14708-2:2019, 3.16].

**3.11**
**model designation**
name and/or a combination of letters and numbers used by a manufacturer to distinguish, by function or type, one device from another

[SOURCE: ISO 14708-2:2019, 3.17]

**3.12**
**serial number**
unique combination of letters and/or numbers, selected by the manufacturer, intended to distinguish a device from other devices with the same *model designation*

[SOURCE: ISO 14708-2:2019, 3.18]

**3.13**
**pulse**
electrical output of an *implantable pulse generator* other than *CD pulse* intended to stimulate the myocardium

[SOURCE: ISO 14708-2:2019, 3.20, modified – added "other than *CD pulse*".]

**3.14**
**pulse amplitude**
amplitude of the *pulse*

[SOURCE: ISO 14708-2:2019, 3.21]

**3.15**
**pulse duration**
duration of the *pulse*

[SOURCE: ISO 14708-2:2019, 3.22]

© ISO 2019 – All rights reserved

Documents
Document Sharing Hub
Full document details: BS EN ISO 14708-6:2022

**3.16**
**pulse interval**
interval between equivalent points of two consecutive *pulses*

[SOURCE: ISO 14708-2:2019, 3.23]

**3.17**
**automatic sensitivity control**
automatic adjustment of the *sensitivity* in response to available physiological signals

**3.18**
**beginning of service**
**BOS**
time at which an individual *implantable pulse generator* is first released by the manufacturer as fit for being placed on the market

[SOURCE: ISO 14708-2:2019, 3.35]

**3.19**
**end of service**
**EOS**
time at which the *prolonged service period* has elapsed and no further pacing function is specified nor can be expected

[SOURCE: ISO 14708-2: 2019, 3.36]

**3.20**
**prolonged service period**
**PSP**
period beyond the *recommended replacement time* during which the *implantable pulse generator* continues to function as specified by the manufacturer

[SOURCE: ISO 14708-2:2019, 3.38, modified – deleted "to prolong basic bradyarrhythmia pacing"]

**3.21**
**power source indicator**
means of indicating the electrical status of the power source during the *implantable pulse generator's* service life

[SOURCE: ISO 14708-2:2019, 3.39]

**3.22**
**recommended replacement time**
**RRT**
time at which the *power source indicator* reaches the value set by the manufacturer of the *implantable pulse generator* for its recommended replacement.

Note 1 to entry: This indicates entry into the *prolonged service period*

[SOURCE: ISO 14708-2:2019, 3.40]

**3.23**
**antitachycardia pacing**
**ATP**
cardiac pacing sequences intended to terminate re-entry tachycardias

**3.24**
**ATP only device**
*implantable pulse generator* capable of delivering rapid sequences of pacing *pulses* to terminate ventricular (VT) and atrial (AT) tachycardia and atrial fibrillation (AF)


© ISO 2019 – All rights reserved
Documents
Document Sharing Hub
Full document details: BS EN ISO 14708-6:2022

**3.25**
**cardioversion**
termination of atrial tachyarrhythmia or ventricular tachycardia by *pulse(s)* synchronized to cardiac events

**3.26**
**cardioversion/defibrillation pulse**
**CD pulse**
high-energy monophasic, biphasic, or multiphasic *pulse* intended to restore normal rhythm by shocking the heart

**3.27**
**capacitor formation**
any charge to maximum-programmed energy that dissipates off the capacitors (is not dumped) for at least 10 min

**3.28**
**cardioversion/defibrillation lead**
**CD lead**
lead used to conduct a *CD pulse* from the *implantable pulse generator* to the heart

**3.29**
**charge time**
the time required to charge the high-voltage capacitors to a specified *CD pulse energy*

**3.30**
**delivered cardioversion/defibrillation pulse energy**
**delivered CD pulse energy**
total energy delivered to a standard load (50 Ω) by all phases of a *CD pulse*, measured according to 6.1.4

**3.31**
**defibrillation**
termination of fibrillation

**3.32**
**ICD output voltage**
peak voltage of the *cardioversion/defibrillation pulse*s, measured according to 6.1.3

**3.33**
**terminal**
electrically separate conductive device connection

**3.34**
**implantable cardiac resynchronization therapy/defibrillator device**
**CRT-D**
active implantable medical device intended to detect and correct tachycardias and fibrillation by application of *cardioversion/defibrillation pulse*s to the heart, and to provide improved ventricular activation to optimize cardiac output, comprising an *implantable pulse generator* and leads

**3.35**
**accessory**
article which, while not being a device, is intended specifically by the manufacturer to be used together with a device in accordance with the use of the device intended by the device manufacturer

[SOURCE: ISO 14708-2:2019, 3.1]

© ISO 2019 – All rights reserved

Documents
Document Sharing Hub
Full document details: BS EN ISO 14708-6:2022

**3.36**
**pacemaker**
active implantable medical device intended to treat bradyarrhythmias, comprising an *implantable pulse generator* and lead(s)

[SOURCE: ISO 14708-2:2019, 3.3]

# 4 Symbols and abbreviated terms

The text in Clause 4 of ISO 14708-1:2014 applies.

NOTE See ISO 27185 for symbols to use when expressing information so as to reduce the need for multiple languages on packaging and in manuals.

# 5 General requirements for non-implantable parts

## 5.1 General requirements for non-implantable parts

The text in 5.1 of ISO 14708-1:2014 applies.

## 5.2 General requirements for software

The text in 5.2 of ISO 14708-1:2014 applies.

## 5.3 Usability of non-implantable parts

The text in 5.3 of ISO 14708-1:2014 applies.

## 5.4 Data security and protection from harm caused by unauthorized information tampering

The text in 5.4 of ISO 14708-1:2014 applies.

## 5.5 General requirements for risk management

The text in 5.5 of ISO 14708-1:2014 applies.

## 5.6 Misconnection of parts of the active implantable medical device

The text in 5.6 of ISO 14708-1:2014 applies.

# 6 Measurement of *implantable pulse generator* and lead characteristics

## 6.1 Measurement of *implantable pulse generator* characteristics

### 6.1.1 General considerations

The manufacturer shall ensure that measurement equipment accuracy is sufficient to support the stated tolerances for the parameters being measured within this clause and stated by the manufacturer in the accompanying documentation (see 28.8).

The values of the electrical characteristics for the *implantable pulse generator* measured in accordance with the methods described in this clause shall be within the range of values stated by the manufacturer in the accompanying documentation (see 28.8.2).


© ISO 2019 – All rights reserved
Documents
Document Sharing Hub
Full document details: BS EN ISO 14708-6:2022

**CAUTION — The tests in this subclause can employ the use of high voltage. Failure to use safe laboratory practices can result in severe electrical shock, resulting in personal injury or death to the persons handling the equipment or conducting the test. Also damage to electrical equipment is possible.**

The measurements shall be made with the *implantable pulse generator* at a temperature of 37 °C ± 2 °C.

### 6.1.2 Measurement of the bradyarrhythmia characteristics

Measurement of the bradyarrhythmia and cardiac resynchronization characteristics of the *implantable pulse generator* shall be performed using the appropriate methods specified in 6.1 of ISO 14708-2:2019. The characteristics shall be measured with the tachyarrhythmia therapies inactivated.

### 6.1.3 Measurement of *ICD output voltage*

NOTE This clause does not apply to *ATP only devices*.

Procedure: Use an oscilloscope, with input impedance of nominal 1 MΩ, ≤ 30 pF.

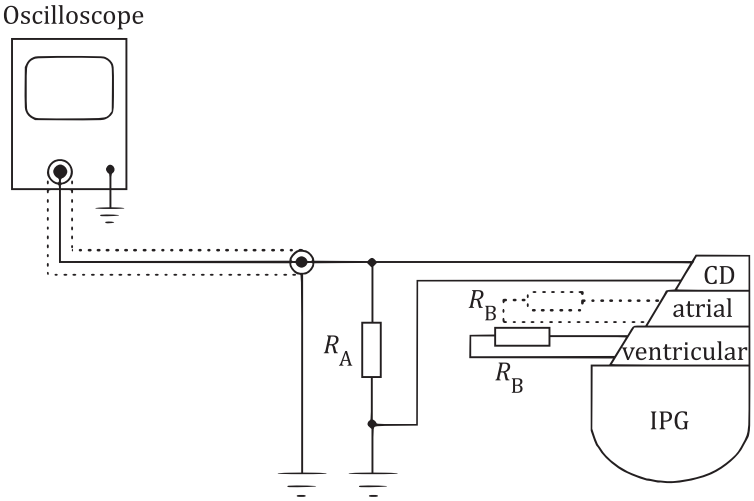


**Figure 1 — Measurement of *CD pulse* characteristics**

The *implantable pulse generator* shall be connected to the oscilloscope as shown in Figure 1. *terminals* of the *implantable pulse generator* intended to deliver a *CD pulse* shall be connected to a low-inductance load of 50 Ω ± 1 % ($R_A$). Other inputs/outputs shall be connected to loads of 500 Ω ± 5 % ($R_B$). The oscilloscope shall be adjusted to display one phase of the *CD pulse*.

The *implantable pulse generator* shall be programmed to the maximum *CD pulse energy* setting.

The *ICD output voltage* ($V_{max}$) shall be determined by recording the peak amplitude of the voltage across the resistor $R_A$ (see Figure 1 and Figure 2).

The procedure shall be repeated for each type of *CD pulse* (i.e. monophasic, biphasic waveform).

The entire procedure shall be repeated for the other required *CD pulse energy* settings [see 28.8.2 d) 2)].

The results shall be expressed in volts (V) and shall be within the tolerance of disclosed data [see 28.8.2 d) 2)].

© ISO 2019 – All rights reserved

Documents
Document Sharing Hub
Full document details: BS EN ISO 14708-6:2022

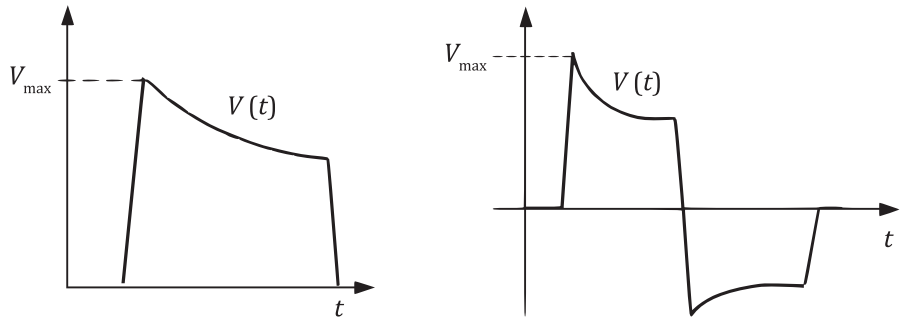


Biphasic waveform

**Figure 2 — Measurement of *ICD output voltage***

### 6.1.4 Measurement of delivered *CD pulse* energy

NOTE This clause does not apply to *ATP only devices*.

Procedure: Use the oscilloscope and measurement set-up specified in 6.1.3.

The oscilloscope shall be adjusted to display one *CD pulse*. The *implantable pulse generator* shall be programmed to deliver the maximum *CD pulse energy* setting.

The *CD pulse* shall be determined by recording the voltage waveform $V_{(t)}$ (see Figure 2) across the resistor $R_A$ (see Figure 1). The *delivered CD pulse energy*, *W*, shall be calculated by applying the formula:

$$W = \int_0^{T_p} \frac{V^2(t)}{R_A} dt$$

where

$T_p$ = duration (all phases) of the *CD pulse*;

$V_{(t)}$ = instantaneous voltage;

$R_A$ = 50 Ω.

For devices with more than two output *terminals*, the *delivered CD pulse energy* (*W*) shall be determined by the sum of the energies delivered from each *terminal*, as measured by the manufacturer's disclosed method.

The entire procedure shall be repeated for the other required *CD pulse* energy settings [see 28.8.2 d) 2)].

The result shall be expressed in joules (J) and shall be within the tolerance of disclosed data [see 28.8.2 d) 2)].

### 6.1.5 Measurement of the antitachyarrhythmia pacing *pulse amplitude*

The low-voltage antitachyarrhythmia pacing *pulse amplitude* of an *implantable pulse generator* shall be measured with the device set in the as-shipped mode or as recommended by the manufacturer using the procedure in 6.1.2 of ISO 14708-2:2019 [see 28.8.2 d) 3)].

### 6.1.6 Measurement of the sensitivity of an implantable pulse generator with automatic sensitivity control

The lowest (most sensitive) *sensing threshold* for both positive and negative polarities shall be measured using a method as specified by the manufacturer [see 28.8.2 d) 4)].


© ISO 2019 – All rights reserved
Documents
Document Sharing Hub
Full document details: BS EN ISO 14708-6:2022

### 6.1.7 Charge time

NOTE This clause does not apply to *ATP only devices.*

The values of typical *charge times* (when the capacitors are fully formed) for maximum *CD pulse energy* shall be disclosed at *BOS* and at *RRT*, as a minimum [see 28.8.2 d) 5)].

### 6.1.8 *Capacitor formation* (capacitor maintenance)

NOTE This clause does not apply to *ATP only devices*.

If applicable the manufacturer shall provide instructions for periodic *capacitor formation* to be performed at least in connection with patient follow-up sessions, unless the *implantable pulse generator* provides a feature of fully automatic *capacitor formation*.

## 6.2 Measurement of the electrical characteristic of a sensing/pacing lead

The values of the electrical characteristics of any sensing/pacing lead of the *implantable cardioverter defibrillator* measured in accordance with the appropriate method specified in 6.2 of ISO 14708-2 shall be within the range of values stated by the manufacturer in the accompanying documentation (see 28.8.3).

# 7 General arrangement of the packaging

**7.1** The text in 7.1 of ISO 14708-1:2014 applies.

**7.2** The text in 7.2 of ISO 14708-1:2014 applies.

**7.3** The *implantable pulse generator* shall be shipped with the *antitachycardia pacing* and/or *cardioversion* and/or *defibrillation* inactivated.

Compliance is checked by inspection.

NOTE When *cardioversion* and/or *defibrillation* are inactivated the *implantable pulse generator* is not capable of delivering any *CD pulse(s)*.

# 8 General markings for active implantable medical devices

**8.1** The text in 8.1 of ISO 14708-1:2014 applies.

**8.2** The text in 8.2 of ISO 14708-1:2014 applies.

# 9 Markings on the sales packaging

**9.1** The text in 9.1 of ISO 14708-1:2014 applies.

**9.2** The text in 9.2 of ISO 14708-1:2014 applies.

**9.3** The text in 9.3 of ISO 14708-1:2014 applies.

© ISO 2019 – All rights reserved

Documents
Document Sharing Hub
Full document details: BS EN ISO 14708-6:2022

**9.4** The text in 9.4 of ISO 14708-1:2014 applies.

**9.4.1** The sales packaging containing an *implantable pulse generator* shall bear a list of the tachyarrhythmia therapies available.

Instead of using words to describe the tachyarrhythmia therapies, the mode codes in Annex C may be used.

Compliance is checked by inspection.

**9.4.2** The sales packaging containing an *implantable pulse generator* shall bear a statement that the tachyarrhythmia therapies of the *implantable pulse generator*, as shipped, are inactive.

NOTE 1 See 7.3 for the shipping requirements for *antitachycardia pacing*, *cardioversion* and *defibrillation*.

NOTE 2 For *ATP only devices*, the *CD terminal*s part of the requirement is not applicable.

Compliance is checked by inspection.

**9.4.3** If applicable, the sales packaging containing an *implantable pulse generator* shall bear a description of the most comprehensive bradyarrhythmia pacing mode available and, if different, the pacing mode as shipped.

NOTE The pacing mode as shipped is meant to be the pacing mode of the device available when first removed from its packaging if the device is shipped in a ready-to-implant state, or the mode first available upon activation without any additional programming.

Instead of describing the bradyarrhythmia pacing mode in words, the mode codes defined in Annex C of ISO 14708-2:2019 may be used in the markings and accompanying documentation to designate the bradyarrhythmia pacing mode of the *implantable pulse generator*.

Compliance is checked by inspection.

**9.4.4** The sales packaging containing a lead shall bear the following information necessary to appropriately prescribe the lead:

a) Identifying information as applicable: e.g. epicardial or endocardial; straight or shaped; unipolar, bipolar or multipolar; drug eluting; passive or active fixation; recommended anatomical placement.

b) Physical dimensions, including:

   1) the length (in centimetres);

   2) for a *transvenous lead*, the *insertion diameter* (in millimetres) and the size of the corresponding introducer (in French gauge);

   3) connector geometry shall be provided by a reference by symbols or markings defined in published standards or, if different, the bore depths and diameters in millimetres.

Compliance is checked by inspection.

**9.5** The text in 9.5 of ISO 14708-1:2014 applies.

**9.6** The text in 9.6 of ISO 14708-1:2014 applies.

**9.7** The text in 9.7 of ISO 14708-1:2014 applies.

**9.8** The text in 9.8 of ISO 14708-1:2014 applies.


© ISO 2019 – All rights reserved
Documents
Document Sharing Hub
Full document details: BS EN ISO 14708-6:2022

**9.9** If the intended use of an implantable part of an active implantable medical device enclosed within the sales packaging requires that it be connected to other devices or *accessories* not included in the package, the sales packaging shall identify the connector type (pace/sense, *cardioversion*/*defibrillation*, etc.), the configuration (unipolar, bipolar, etc.), and the connector geometry (lengths and diameters in millimetres or reference to published standards).

Compliance is checked by inspection.

**9.10** The text in 9.10 of ISO 14708-1:2014 applies.

**9.11** The text in 9.11 of ISO 14708-1:2014 applies.

**9.12** The text in 9.12 of ISO 14708-1:2014 applies.

**9.13** The text in 9.13 of ISO 14708-1:2014 applies.

**9.14** The text in 9.14 of ISO 14708-1:2014 applies.

**9.15** The sales packaging containing an *implantable pulse generator* shall be marked with the symbol for "dangerous voltage" (symbol 5036 in IEC TR 60878:2015).

NOTE This clause does not apply to *ATP only devices*.

Compliance is checked by inspection.

## 10 Construction of the sales packaging

**10.1** The text in 10.1 of ISO 14708-1:2014 applies.

**10.2** The text in 10.2 of ISO 14708-1:2014 applies.

**10.3** The text in 10.3 of ISO 14708-1:2014 applies.

NOTE Removable stickers, which provide supplementary information exceeding the information specified in Clause 9, need not to be subjected to the test specified in 10.3

**10.4** The text in 10.4 of ISO 14708-1:2014 applies.

## 11 Markings on the sterile pack

**11.1** The text in 11.1 of ISO 14708-1:2014 applies.

**11.2** The text in 11.2 of ISO 14708-1:2014 applies.

**11.3** The text in 11.3 of ISO 14708-1:2014 applies.

**11.4** The text in 11.4 of ISO 14708-1:2014 applies.

**11.5** The text in 11.5 of ISO 14708-1:2014 applies.

**11.6** The text in 11.6 of ISO 14708-1:2014 applies.

**11.7** The text in 11.7 of ISO 14708-1:2014 applies.

© ISO 2019 – All rights reserved

Documents
Document Sharing Hub
Full document details: BS EN ISO 14708-6:2022

**11.8** The text in 11.8 of ISO 14708-1:2014 applies.

**11.9** The text in 11.9 of ISO 14708-1:2014 applies.

**11.10** The sterile pack containing an *implantable pulse generator* shall bear a list of the tachyarrhythmia therapies available.

Instead of using words to describe the tachyarrhythmia therapies, the mode codes in Annex C may be used.

Compliance is checked by inspection.

**11.11** The sterile pack containing an *implantable pulse generator* shall bear a statement that the tachyarrhythmia therapies of the *implantable pulse generator,* as shipped, are inactive.

NOTE 1 See 7.3 for the shipping requirements for *antitachycardia pacing*, *cardioversion* and *defibrillation*.

NOTE 2 For *ATP only devices*, the *CD terminal*s part of the requirement is not applicable.

Compliance is checked by inspection.

**11.12** If applicable, the sterile pack containing an *implantable pulse generator* shall bear a description of the most comprehensive bradyarrhythmia pacing mode available and, if different, the mode as shipped.

NOTE The pacing mode as shipped is meant to be the pacing mode of the device available when first removed from its packaging if the device is shipped in a ready-to-implant state, or the mode first available upon activation without any additional programming.

Instead of describing the bradyarrhythmia pacing mode in words, the mode codes defined in Annex C of ISO 14708-2:2019 may be used in the markings and accompanying documentation to designate the bradyarrhythmia pacing mode of the *implantable pulse generator*.

Compliance is checked by inspection.

**11.13** The sterile pack containing an *implantable pulse generator* shall be marked with the symbol for "dangerous voltage" (symbol 5036 in IEC TR 60878:2015).

NOTE This clause does not apply to *ATP only devices*.

Compliance is checked by inspection.

**11.14** The sterile pack containing a lead shall bear the following information necessary to appropriately prescribe the lead:

a) Identifying information as applicable: e.g. epicardial or endocardial; straight or shaped; unipolar, bipolar or multipolar; drug eluting; passive or active fixation; recommended anatomical placement.

b) Physical dimensions, including:

   1) the length (in centimetres);

   2) for a *transvenous lead*, the *insertion diameter* (in millimetres) and the size of the corresponding introducer (in French gauge);

   3) connector geometry shall be provided by a reference by symbols or markings defined in published standards or, if different, the bore depths and diameters in millimetres.

NOTE Examples of standards providing connector geometries, symbols, or markings include ISO 5841-3, ISO 11318, ISO 27185, and ISO 27186.

Compliance is checked by inspection.


© ISO 2019 – All rights reserved
Documents
Document Sharing Hub
Full document details: BS EN ISO 14708-6:2022

## 12 Construction of the non-reusable pack

**12.1** The text in 12.1 of ISO 14708-1:2014 applies.

**12.2** The text in 12.2 of ISO 14708-1:2014 applies.

**12.3** The text in 12.3 of ISO 14708-1:2014 applies.

## 13 Markings on the active implantable medical device

**13.1** The text in 13.1 of ISO 14708-1:2014 does not apply.

**13.1.1** Each *implantable pulse generator* shall legibly and indelibly bear the name or trade name of the manufacturer, the model designator and, optionally, the family name of the device, the *serial number*, and the following particulars, as applicable.

If there is more than one input/output connector, then each connector shall be identified by a marking [see 28.8.2 a)].

Compliance is checked by inspection.

**13.1.2** Each lead and, if practicable and appropriate, each *adaptor* shall be permanently and visibly marked with an identification of the manufacturer, the *model designation*, and the *serial number* or when appropriate the batch number.

The *model designation* may be incorporated into the batch or *serial number*.

Compliance is checked by inspection.

**13.2** The text in 13.2 of ISO 14708-1:2014 applies.

**13.3** *Implantable pulse generator*s shall incorporate a code by which the device and the manufacturer can be unequivocally identified particularly with regard to the *model designation.* It shall be possible to read this code, when necessary, without the need for a surgical operation, using equipment generally available to the physician.

The markings identifying the manufacturer and the *model designation* of the *implantable pulse generator* may be in the form of radio-opaque figures or letters.

Compliance is checked by a procedure defined by the manufacturer in the accompanying documentation (see 28.6 of ISO 14708-1).

**13.4** The text in 13.4 of ISO 14708-1:2014 applies.

## 14 Protection from unintended biological effects being caused by the active implantable medical device

**14.1** The text in 14.1 of ISO 14708-1:2014 applies.

**14.2** The text in 14.2 of ISO 14708-1:2014 applies.

**14.3** The text in 14.3 of ISO 14708-1:2014 applies.

**14.4** The text in 14.4 of ISO 14708-1:2014 applies.

© ISO 2019 – All rights reserved

Documents
Document Sharing Hub
Full document details: BS EN ISO 14708-6:2022

## 15 Protection from harm to the patient or user caused by external physical features of the active implantable medical device

**15.1** The text in 15.1 of ISO 14708-1:2014 applies.

**15.2** The text in15.2 of ISO 14708-1:2014 applies.

## 16 Protection from harm to the patient caused by electricity

**16.1** The text in 16.1 of ISO 14708-1:2014 applies.

**16.2** ISO 14708-1 specifies a maximum current density at any *electrode* of no more than 0,75 μA/mm$^2$. This limitation applies to the combination of any net direct current allowed at the pace/sense *terminal*s and the *electrode* area of the lead conductor attached to such *terminal*. Because the construction of the leads (and therefore lead *electrode* area) is out of the control of the *implantable pulse generator* manufacturer, the intent of the ISO 14708-1 limit is met here by limiting the net direct current under the assumption that the *electrode* area is sufficiently large so as not to exceed the specified current density.

Except for its intended function, an *implantable pulse generator* when in use shall be electrically neutral. No direct current of more than 1 μA shall occur in any of the current pathways of the *CD lead terminal*s and the case and no more than 0,1 μA in the current pathways of any other *terminal*.

NOTE 1 For case *terminals*, the minimum *electrode* area required to achieve the maximum current density specified in ISO 14708-1 is approximately 1,5 mm$^2$, and for any other *terminal*, the area is approximately 0,15 mm$^2$. The typical *electrode* area of pace/sense leads in use today is in the range of 2 mm$^2$ to 10 mm$^2$, and 200 mm$^2$ to 600 mm$^2$ for *defibrillation electrodes*.

NOTE 2 It is assumed for the purposes of this clause that leads from any other manufacturer can be attached to the *implantable pulse generator* as a result of the use of common lead connector standards (e.g. ISO 5841-3, ISO 11318, or ISO 27186).

**CAUTION — Ensure that the high-voltage capacitors are discharged. Failure to use safe laboratory practices can result in severe electrical shock, resulting in personal injury or death to the persons handling the equipment or conducting the test.**

NOTE 3 For *ATP only devices*, the CD *terminal*s part of the requirement is not applicable.

Test: use a d.c. voltmeter, having a resolution of at least 2 μV, fed through a low-pass filter with a time constant (τ) of at least 10 s.

NOTE 4 As an example this low-pass filter (LP-filter) can be implemented by a fourth order low-pass RC filter with the elements built from 100 kΩ resistors and 10 μF metalized polyester capacitors. When using this type of filter, a d.c. voltmeter with an input resistance ≥40 MΩ will minimize measurement error.


© ISO 2019 – All rights reserved
Documents
Document Sharing Hub
Full document details: BS EN ISO 14708-6:2022

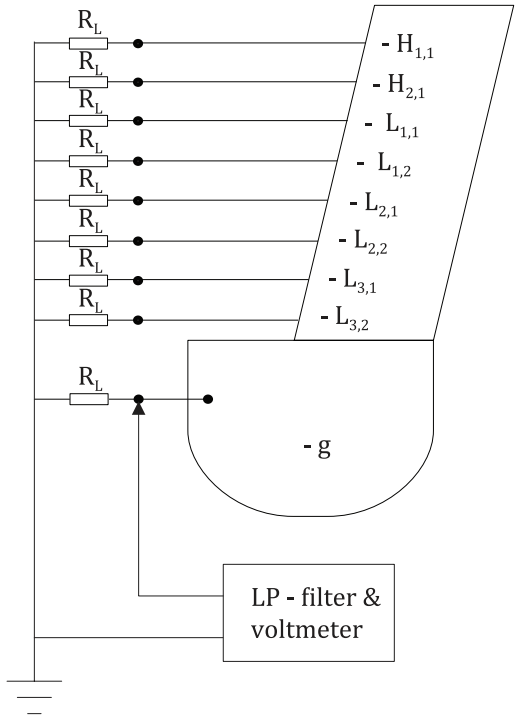


**Key**

| | |
|---|---|
| $H_{1,1}$ | high voltage *electrode* of DF-1 connector, RV coil |
| $H_{2,1}$ | high voltage *electrode* of DF-1 connector, SVC coil |
| $L_{1,1}$ | low voltage *electrode* of IS-1 connector, RV lead tip |
| $L_{1,2}$ | low voltage *electrode* of IS-1 connector, RV lead ring |
| $L_{2,1}$ | low voltage *electrode* of IS-1 connector, RA lead tip |
| $L_{2,2}$ | low voltage *electrode* of IS-1 connector, RA lead ring |
| $L_{3,1}$ | low voltage *electrode* of IS-1 connector, LV lead tip |
| $L_{3,2}$ | low voltage *electrode* of IS-1 connector, LV lead ring |
| g | case *terminal* |
| MD | measuring device |
| $R_L$ | load resistor |

NOTE 5 Figure 3 employs a nomenclature developed for modern *pacemaker* and *CRT-D* devices having more than two channels of pacing / sensing / defibrillation. ISO 14117:2019, Annex N provides additional details of the nomenclature.

**Figure 3 — Example test set-up for measurement of electrical neutrality of a *CRT-D* device**

The tachyarrhythmia therapy functions of the *implantable pulse generator* shall be inactive during the test, and, if applicable, the high-voltage capacitors shall be discharged. If the therapeutic function of the *implantable pulse generator* includes bradyarrhythmia pacing, the *implantable pulse generator* shall be set to the nominal settings recommended by the manufacturer (i.e. factory recommended settings) and the *pulse amplitude* and *pulse duration* shall be programmed to the highest available settings.

Each electrically conductive part of the *implantable pulse generator* in contact with body tissue when the device is implanted shall be identified and connected to a common bus through load resistors $R_L$ of 500 Ω ± 1 % (see Figure 3). For devices with fewer *terminal*s than shown in Figure 3, the associated resistors $R_L$ are not used.

Measure the average direct voltage across each of the load resistors (see Figure 3). Steady state conditions shall be reached before the measurement is made.

© ISO 2019 – All rights reserved

Documents
Document Sharing Hub
Full document details: BS EN ISO 14708-6:2022